416-8B (16B) Low Frequency Loudspeaker



DISCUSSION

"Not everything that counts can be counted and not everything that can be counted counts." ― Albert Einstein

Great Plains Audio has received many requests from professionals all around the world to once again manufacture transducers with AlNiCo magnets.

Why do our most legendary customers insist on motor structures with AlNiCo magnets? Because these customers know 'that sound'. The artists have performed for many years and know what gear is essential to achieve 'that sound'. Those who are in production or post production, responsible for adjusting a perfect mixture (mix) of all the performance parts, also know the equipment they need for 'that sound'.

Why is 'that sound' exclusive to speakers built with AlNiCo magnets? As our Great Plains Audio owner, Bill Hanuschak has stated, "We can't measure the flux density in a speaker motor when it is operating." In physics, this would be an example of the observer effect, which notes that some measurements of certain systems cannot be made without affecting the systems being measured. This observer effect concept is truly easier to grasp than the concept of Heisenberg's uncertainty principle (which offers an observer effect at the quantum level). But the explanation for the preferred sound of an AlNiCo magnet speaker over the sound of the same speaker with a ferrite magnet might only have a complex explanation, and may be best represented through quantum mechanics, for the uncertainty principle is inherent in the properties of all wave-like systems.

However, the explanation for the preferred sound of an AlNiCo magnet speaker over the sound of the same speaker with a ferrite magnet may be simple. Even though it hasn't been proven, some have theorized that although the flux density of a ferrite magnet motor is the same as the flux density of an equally charged AlNiCo magnet motor when both motors are at rest, once their voice-coils are charged with voltages from amplifiers, the flux density of the AlNiCo motor is more dynamic than that of the ferrite motor. Compared to the relatively firm flux density of a ferrite magnet or neodymium magnet, the flux density of an equally charged AlNiCo magnet may be decreased just enough by the peak voltages in a voice-coil to cause subtle decreases in the excitation of this voice-coil, which is physically attached to the membrane that produces the audible sound. (Maybe this is one reason why 'that sound' is exclusive to AlNiCo magnet speakers.)

GENERAL DESCRIPTION

Our model 416-8B (16B) is a 15 in. (381 mm) low frequency loudspeaker. This model's characteristic performance, including extremely smooth response and extraordinary linearity, makes it ideal for use in a wide-range of sound reinforcement and high-fidelity applications.

This loudspeaker features a structurally reinforced, die-cast, aluminum frame. The frame's 8 mounting bolt slots will accept a 0.25 in. (6 mm) diameter bolt or smaller, allowing the loudspeaker to be attached to almost any secure surface by either a front mounting or a rear mounting method.

Also featured is a 2.44 lbs. (1.1 kg) AlNiCo V magnet, which produces an at-rest gap flux density of 1.1 T. Another feature is the 3 in. (76 mm) diameter, edge-wound, copper-ribbon voice-coil. This voice-coil is attached to a high grade fiber cone. The cone is secured to the frame with a high compliance cloth surround. A complete 416-8B (16B) voice-coil-cone assembly is manufactured and sold by Great Plains Audio as a direct replacement part. Great Plains Audio's parts support assures the same dependable operation with our new products as our parts support has provided for many original Altec Lansing products.

The Thiele-Small parameters of our 416-8B (16B) loudspeaker can be used to model a variety of customized loudspeaker enclosure designs and predict the performance of these loudspeaker-enclosure systems before they are constructed.

Each member of our team at Great Plains Audio has over 20 years of experience in building high quality audio products. The goal of equaling or bettering the performance of the original Altec Lansing 416-8B is achieved with our Great Plains Audio 416-8B (16B) loudspeaker.

SPECIFICATIONS

Frequency Response: 25 Hz – 1,600 Hz (figure 1.)

Power Rating: 150 watts continuous band limited (20 Hz – 1,600 Hz) pink noise with a 6 dB crest factor according to AES Standard 2.

Sensitivity: 98 dB SPL from 1 watt input of band-limited pink noise 100 Hz to 1,000 Hz, measured on center axis at 1 meter from loudspeaker edge

Maximum Output: 117 dB SPL (at 1 M, calculated from Sensitivity and Power Rating)

Nominal Impedance: 8 ohms (416-8B) or 16 ohms (416-16B)

Thiele-Small Parameters

Free Air Resonance (f_S):	22.88 Hz
Equivalent Volume Compliance (V_{AS}):	18.280 cu. ft. (517.7 liters)
Total Q (Q_{TS}):	0.323
Electrical Q (Q_{ES}):	0.336
Mechanical Q (Q_{MS}):	8.188
Reference Efficiency (η_O):	1.76%
D.C. Resistance (R_E):	7.27 ohms
Peak Linear Displacement (X_{MAX}):	0.15 in. (4 mm)
Effective Piston Diameter:	12.75 in. (324 mm)
Effective Piston Area (S_D):	127.68 in.^{2} (823.7 cm^2)
Peak Linear Volume Displacement (V_D):	19.15 in.^{3} (0.314 l)
M(ms):	89.06 grams

Magnet Type:	Alnico V
Magnet Weight:	2.44 lbs. (1.1 kg)
Flux Density:	11,000 Gauss
Voice Coil:	3 in. (76 mm) diameter Edge-wound copper ribbon
Input Connections:	Spring-loaded push terminals
Finish:	Textured Black Powdercoat

Construction---

Frame:	Structurally reinforced die-cast aluminum
Cone:	Molded Fiber
Cone Suspension:	High-compliance cloth surround with mechanical resistance

Mounting Data---

Frame Diameter:	16.0 in. (406 mm)
Baffle Opening:	14-1/8 in. (359 mm)
Mounting Bolt Centers:	8 bolts equally spaced on a 15 in. (381 mm) diameter circle
Loudspeaker Depth (front mounting):	6.25 in. (159 mm)
Loudspeaker Depth (rear mounting):	7.0 in. (178 mm)

Weight

Net:	22 lbs. (9.97 kg)
Shipping:	25 lbs. (11.34kg)

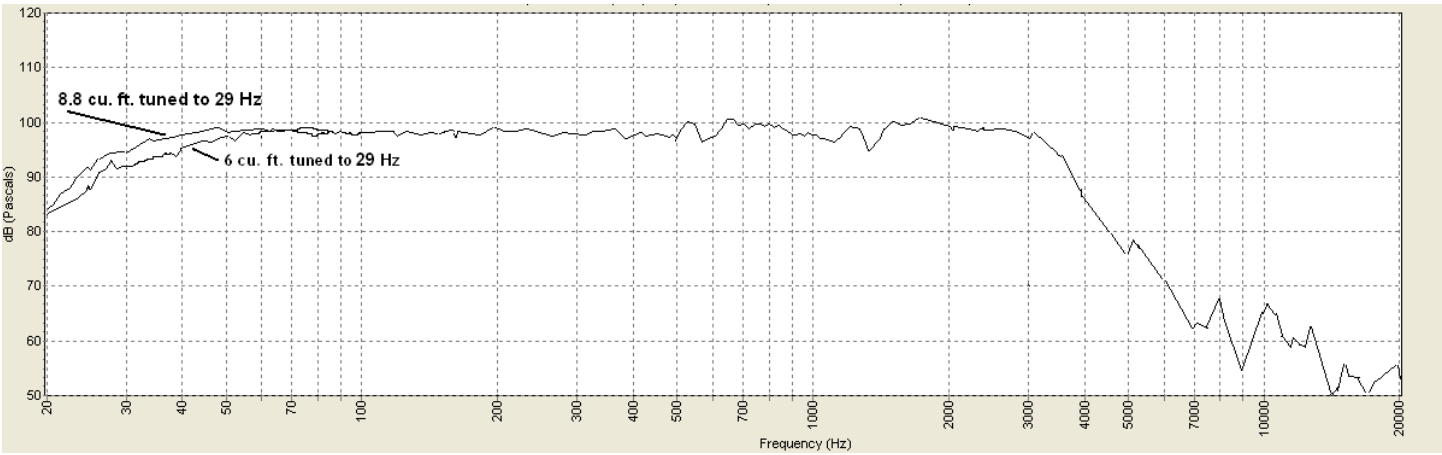

Figure 1.
(Calculated, based on Thiele-Small parameters from 1 watt input)

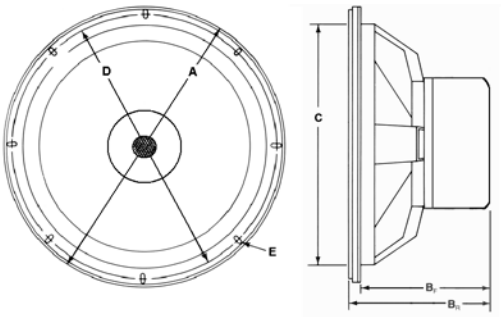

DIMENSIONS

A.) Outside Diameter:	16 in. (406 mm)
B_F.) Front Mount:	6.25 in. (159 mm)
B_R.) Rear Mount:	7 in. (178 mm)
C.) Cut-out Diameter:	14.125 in. (359 mm)
D.) Bolt Circle Diameter:	15 in. (381 mm)
E.) Bolt Hole Dimension:	¼ in. (6 mm) x ¾ in. (19 mm)

Great Plains Audio
7127 N.W. 3rd Street
Oklahoma City, OK 73127
405.789.0221
www.greatplainsaudio.com
"The Legacy Lives On" ™

© Great Plains Audio LLC
Specifications are subject to change without notice. Overall performance will be maintained or improved