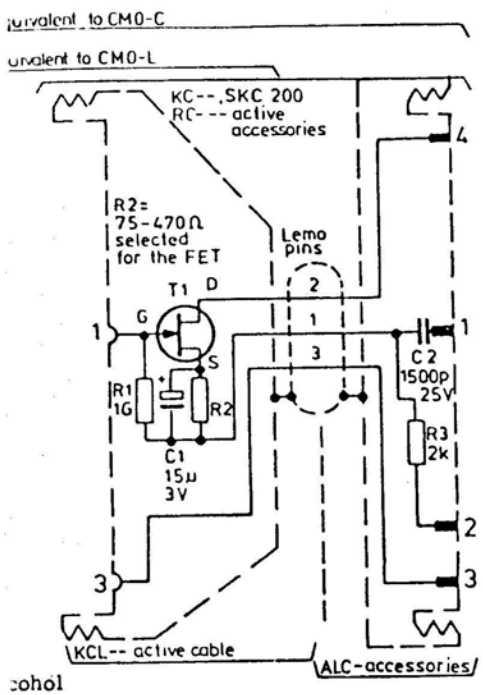

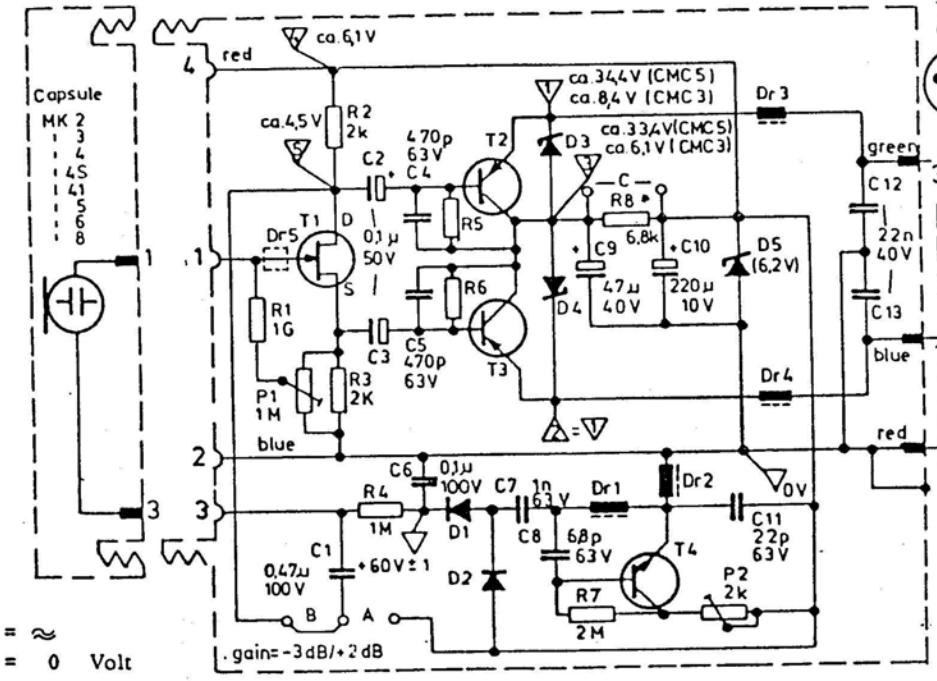

cohol
contacts,
fier
ward)

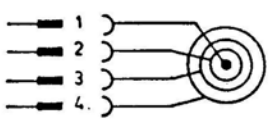

= ≈
= 0 Volt
= +60 Volt
= + 6,1 Volt

PHANTOM POWERING:
Supply current is sent along the two modulation leads and returns through cable shield.
Supply ripple max. 1 mV

COMBINATION
mplifiers CMC 3 or CMC 5 can

xample) capsule MK 4 to form the
CMC 34 and CMC 54 respectively
ved directly onto amplifier) or,
ctive accessory which in turn
apsule or,
valier microphone CM 03 C

AMPLIFIER TEST VALUES
(Test head MEC in place of capsule)
Output into 1 kΩ :
Noise voltage ≤ 2µV (CCITT weight.)
Max. output 850 mV for THD ≤ 0,5%
(f = 40 Hz - 20 kHz, standard powering)
bridge A or B determins total gain
A: + 2dB (blue dot amplifier)
B: - 3dB (standard version)

T 1 : FET (BC 264 or equiv.), selected
T 2/3 : pnp (BC 416 C or equiv.), selected and matched pair
T 4 : npn (BC 414 (or equivalent)
D 1/2 : 1N 4148 or equivalent
D 3/4/5 : Zener diode, 6.2 V, ≥ 400 mW
R5=R6=75kΩ ... 150kΩ tot. current consumpt.adj.
P1 : FET adjustment; P2 : U6 adjustment
Dr 5 : Ferrite bead
Minimum input impedance needed to measure circuit voltages {U1-5 : 10 MΩ; U6 : 1 GΩ

Standard values:

ca.	ca.	Rs		R8 *
48 V	4 mA	6,8 kΩ	DIN	6,8 kΩ
12 V	10 mA	680Ω	DIN	bridged at "C"
24 V	9 mA	1,2 kΩ	DIN prop.	1,5 kΩ

Recommended non-standard values (lowest current):

24 V	7 mA	4,7 kΩ	bridged at "C"
18 V	7 mA	3,3 kΩ	"
9 V	9 mA	270Ω	"

* R 8 determins the amplifier type
CMC 5 has R8 = 6,8 kΩ
CMC 3 has R8 = 6,8 kΩ , but bridged at "C"

Microphone amplifiers {CMC 3-- CMH3--; CMC 5-- CMH 5-C}

Active accessories KC--,SKC 200,RC---

Schalltechnik Dr.-Ing. Schoeps GmbH
Spitalstrasse 20 D-7500 Karlsruhe 41 Tel.(0721) 42011 u. 42016 Telex : 7826902
SCHOEPS