Manualslib.com - The Global Manuals Library

PIONEER CDJ-2000NXS SERVICE MANUAL



Quick Links

Service Mode
Error Display List
Disassembly
Exploded Views and Parts List

Table of Contents

SAFETY INFORMATION
Table of Contents
NOTES ON SOLDERING
NOTES ON REPLACING PARTS
SERVICE NOTICE
JIGS LIST
CHECK POINTS AFTER SERVICING
PCB LOCATIONS
OVERALL WIRING DIAGRAM
SIGNAL BLOCK DIAGRAM
POWER SUPPLY BLOCK DIAGRAM
POWER ON SEQUENCE
FAILURE JUDGEMENT OF THE PICKUP ASSY
TROUBLESHOOTING
DRIVE ASSY
OPERATIONAL WAVEFORMS
SETUP SEQUENCE
CONNECTION CONFIRMATION WITH THE PC
Check of load of JOG dial
Indication of various information
Error display list
ABOUT THE DEVICE
NECESSARY ITEMS TO BE NOTED
FIRMWARE UPDATE / RECOVERY
JOG DIAL ROTATION LOAD ADJUSTMENT
TEMPO ZERO POINT ADJUSTMENT
ITEMS FOR WHICH USER SETTINGS ARE AVAILABLE
PACKING SECTION
EXTERIOR SECTION
EXTERIOR SECTION PARTS LIST
CONTRAST TABLE
CONTROL PANEL SECTION
CONTROL PANEL SECTION LAYOUT/PARTS LIST
JOG DIAL SECTION

DISPLAY SECTION
SLOT IN MECHA SECTION
TM ASSY-S
SRVB ASSY (1/2)
SRVB ASSY (2/2), SPCN, INSW and SLMB ASSYS
MAIN ASSY (1/5)
MAIN ASSY (2/5)
MAIN ASSY (3/5)
MAIN ASSY (4/5)
MAIN ASSY (5/5)
JACB ASSY
SDCB ASSY
USBB ASSY
TFTB ASSY (1/2)
TFTB ASSY (2/2)
PNLB ASSY
JFLB ASSY
CDCB and SDSW ASSYS
SLDB and EUPB ASSYS
CNCT and KSWB ASSYS
JOGB and INDB ASSYS
POWER SUPPLY and ACIN ASSYS
WAVEFORMS
SRVB ASSY
SPCN, INSW and SLMB ASSYS
MAIN ASSY
JACB, SDCB and USBB ASSYS
TFTB ASSY
PNLB ASSY
JFLB, CDCB and SDSW ASSYS
SLDB, EUPB and CNCT ASSYS
KSWB, JOGB and INDB ASSYS
POWER SUPPLY and ACIN ASSYS
Other ManualsLib Projects

Pioneer

Service Manual

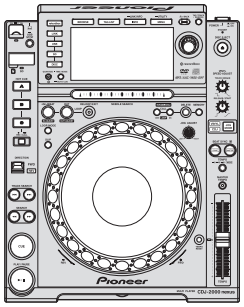

CDJ-2000NXS

ORDER NO.
RRV4356

MULTI PLAYER

CDJ-2000NXS

THIS MANUAL IS APPLICABLE TO THE FOLLOWING MODEL(S) AND TYPE(S).

Model	Type	Power Requirement	Remarks
CDJ-2000NXS	UXJCB	AC 120 V	
CDJ-2000NXS	SYXJ8	AC 220 V to 240 V	
CDJ-2000NXS	FLXJ	AC 110 V to 240 V	
CDJ-2000NXS	AXJ5	AC 220 V to 240 V	
CDJ-2000NXS	KXJ5	AC 220 V	

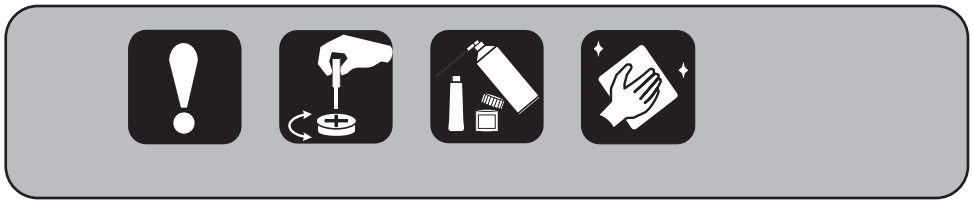

PIONEER CORPORATION 1-1, Shin-ogura, Saiwai-ku, Kawasaki-shi, Kanagawa 212-0031, Japan
PIONEER ELECTRONICS (USA) INC. P.O. Box 1760, Long Beach, CA 90801-1760, U.S.A.
PIONEER EUROPE NV Haven 1087, Keetberglaan 1, 9120 Melsele, Belgium
PIONEER ELECTRONICS ASIACENTRE PTE. LTD. 253 Alexandra Road, #04-01, Singapore 159936
ⓒPIONEER CORPORATION 2012

K-MZV SEPT. 2012 Printed in Japan

Downloaded from www.Manualslib.com manuals search engine

SAFETY INFORMATION

This service manual is intended for qualified service technicians; it is not meant for the casual do-it-yourselfer. Qualified technicians have the necessary test equipment and tools, and have been trained to properly and safely repair complex products such as those covered by this manual.
Improperly performed repairs can adversely affect the safety and reliability of the product and may void the warranty. If you are not qualified to perform the repair of this product properly and safely, you should not risk trying to do so and refer the repair to a qualified service technician.

WARNING

This product may contain a chemical known to the State of California to cause cancer, or birth defects or other reproductive harm.

Health & Safety Code Section 25249.6 - Proposition 65

This product contains mercury. Disposal of this material may be regulated due to environmental considerations. For disposal or recycling information, please contact your local authorities or the Electronics Industries Alliance: www.eiae.org.

The backlighting lamp of LCD in this equipment contains mercury. Disposal of this material may be regulated due to environmental considerations according to Local, State or Federal Laws.
For disposal or recycling information, please contact your local authorities or the Electronics Industries Alliance: www.eiae.org

IMPORTANT

THIS PIONEER APPARATUS CONTAINS LASER OF CLASS 1.
SERVICING OPERATION OF THE APPARATUS SHOULD BE DONE BY A SPECIALLY INSTRUCTED PERSON.

Laser Pickup specifications and Laser characteristics

For DVD	Wave length (typ)	: 655 nm
	Operation output	: 3 mW CW, Class 1
	Maximum output	: Class 1 (Under fault condition)
For CD	Wave length (typ)	: 790 nm
	Operation output	: 4.5 mW CW, Class 1
	Maximum output	: Class 1 (Under fault condition)

LABEL CHECK

for UXJCB and FLXJ
(Printed on the plate)

CLASS 1 LASER PRODUCT
APPAREIL Á LASER DE CLASSE 1

CLASS 1 LASER PRODUCT
APPAREIL Á LASER DE CLASSE 1
クラス1レーザ製品
클라스 원 레이저 제품
1类激光产品

for SYXJ8, AXJ5 and KXJ5
(Printed on the plate)

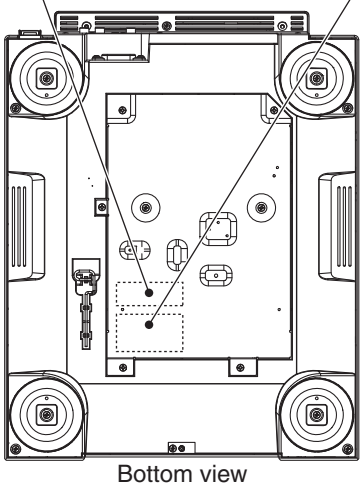

Bottom view

Additional Laser Caution

1. Laser Interlock Mechanism
The position of the switch (S9002) for detecting loading completion is detected by the system microprocessor, and the design prevents laser diode oscillation when the switch is not in LPS1 terminal side (when the mechanism is not clamped and LPS1 signal is high level.)
Thus, the interlock will no longer function if the switch is deliberately set to LPS1 terminal side.
(if LPS1 signal is low level).
In the test mode ∗ the interlock mechanism will not function.
Laser diode oscillation will continue, if pin 5 (pin 3) of AN22022A (IC7002) on the SRVB Assy is connected to GND, or else the terminals of Q7002 (Q7001) are shorted to each other (fault condition).

2. When the cover is opened, close viewing of the objective lens with the naked eye will cause exposure to a Class 1 laser beam.

Downloaded from www.Manualslib.com manuals search engine

CONTENTS

SAFETY INFORMATION 2
1. SERVICE PRECAUTIONS 5
1.1 NOTES ON SOLDERING 5
1.2 NOTES ON REPLACING PARTS 5
1.3 SERVICE NOTICE 6
2. SPECIFICATIONS 7
3. BASIC ITEMS FOR SERVICE 7
3.1 JIGS LIST 7
3.2 CHECK POINTS AFTER SERVICING 8
3.3 PCB LOCATIONS 9
4. BLOCK DIAGRAM 10
4.1 OVERALL WIRING DIAGRAM 10
4.2 SIGNAL BLOCK DIAGRAM 12
4.3 POWER SUPPLY BLOCK DIAGRAM 14
5. DIAGNOSIS 16
5.1 POWER ON SEQUENCE 16
5.2 FAILURE JUDGEMENT OF THE PICKUP ASSY 17
5.3 TROUBLESHOOTING 18
5.4 OPERATIONAL WAVEFORMS 31
5.5 SETUP SEQUENCE 32
5.6 CONNECTION CONFIRMATION WITH THE PC 33
6. SERVICE MODE 34
6.1 SERVICE MODE 34
6.2 ABOUT THE DEVICE 51
7. DISASSEMBLY 52
8. EACH SETTING AND ADJUSTMENT 67
8.1 NECESSARY ITEMS TO BE NOTED 67
8.2 FIRMWARE UPDATE / RECOVERY 67
8.3 JOG DIAL ROTATION LOAD ADJUSTMENT 68
8.4 TEMPO ZERO POINT ADJUSTMENT 69
8.5 ITEMS FOR WHICH USER SETTINGS ARE AVAILABLE 70
9. EXPLODED VIEWS AND PARTS LIST 72
9.1 PACKING SECTION 72
9.2 EXTERIOR SECTION 74
9.3 CONTROL PANEL SECTION 76
9.4 JOG DIAL SECTION 78
9.5 DISPLAY SECTION 80
9.6 SLOT IN MECHA SECTION 82
9.7 TM ASSY-S 84
10. SCHEMATIC DIAGRAM 86
10.1 SRVB ASSY (1/2) 86
10.2 SRVB ASSY (2/2), SPCN, INSW and SLMB ASSYS 88
10.3 MAIN ASSY (1/5) 90
10.4 MAIN ASSY (2/5) 92
10.5 MAIN ASSY (3/5) 94
10.6 MAIN ASSY (4/5) 96
10.7 MAIN ASSY (5/5) 98
10.8 JACB ASSY 100
10.9 SDCB ASSY 102
10.10 USBB ASSY 104
10.11 TFTB ASSY (1/2) 106
10.12 TFTB ASSY (2/2) 108
10.13 PNLB ASSY 110
10.14 JFLB ASSY 112
10.15 CDCB and SDSW ASSYS 114
10.16 SLDB and EUPB ASSYS 115
10.17 CNCT and KSWB ASSYS 116
10.18 JOGB and INDB ASSYS 117
10.19 POWER SUPPLY and ACIN ASSYS 118
10.20 WAVEFORMS 120

Downloaded from www.Manualslib.com manuals search engine

11. PCB CONNECTION DIAGRAM 122
11.1 SRVB ASSY 122
11.2 SPCN, INSW and SLMB ASSYS 127
11.3 MAIN ASSY 128
11.4 JACB, SDCB and USBB ASSYS 132
11.5 TFTB ASSY 134
11.6 PNLB ASSY 138
11.7 JFLB, CDCB and SDSW ASSYS 142
11.8 SLDB, EUPB and CNCT ASSYS 146
11.9 KSWB, JOGB and INDB ASSYS 148
11.10 POWER SUPPLY and ACIN ASSYS 150
12. PCB PARTS LIST 152

Downloaded from www.Manualslib.com manuals search engine

1. SERVICE PRECAUTIONS

1.1 NOTES ON SOLDERING

- For environmental protection, lead-free solder is used on the printed circuit boards mounted in this unit.
  Be sure to use lead-free solder and a soldering iron that can meet specifications for use with lead-free solders for repairs accompanied by reworking of soldering.

- Compared with conventional eutectic solders, lead-free solders have higher melting points, by approximately 40 ºC.
  Therefore, for lead-free soldering, the tip temperature of a soldering iron must be set to around 373 ºC in general, although the temperature depends on the heat capacity of the PC board on which reworking is required and the weight of the tip of the soldering iron.

Do NOT use a soldering iron whose tip temperature cannot be controlled.

Compared with eutectic solders, lead-free solders have higher bond strengths but slower wetting times and higher melting temperatures (hard to melt/easy to harden).

The following lead-free solders are available as service parts:
- Parts numbers of lead-free solder:
  GYP1006 1.0 in dia.
  GYP1007 0.6 in dia.
  GYP1008 0.3 in dia.

1.2 NOTES ON REPLACING PARTS

The part listed below is difficult to replace as a discrete component part.
When the part listed in the table is defective, replace whole Assy.

Assy Name	Parts that is Difficult to Replace			
	Ref No.	Function	Part No.	Remarks
CDCB Assy	IC5001	CDC SENSOR	AD7147ACPZ500RL7	IC with heat-pad
TFTB Assy	IC4018	BACK LIGHT CONTROL	TK61222CQ6	IC with heat-pad
USBB Assy	IC6301	USB CURRENT LIMIT IC	TPS2557DRB	IC with heat-pad
MAIN Assy	IC10	CPU	R5S77641N300BG	BGA package
	IC14	Authentication Coprocessor	337S3959-TBB	USON package (UltraSmallOutlineNon-lead)
	IC301	DSP	D810K013BZKB400 D810K013CZKB400	BGA package
	IC705	12V→1.2V DC/DC converter	BD9328EFJ	IC with heat-pad
SRVB Assy	IC7301	12V→USB5V DC/DC converter	BD9328EFJ	IC with heat-pad
	IC7302	12V→3.3V DC/DC converter	BD9328EFJ	IC with heat-pad
	IC7305	12V→5V DC/DC converter	BD9328EFJ	IC with heat-pad

The part listed below is difficult to replace as a discrete component part.
The replaceing method see remarks.

Assy Name	Parts that is Difficult to Replace			
	Ref No.	Function	Part No.	Remarks
JFLB Assy	V9201	JOG FL	DEL1058	As the JOG FL is integrated with the FL Holder (DNF1735) with the aid of two pieces of double-back tape (Z12-016), first remove the integrated JOG FL and FL Holder, attach a new JOG FL and an FL Holder, using two pieces of double-back tape, then mount them together. (Note: As the integrated JOG FL and FL Holder are exactly the same parts as those for the CDJ-2000, you can handle them in the same manner as with the CDJ-2000.)

5 6 7 8

Downloaded from www.Manualslib.com manuals search engine

1.3 SERVICE NOTICE

About the self-diagnostic functions for the drives

This unit has self-diagnostic functions for the drives in Service mode. Use the self-diagnostic functions to check the drives if the problem symptom pointed out by the customer is a malfunction related to the drives or if a drive-related error is logged in the error history.
For details on the self-diagnostic functions for the drives, see "[5] Drive Self-Diagnosis" and "[6] Contents of Drive Self-Diagnosis" in "6.1 SERVICE MODE."

About the Flash ROM (IC3) in the MAIN Assy

Replacement of the Flash ROM (IC3: DYW1814) in the MAIN Assy is not possible during service, because writing of the MAC address on the production line is required.
Therefore, the Flash ROM (IC3) is not supplied as a service part. If the Flash ROM is defective, replace the whole MAIN Assy.

About the PNLB and CNCT Assys

The PNLB Assy and CNCT Assy are wired with jumper leads. The PNLB Assy (Part No. DWX3338) is supplied as a service part with the CNCT Assy connected. The CNCT Assy is not supplied individually as a service part.

About work required after replacement of the Traverse Mechanism Assy (09SD)

After replacement of the traverse mechanism Assy (09SD), reset the LD lighting time to zero.
How to Reset: See "⑦ Drive LD life reset" in "[3] Indication of various information" in "6.1 SERVICE MODE."

About transfer of the accumulated LD lighting time data after replacement of the MAIN Assy

This unit is equipped with self-diagnostic functions for the drives in Service mode. The service-life check for the laser diode (for CDs/DVDs) among the self-diagnostic functions uses the accumulated lighting time for judgment. If it is 7,000 hours or less, the laser diode is judged as OK. The accumulated lighting time of the LD is stored in the Flash ROM (IC3: DYW1814) in the MAIN Assy. Therefore, after replacement of the MAIN Assy, the accumulated lighting time of the LD is cleared and proper judgment will not be possible after that. To avoid such a situation, when replacement of the MAIN Assy is required, transfer the LD accumulated lighting time data.
Before replacement, confirm the drive LD lighting time in Service mode and take note of the time value. After replacement is finished, enter Service mode then change the drive LD lighting time value to what you noted.
For details on how to confirm and change the LD lighting time, see "⑧ Drive LD life manual input" in "[3] Indication of various information" in "6.1 SERVICE MODE."

About the iPod cable supplied with this unit

An iPod cable is supplied with this unit. Be sure to use the iPod cable supplied with this unit to connect an iPad with this unit in order to determine the cause of a charging problem with an iPad. Do not use the standard cable supplied with iPhones for this purpose, because it does not meet the specifications required for iPads (a voltage drop may result, because it is thin).
The iPod cable supplied with this unit has been registered as service jig.

About backup of the UTILITY settings

As this unit is provided with user-settable UTILITY settings (such as the Play mode setting,) it is recommended that you back up the settings before starting repair. The settings can be stored for backup in a USB memory device or an SD card.
For details on how to back up and restore data, see "■ How to Back Up and Restore the Settings" in "8.5 ITEMS FOR WHICH USER SETTINGS ARE AVAILABLE ."

Downloaded from www.Manualslib.com manuals search engine

2. SPECIFICATIONS

Power consumption .....37 W
Power consumption (standby) .....0.4 W
Main unit weight..... 4.7 kg
External dimensions.....320 mm (W) × 106.5 mm (H) × 405.7 mm (D)
Tolerable operating temperature.....+5 °C to +35 °C
Tolerable operating humidity.....5 % to 85 % (no condensation)

Analog audio output (AUDIO OUT L/R)
Output terminals.....RCA terminal

Digital audio output (DIGITAL OUT)
Output terminals.....RCA terminal
Output type.....Coaxial digital (S/PDIF)

USB downstream section (USB)
Port..... Type A
Power supply.....5 V/2.1 A or less

USB upstream section (USB)
Port..... Type B

LAN (PRO DJ LINK)
Rating..... 100Base-TX

Control output (CONTROL)
Port.....Mini-jack

SD memory card section
File system ....Conforming to “SD Specifications Part 2 File System Specification Version 2.00”
Max. memory capacity.....32 GB

Main display
Display type..... Active matrix TFT liquid crystal display (LCD)
Screen size.....6.1-inch, wide
Supported languages ..... 18 languages

- The specifications and design of this product are subject to change without notice.

3. BASIC ITEMS FOR SERVICE

3.1 JIGS LIST

■ Jigs List

Jig Name	Part No.	Purpose of use / Remarks
CD test disc	STD-905	Drive self-diagnosis
DVD test disc	GGV1035 (DVDT-001)	Drive self-diagnosis
iPod cable	GGP1201	For use in determining a cause of charging problem for an iPad DDE1142 (accessory for the CDJ-2000NXS) registered as a special tool

■ Lubricants and Glues List



Name	Part No.	Remarks
Lubricating oil	GYA1001	Refer to “9.3 CONTROL PANEL SECTION”, “9.4 JOG DIAL SECTION”, “9.6 SLOTIN MECHA SECTION”, “9.7 TM ASSY-S”.
Lubricating oil	GEM1034	Refer to “9.4 JOG DIAL SECTION”.
Dyfree	GEM1036	Refer to “9.6 SLOTIN MECHA SECTION”.

■ Cleaning



Before shipping out the product, be sure to clean the following positions by using the prescribed cleaning tools.

Position to be cleaned	Name	Part No.	Remarks
Pickup lens	Cleaning liquied	GEM1004	Refer to "9.7 TM ASSY-S".
	Cleaning paper	GED-008	

Downloaded from www.Manualslib.com manuals search engine

3.2 CHECK POINTS AFTER SERVICING

Items to be checked after servicing

To keep the product quality after servicing, confirm recommended check points shown below.

No.	Procedure	Check points
1	Confirm the firmware version on Service Mode.	The version of the firmware must be latest. Update firmware to the latest one, if it is not the latest.
2	Confirm whether the customer complain has been solved. If the customer complain occurs with the specific disc, use it for the operation check.	The customer complain must not be reappeared. Audio and operations must be normal.
3	Playback a disc. (track search)	Audio, Search and operations must be normal.
4	Check the connection of each interface.	
	Playback data contained in the device connected to USB A.	Audio, Search and operations must be normal.
	USB B	The PC must be linked.
	Playback data contained in an SD card.	Audio, Search and operations must be normal.
	LINK	The PC must be linked.
5	Check output signals while the JOG dial or TEMPO slider is being operated.	Audio and operations must be normal.
6	Check the keys on the unit.	Check whether a product can be operated properly by buttons on the product.
7	Check the LCD display.	Check that there is no dirt or dust trapped inside the LCD display.
8	Check the appearance of the product.	No scratches or dirt on its appearance after receiving it for service.

Specific Items to be Checked

No.	Procedure	Check points
1	Confirm playback error rates at the innermost and outermost tracks by using the following disc. DVD test disc (GGV1025)	The error rates must be less than 5.0e-4. (This procedure can determine if the drive is degraded.)

See the table below for the items to be checked regarding audio.

Item to be checked regarding audio
Distortion
Noise
Volume too low
Volume too high
Volume fluctuating
Sound interrupted

Downloaded from www.Manualslib.com manuals search engine

3.3 PCB LOCATIONS

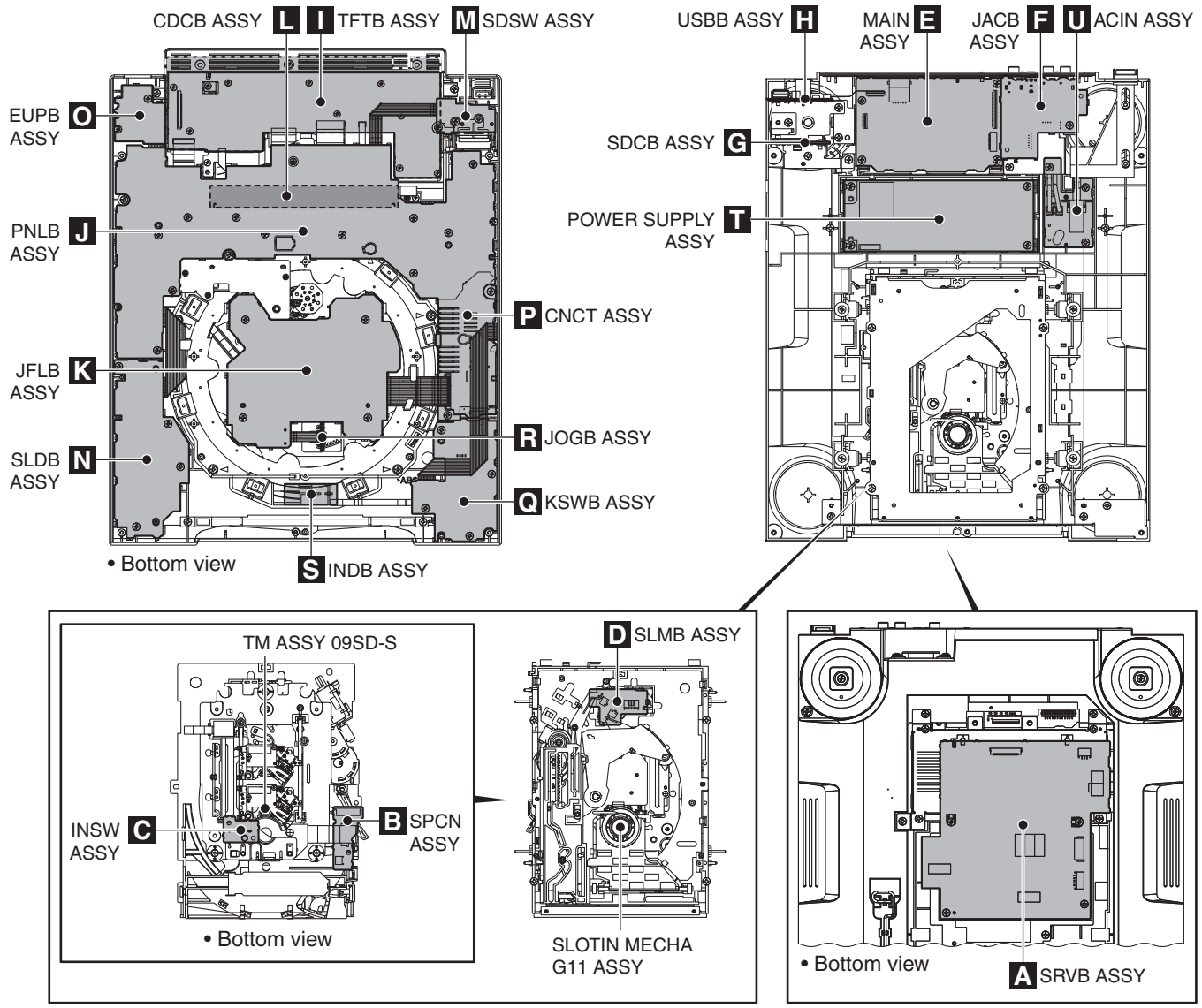

NOTES: ● *Parts marked by "NSP" are generally unavailable because they are not in our Master Spare Parts List.*
● *The ⚠ mark found on some component parts indicates the importance of the safety factor of the part. Therefore, when replacing, be sure to use parts of identical designation.*

LIST OF ASSEMBLIES

Mark	No.	Description	Part No.
	1	MAIN ASSY	DWX3312
NSP	1	TFTA ASSY	DWM2458
	2	TFTB ASSY	DWX3331
	2	CDCB ASSY	DWX3332
	2	SDCB ASSY	DWX3333
NSP	1	SRVA ASSY	DWM2459
	2	SRVB ASSY	DWX3334
	2	INSW ASSY	DWX3335
	2	SPCN ASSY	DWX3336
	2	INDB ASSY	DWX3337
NSP	1	PNLA ASSY	DWM2460
	2	PNLB ASSY	DWX3338
	2	KSWB ASSY	DWX3339
	2	SDSW ASSY	DWX3340
	2	EUPB ASSY	DWX3341
	2	SLDB ASSY	DWX3342
NSP	2	CNCT ASSY	DWX3343
NSP	1	JFLA ASSY	DWM2461
	2	SLMB ASSY	DWX3345
	2	ACIN ASSY	DWX3346
	2	JFLB ASSY	DWX3348
	2	JOGB ASSY	DWX3349
	2	JACB ASSY	DWX3350
	1	USBB ASSY	DWX3395
⚠	1	POWER SUPPLY ASSY	DWR1463
NSP		SLOTIN MECHA G11 ASSY	DXA2163
		TM ASSY 09SD -S	DXX2697

Downloaded from www.Manualslib.com manuals search engine

4. BLOCK DIAGRAM

4.1 OVERALL WIRING DIAGRAM

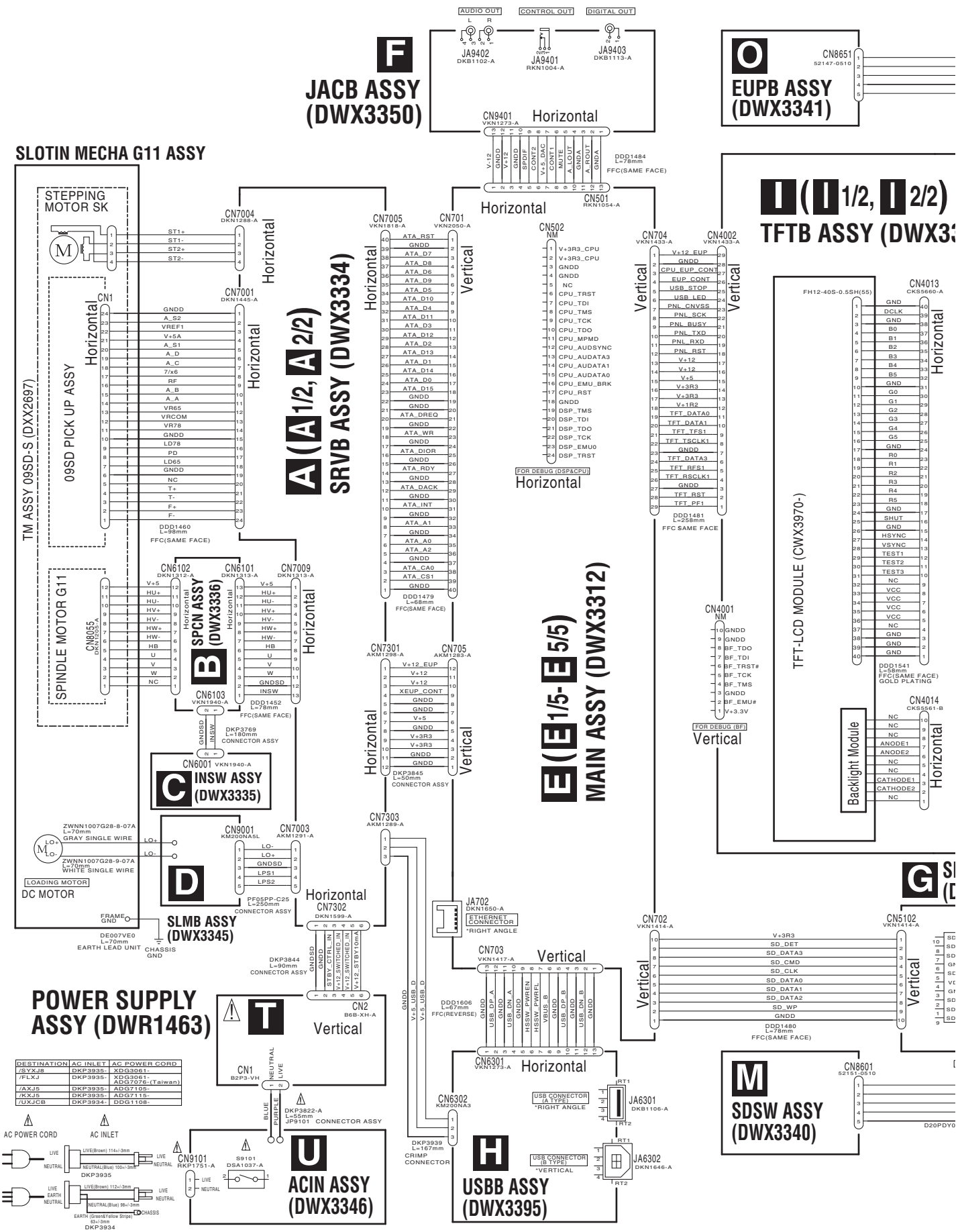

Downloaded from www.Manualslib.com manuals search engine

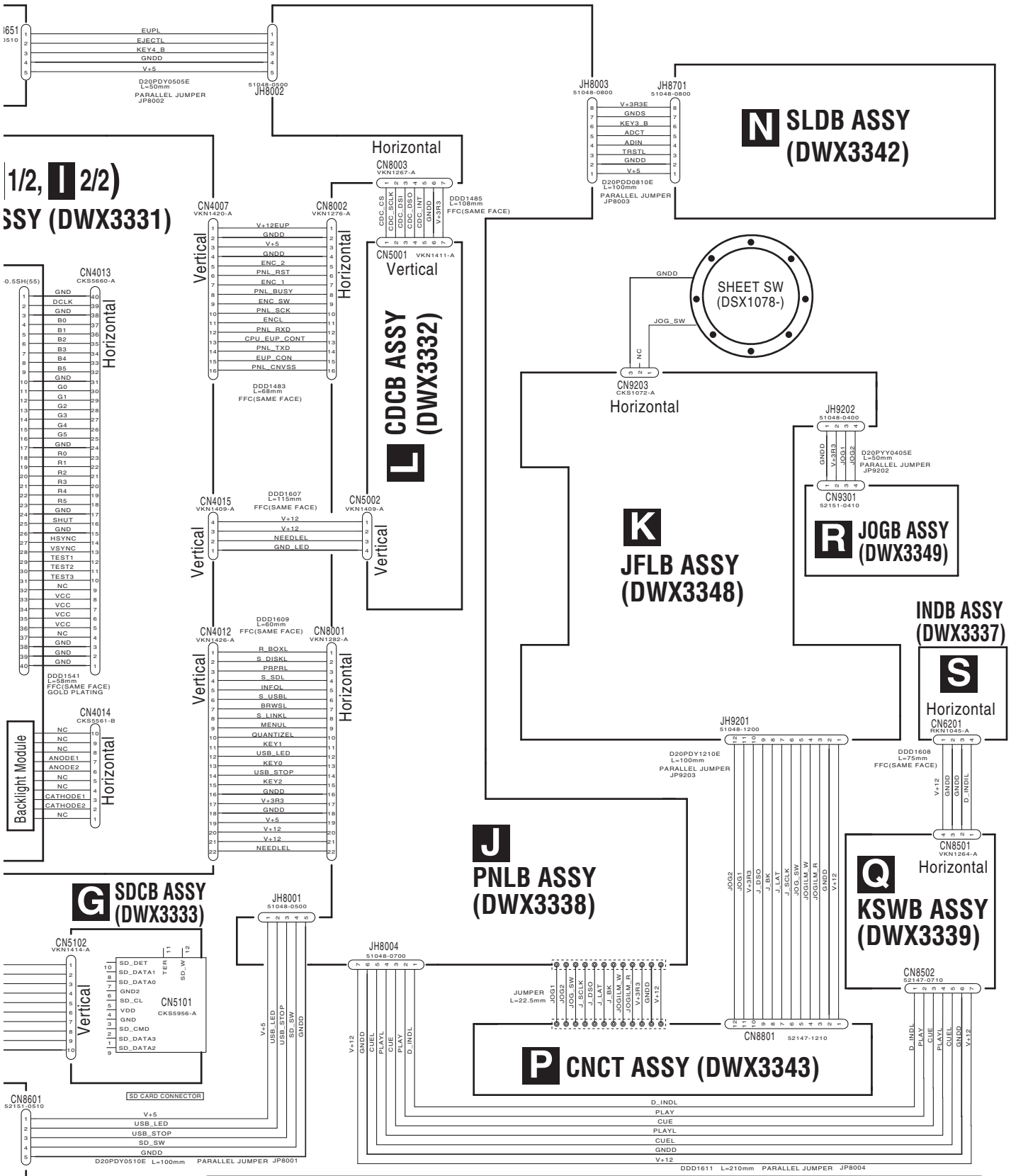

- When ordering service parts, be sure to refer to "EXPLODED VIEWS and PARTS LIST" or "PCB PARTS LIST".
- The ⚠ mark found on some component parts indicates the importance of the safety factor of the part. Therefore, when replacing, be sure to use parts of identical designation.
- : The power supply is shown with the marked box.

Downloaded from www.Manualslib.com manuals search engine

4.2 SIGNAL BLOCK DIAGRAM

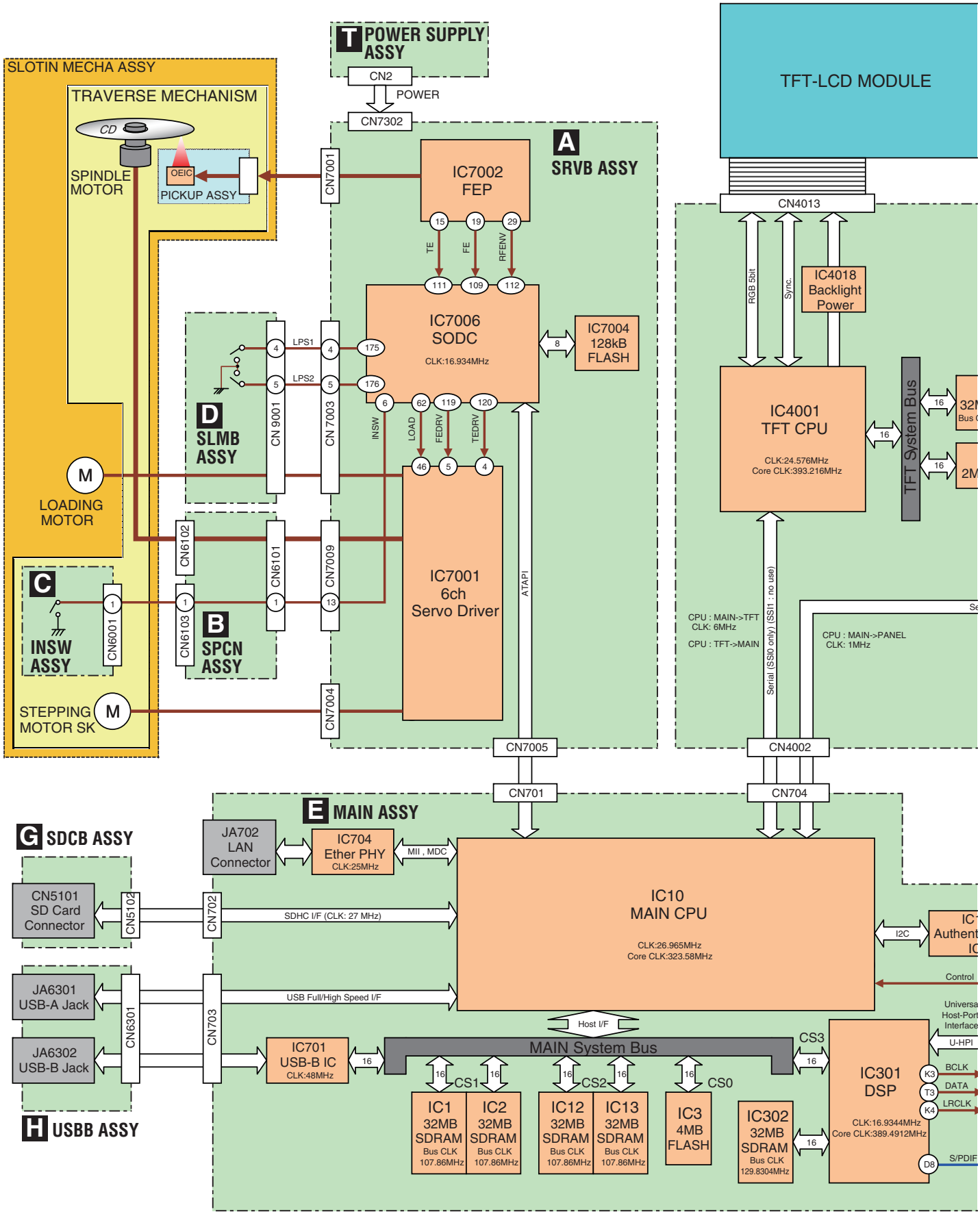

Downloaded from www.Manualslib.com manuals search engine

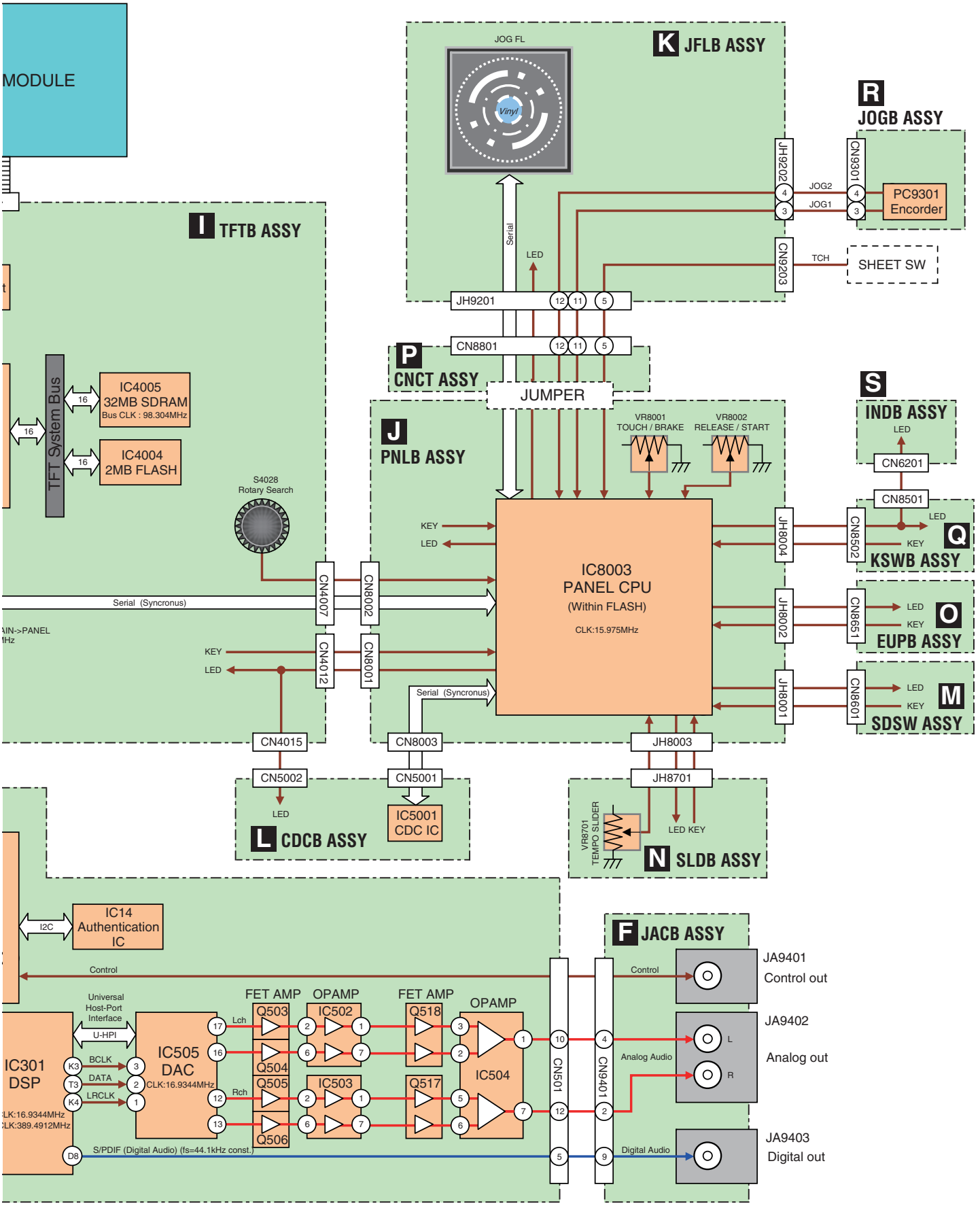

Downloaded from www.Manualslib.com manuals search engine

4.3 POWER SUPPLY BLOCK DIAGRAM

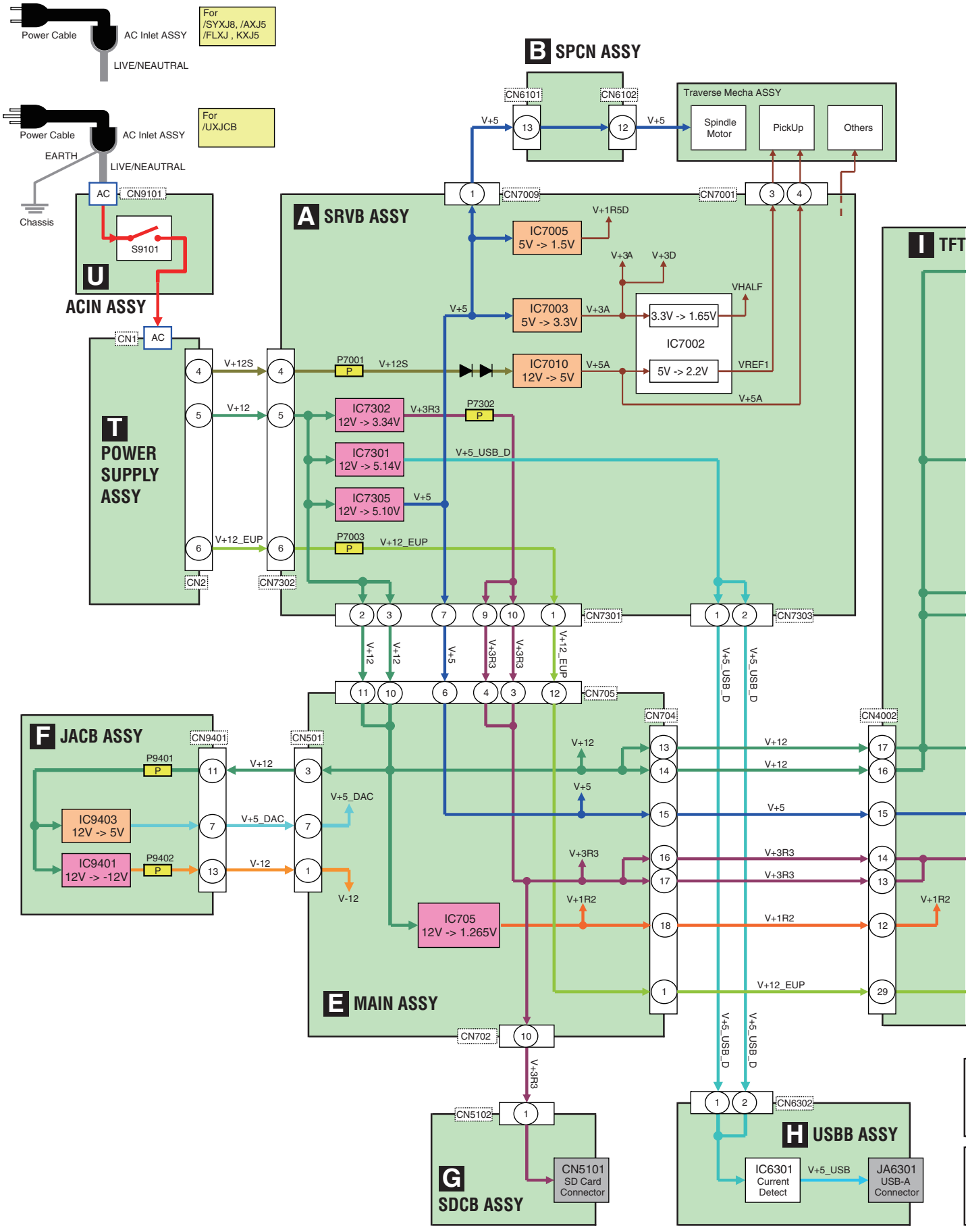

Downloaded from www.Manualslib.com manuals search engine

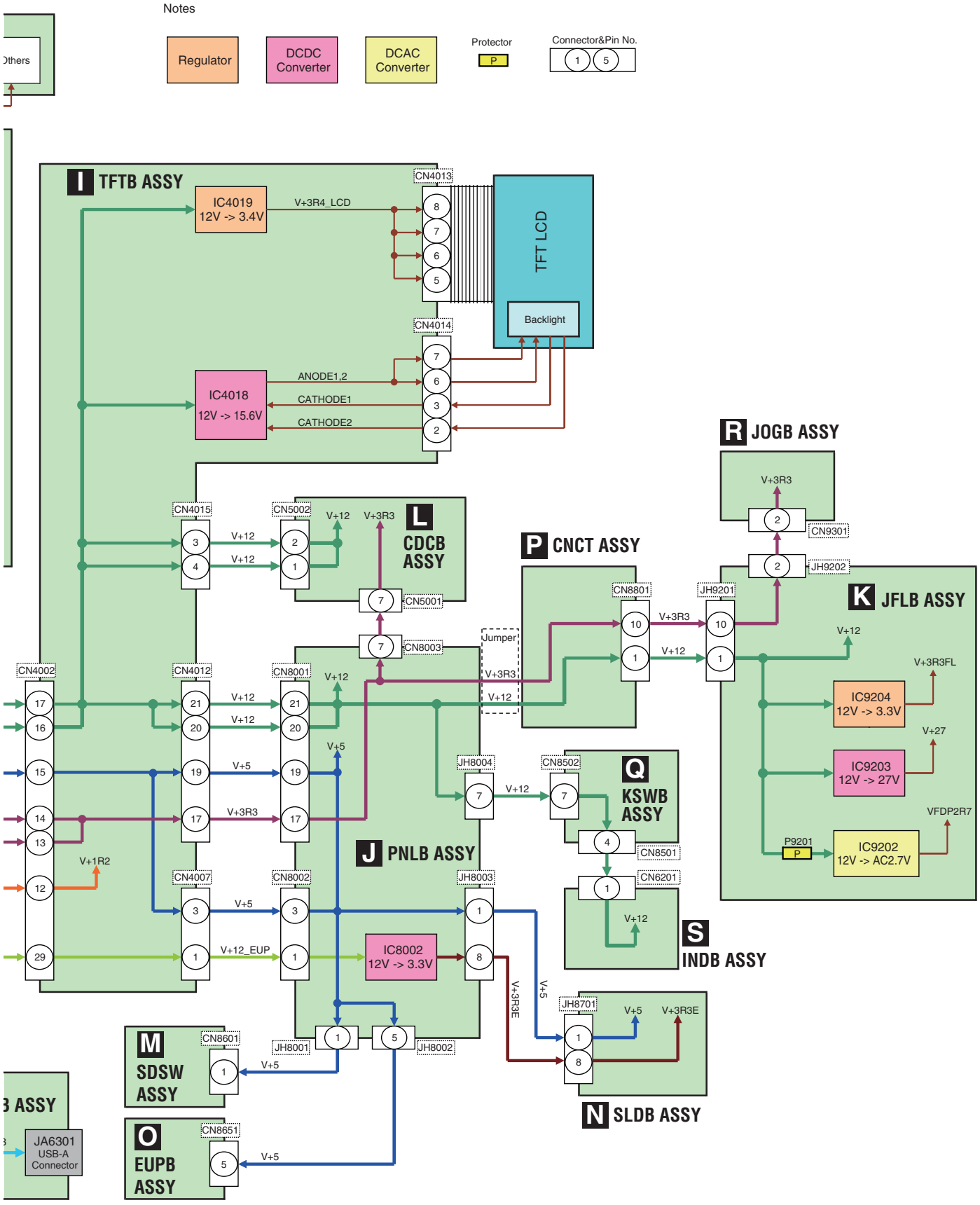

Downloaded from www.Manualslib.com manuals search engine

5. DIAGNOSIS
5.1 POWER ON SEQUENCE

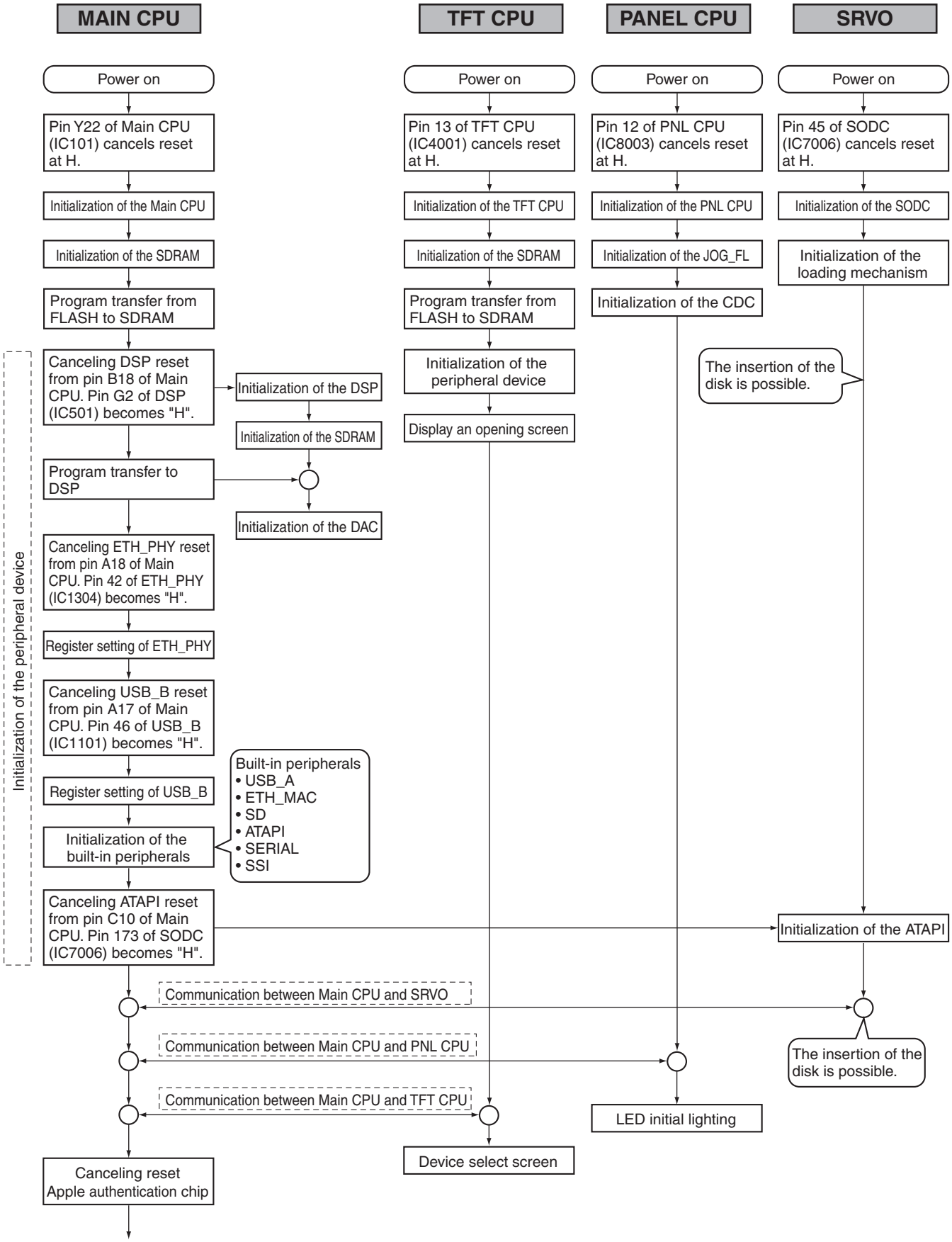

Downloaded from www.Manualslib.com manuals search engine

5.2 FAILURE JUDGEMENT OF THE PICKUP ASSY

This unit has self-diagnostic functions for the drives.
For drive-related malfunctions, first perform the self-diagnostics to check the drives in Service mode. If the results indicate any problem with the drives, check the following items:

● LD power after passing through the objective lens [mW]

SPEC: DVD 0.180 ± 0.03
CD 0.210 ± 0.03
Check method: Measure the LD power, using an optical power meter.
Failure judgment: A value out of the range of the specifications is judged as failure.

● LD current [mA]

SPEC: DVD TYP50 MAX70
CD TYP65 MAX75

Check method

Measure the voltage at the probe pad on the SRVB Assy (see the photo below), using a tester.
∗ To check lighting of each LD, follow the procedure indicated in "[7] Checking the servo operations of the drive unit" in "6.1 SERVICE MODE."
∗ Note that the LD may be degraded if the probes of a tester are applied to or pulled away from the probe pad with the LD ON.

Procedures

1. With the LD OFF, apply the probes of a tester to the reference probe pad (LDCHK) and 78CHK (CD side) or 65CHK (DVD side).
2. With the probes kept applied to the above-mentioned pads, turn the LD ON to measure the voltage between them.
3. After measurement, turn the LD OFF (ALL OFF) then pull the probes away.
4. Calculate the current value by dividing the measured voltage value by the resistance value mentioned below.
(For CDs: R7008 = 22 ohms, For DVDs: R7007 = 12 ohms)

Failure judgment:

If the calculated current value exceeds the maximum value, the LD has been degraded

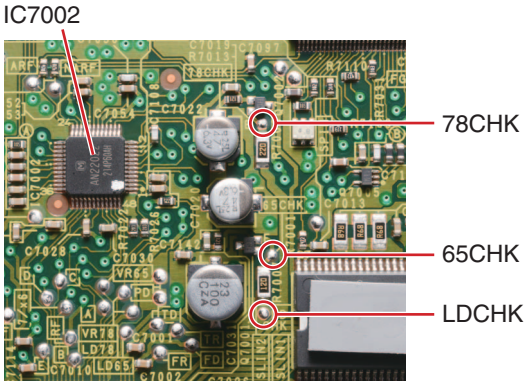

Fig.1 SRVB Assy

● Actuator resistance value [ohms]

Specifications on the focus side: 3.7 ±0.55
Specifications on the tracking side: 4.3 ±0.65

Check method

Directly measure the resistance value of the actuator, using a tester.
* Before measuring, short-circuit the LD short-circuit pads.
Note that the LD may be degraded if connection/disconnection of CN7001 is performed with the LD short-circuit pads open.

• Focus side
Disconnect* the FFC connected to the CN7001 then measure the resistance value between FFC pins 23 and 24.
• Tracking side
Disconnect* the FFC connected to the CN7001 then measure the resistance value between FFC pins 21 and 22.

Failure judgment:

A value out of the range of the specifications is judged as failure.

Downloaded from www.Manualslib.com manuals search engine

5.3 TROUBLESHOOTING

In this section, causes of failure, diagnostics points, and corrective measures can be searched for according to symptoms.
Before disassembling this unit, it is recommended to infer a failure point by performing a status check and referring to the error code.
For the relationship of each power-supply and signal system, see “4. BLOCK DIAGRAM,” and “10. SCHEMATIC DIAGRAM.”
If software of the product is updated before performing diagnostics, check that software updating has been performed properly before proceeding to diagnostics.
If software updating has not been performed properly, update the software, following the instructions in [9] Firmware update of “6.1 SERVICE MODE.”

Contents

[0] Prior Confirmation
[1] Failure in Startup
[2] Display (JOG FL/LED)
[3] Operations (SW/Volume/JOG/CDC/Rotary Encoder)
[4] USB (Type A/Type B), SD Card
[5] LAN
[6] ATAPI DRIVE
[7] AUDIO OUT
[8] CONTROL
[9] DRIVE Assy
[10] EUP Mode
[11] SERVICE MODE
[12] Error Codes

[0] Prior Confirmation

[0-1] Checking in Service Mode

No.	Cause	Diagnostics Point	Item to be Checked	Corrective Action	Reference
1	————	————	Check for the location of a defect in Service mode.	See the section describing locations of defects in this manual.	6.1 SERVICE MODE

[0-2] Checking the Alarm Port

If “[0-1] Checking in Service Mode” is performed, this check is not required.

No.	Cause	Diagnostics Point	Item to be Checked	Corrective Action	Reference
1	————	Alarm port on the MAIN Assy (Fig. 1)	Check the output waveforms from the alarm port.	If an output waveform is judged to be improper, see the section describing locations of defects in this manual.	6.1 SERVICE MODE _[8] Outputs of the Alarm Port

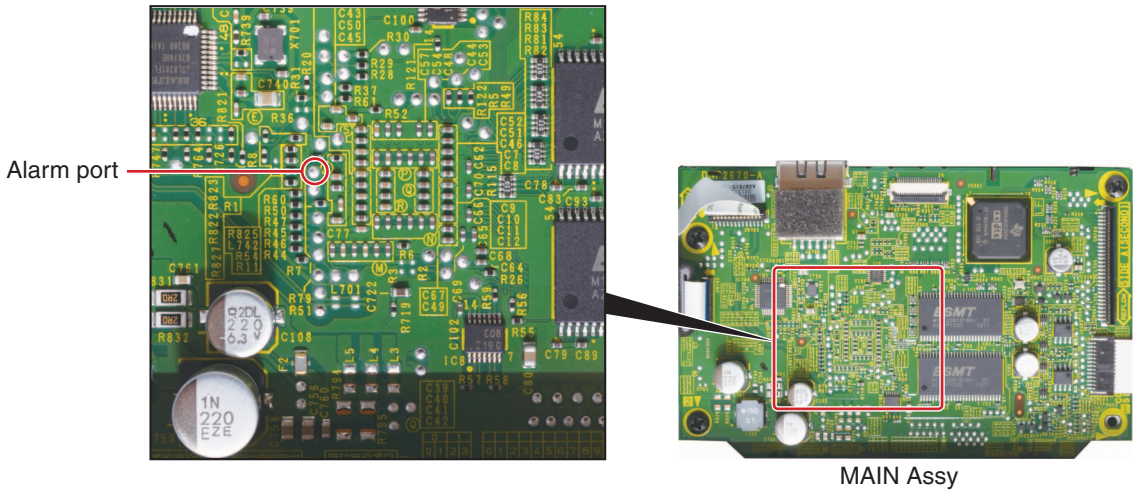

Fig. 1

[0-3] Checking Cables

No.	Cause	Diagnostics Point	Item to be Checked	Corrective Action	Reference
1	Disconnection, breakage, or loose connection of cables	Cables	Check that all the cables are securely connected. Check that there is no breakage in the cables.	Securely connect the cables. If a cable is broken, replace it.	4.1 OVERALL WIRING DIAGRAM 10. SCHEMATIC DIAGRAM

Downloaded from www.Manualslib.com manuals search engine

[1] Failure in Startup

[1-1] No power

No.	Cause	Diagnostics Point	Item to be Checked	Corrective Action	Reference
1	The SW power does not function properly.	SRVB Assy	Check V+12_EUP.	If V+12_EUP (CN7301 pin_1) is not output, the SW power is defective. Replace it.	————
2	The SW power does not function properly.	PNLB Assy	Check V+3R3_PNL.	The regulator IC (IC8002) may be loosely connected with its peripheral devices or a part may be defective. Correct loose connection. If the symptom persists, replace the defective part.	————
3	The EUP control unit does not function properly.	SRVB Assy	Check the EUP_CONT signal.	If the signal is L, check the output of the SW power. If V+12 (CN7301 pin_2) is not output, the SW power is defective. Replace it. If the signal is H, see [10] EUP Mode.	————
4	Various power supply ICs do not function properly.	SRVB Assy, MAIN Assy	Check each power-supply IC.	The regulator IC and its peripheral devices for each power supply may be loosely connected or a part may be defective. Correct loose connection. If the symptom persists, replace the defective part.	————

[1-2] Indications on the LCD

Check the indications on the LCD.

Nothing is displayed on the LCD. (Black screen)

No.	Cause	Diagnostics Point	Item to be Checked	Corrective Action	Reference
1	Power supply for the backlight is not input properly.	TFTB Assy	Check the connection on the V+12T line and check the mounting status of the peripheral parts of the backlight power circuit.	The V+12T line may be loosely connected or the backlight power circuit may be defective. Correct loose connection. If the symptom persists, replace the defective part.	10.11, 10.12 TFTB ASSY

Indications on the LCD are in white screen.

No.	Cause	Diagnostics Point	Item to be Checked	Corrective Action	Reference
1	The TFT CPU does not function properly.	TFTB Assy	Check the power supply and signals around the TFT CPU. • V+3R3T_BF, V+1R2_BF • RESET_TFT • BUSCLK (Approx. 98 MHz)	Diagnose the TFT CPU and its peripherals, referring to [12-5] E-7023: GUI CPU ERROR.	————

Startup stops with the “Pioneer” logo displayed.

No.	Cause	Diagnostics Point	Item to be Checked	Corrective Action	Reference
1	Communication between the MAIN CPU and TFT CPU could not be established.	TFTB Assy, MAIN Assy	Check the serial communication cable connection between the MAIN CPU and TFT CPU.	Diagnose the TFT CPU and its peripherals, referring to [12-5] E-7023: GUI CPU ERROR.	————

[2] Display (JOG FL/LED)

The JOG FL and the LEDs are controlled by the PANEL CPU (IC8005).

[2-1] The JOG FL does not light.

No.	Cause	Diagnostics Point	Item to be Checked	Corrective Action	Reference
1	Power is not supplied properly.	JFLB Assy	Check the power-supply voltages (V+3R3, VFDP2R7_F1, VFDP2R7_F2, and V+27) of the FL.	Each power-supply may be loosely connected or may be defective. Correct loose connection. If the symptom persists, replace the defective part.	————
2	Defective control signal	JFLB Assy	Check that the FL control line is properly connected in the JFLB ASSY. • J_SCLK • J_BK • J_LAT • J_DSO	Check the connection and correct loose connection. As the JOG FL is controlled by the PANEL CPU, if no signal is output, check the PANEL CPU.	————
3	Defective JOG FL	————	If the symptom persists after the above corrections,	Replace the JOG FL.	————

Downloaded from www.Manualslib.com manuals search engine

[2-2] An LED does not light.

No.	Cause	Diagnostics Point	Item to be Checked	Corrective Action	Reference
1	Defective LEDs	LED in question	Check that soldering at the LED in question is properly made. If it is OK, check that the forward voltage (2.2 - 2.7 V) is present at both ends of the LED.	Correct any defective soldering. If the forward voltage is present, then the LED itself is defective. Replace it.	————
2	Defective drive circuit	Transistor in question	Check that the control signal for the LED in question is output from the PANEL CPU (IC8003).	If the LED does not light even if the control signal is output properly, then the transistor is defective. Replace it.	————
3	Defective PANEL CPU	PNLB Assy	If the symptom persists after the above corrections.	Check the connection between the PANEL CPU (IC8003) and the LED in question. If the connection is OK, the port may be damaged. Replace it.	————

[3] Operations (Keys/variable controls/JOG)

As operations of all keys, variable controls, and JOG dial can be checked in Service mode, it is recommended to check operations of those controls in Service mode before proceeding to the subsequent checks. (For details, refer to 6. SERVICE MODE.)

[3-1] No key functions.

The PLAY, CUE, AUTO BEAT LOOP, BEAT SELECT, REV, LOOP IN, LOOP OUT, or RELOOP key does not function (direct input).

No.	Cause	Diagnostics Point	Item to be Checked	Corrective Action	Reference
1	Defective SW	PNLB Assy	Check if there is loose connection on the signal line from the PANEL CPU (IC8003) up to the SW.	If there is no loose connection and if the signal does not become L when the SW is pressed, that SW is defective. Replace it.	————
2	Defective PANEL CPU	PNLB Assy	If the symptom persists after the above corrections.	Check the connection of the PANEL CPU (IC8003). If the connection is OK, the port may be damaged. Replace it.	————

Other keys (except for the USB STOP key) do not function. (Because of A/D input, multiple SWs are connected to the same port on the PANEL CPU.

No.	Cause	Diagnostics Point	Item to be Checked	Corrective Action	Reference
1	Defective SW	PNLB Assy	Check if there is loose connection on the signal line from the PANEL CPU (IC8003) up to the SW.	If other SWs connected to the same port on the PANEL CPU (IC8003) function properly and if connection is properly made, replace the SW.	————
2	Defective PANEL CPU	PNLB Assy	If the symptom persists after the above corrections.	Check the connection of the PANEL CPU (IC8003). If the connection is OK, the port may be damaged. Replace it.	————

The USB STOP key does not function. (The signal from the USB STOP key is input to the MAIN CPU.)

No.	Cause	Diagnostics Point	Item to be Checked	Corrective Action	Reference
1	Defective SW	SDSW Assy, MAIN Assy	Check if there is loose connection on the signal line from the MAIN CPU (IC10) up to the SW.	If there is no loose connection and if the signal does not become L when the SW is pressed, that SW is defective. Replace it.	————
2	Defective MAIN CPU	MAIN Assy	If the symptom persists after the above corrections.	The MAIN CPU (IC10) is defective. Replace the MAIN Assy.	————

[3-2] Variable controls not controllable

Tempo slider not controllable

No.	Cause	Diagnostics Point	Item to be Checked	Corrective Action	Reference
1	Defective Tempo slider	SLDB Assy, PNLB Assy	Check the waveform of signals on the signal line (ADCT, ADIN).	If the voltage on the signal line (ADIN) fluctuates within the range of 0–3.3 V, with 1.65 V at the center, go to Step 2. If it does not, the Tempo slider (VR8701) is defective. Replace it.	————
2	Defective PANEL CPU	PNLB Assy	If the symptom persists after the above corrections.	Check the connection of the PANEL CPU (IC8003). If the connection is OK, the port may be damaged. Replace it.	————

TOUCH/BRAKE and RELEASE/START not controllable

No.	Cause	Diagnostics Point	Item to be Checked	Corrective Action	Reference
1	Defective VOL	PNLB Assy	Check the connections of and waveforms of signals on the signal lines (TCH/BRK) and (RELS/ST).	If the voltage on the signal line (TCH/BRK and RELS/ST) fluctuates within the range of 0–3.3 V, go to Step 3. If it does not, the TOUCH/BRAKE (VR8001) and RELEASE/START (VR8002) are loosely connected or defective. Connect them properly or replace them.	————
2	Defective PANEL CPU	PNLB Assy	If the symptom persists after the above corrections.	Check the connection of the PANEL CPU (IC8003). If the connection is OK, the port may be damaged. Replace it.	————

Downloaded from www.Manualslib.com manuals search engine

[3-3] The NEEDLE SEARCH does not work.

No response when the NEEDLE SEARCH is touched

No.	Cause	Diagnostics Point	Item to be Checked	Corrective Action	Reference
1	Loose connections in the communication line	CDCB Assy	Check the connections of the peripheral circuits of the CDC (IC5001).	The communication line may be loosely connected. Correct it if it is.	————
2	Defective CDC	PNLB Assy	Check that the signal from Pin 5 of CN8003 changes when the NEEDLE SEARCH pad is touched. (When the pad detects touching by a finger, this signal is first output from CDC to the PANEL CPU.)	The CDC (IC5001) may be defective. Replace it.	————
3	Defective PANEL CPU	PNLB Assy	If the symptom persists after the above corrections.	Check the connection of the PANEL CPU (IC8003). If the connection is OK, the port may be damaged. Replace it.	————

[3-4] The rotary encoder does not work.

No response when the rotary encoder is operated

No.	Cause	Diagnostics Point	Item to be Checked	Corrective Action	Reference
1	Loose connections in the signal line or defective SW	TFTB Assy, PNLB Assy	Check the connections of the signal lines for ENC_SW, ENC1, and ENC2. When the SW is pressed, the ENC_SW signal must become L, and when it is turned, the waveforms of the signal lines for ENC1 and ENC2 must change.	The PANEL CPU (IC8003) and SW may be loosely connected or they may be defective. Reconnect them securely. If the symptom persists, replace them.	————
2	Defective PANEL CPU	PNLB Assy	If the symptom persists after the above corrections.	Check the connection of the PANEL CPU (IC8003). If the connection is OK, the port may be damaged. Replace it.	————

[3-5] Abnormalities regarding the JOG dial

Turning of the JOG dial is not detected

No.	Cause	Diagnostics Point	Item to be Checked	Corrective Action	Reference
1	Defective photo interrupter or PANEL CPU	JOGB Assy, JFLB Assy, CNCT Assy, PNLB Assy	Check the waveforms of the signal lines (JOG1/JOG2).	If no waveform can be confirmed, the photo interrupter (PC9301) may be defective. Replace it. If a waveform can be confirmed, the signal line may be loosely connected or the PANEL CPU (IC8003) may be defective. Reconnect the signal line. If the symptom persists, replace it.	10.20 WAVEFORMS ⑩ ⑪
2	Defective encoder plate	JOG Assy	Check if the encoder plate has come off Gear A or is dirty.	If it has come off, adhere it at its original position. If it is dirty, replace it with a new one.	————

Pressing on the JOG dial cannot be detected.

No.	Cause	Diagnostics Point	Item to be Checked	Corrective Action	Reference
1	Defective photo interrupter or PANEL CPU	JOGB Assy, JFLB Assy, CNCT Assy, PNLB Assy	Check the waveform of the signal on the signal line (JOG_SW) when the JOG dial is pressed.	If the signal on the signal line (JOG_SW) is not set to L when the JOG dial is pressed, the Sheet SW may be defective. Replace it. If the signal line is set to L, the signal line may be loosely connected or the PANEL CPU (IC8003) may be defective. Reconnect the signal line. If the symptom persists, replace it.	————
2	Defective SW ring and JOG holder	JOG Assy	Check if there is any foreign object between the SW ring and JOG holder.	Remove any foreign object, if present.	————
			Check if the cushions that are adhered to the JOG holder and SW ring have worn out.	Replace the SW cushion with a new one.	————

Noise is heard when the JOG dial is turned.

No.	Cause	Diagnostics Point	Item to be Checked	Corrective Action	Reference
1	Defective JFLB Assy or gears	JOG Assy	Check if the JOG FL of the JFLB has been shifted upward from the holder.	The JOG FL may interfere with JOG A. Replace the JFLB Assy.	————
			There may be any scratches on the 3 gears or some foreign object between the gears.	If there are any scratches, replace the scratched gear with a new one. If there is any foreign object, remove it then replace the gears with new ones. After that, check that the JOG adjustment value is within the reference range, referring to “8.3 JOG DIAL ROTATION LOAD ADJUSTMENT.”	————

Downloaded from www.Manualslib.com manuals search engine

The JOG dial turns too freely. (The load value for the JOG dial is outside the specified range.)

No.	Cause	Diagnostics Point	Item to be Checked	Corrective Action	Reference
1	Improper adjustment or assembly of the JOG dial	JOG Assy	Check that the load value for the JOG dial is within the specified range, referring to "Measuring method" in "8.3 JOG DIAL ROTATION LOAD ADJUSTMENT."	If it is outside the specified range, adjust the position of the Adjust Plate to change the load value for the JOG dial, referring to "How to Adjust" in "8.3 JOG DIAL ROTATION LOAD ADJUSTMENT."	————
				During the above adjustment, if the upper-limit adjustment position of the Adjust Plate is reached, oil mayhave been spattered on the Adjust Plate. Replace the washer, gear, and cam plate with new ones, then reassemble. After replacement, adjust the position of the Adjust Plate to change the load value for the JOG dial.	————

Resistance to turning the JOG dial is too strong. (The load value for the JOG dial is outside the specified range.)

No.	Cause	Diagnostics Point	Item to be Checked	Corrective Action	Reference
1	Improper adjustment of the JOG dial or defective washer, gear, or cam plate	JOG Assy	Check that the load value for the JOG dial is within the specified range, referring to "Measuring method" in "8.3 JOG DIAL ROTATION LOAD ADJUSTMENT."	If it is outside the specified range, adjust the position of the Adjust Plate to change the load value for the JOG dial, referring to "How to Adjust" in "8.3 JOG DIAL ROTATION LOAD ADJUSTMENT."	————
				During the above adjustment, if the lower-limit adjustment position of the Adjust Plate is reached, shavings from the worn-out washer may have increased the friction. Replace the washer, gear, and cam plate with new ones, then reassemble. After replacement, adjust the position of the Adjust Plate to change the load value for the JOG dial.	————

The ADJ KNOB does not work or does not stop at the intended position.

No.	Cause	Diagnostics Point	Item to be Checked	Corrective Action	Reference
1	Improper adjustment or assembly of the JOG dial	JOG Assy	Check if the plate spring of the JOG holder is worn out or deformed.	Replace the JOG holder. After replacement, adjust the position of the Adjust Plate to change the load value for the JOG dial.	————
			Check if there is any foreign object in the link section (gears).	Remove the foreign object. During reassembly, pay attention to the position of the cam plate. After replacement, adjust the position of the Adjust Plate to change the load value for the JOG dial.	————

[4] USB (Type A/Type B), SD Card

[4-1] No communication via the USB connector (Type A)

Check the following, with a USB device connected to the USB A connector.

No.	Cause	Diagnostics Point	Item to be Checked	Corrective Action	Reference
1	Loose connections in the communication line.	Between USBA Assy and MAIN Assy	Check the connection of the USB communication line.	If connection is improper, resolder it. If connection is proper, go to 2.	————
2	V+5_USB_HOST_VBUS is defective.	MAIN Assy	Check V+5_USB_HOST_VBUS of the USB power supply.	If V+5_USB_HOST_VBUS cannot be confirmed, go to 3. If V+5_USB_HOST_VBUS can be confirmed, go to 4.	————
3	The USB POWER SW IC or its control signal is defective.	USBB Assy	Check the CPU_USB_HSTPWREN and CPU_USB_HSTPWRFL signals from the USB POWER SW IC (IC6301).	If the CPU_USB_HSTPWREN signal does not become H, check the connection. If the connection is OK, then the MAIN CPU (IC10) is defective. Replace the MAIN Assy. If the CPU_USB_HSTPWRFL signal does not become H, the USB POWER SW IC (IC6301) is in a state of shutdown caused by abnormally high temperature. Check the connection. If the connection is OK, then the port may be damaged. Replace it.	————
4	Defective MAIN CPU	MAIN Assy	If the symptom persists after the above corrections.	The MAIN CPU (IC10) is defective. Replace the MAIN Assy.	————

[4-2] No communication via the USB connector (Type B)

Check the following, with a USB device connected to the USB B connector.

No.	Cause	Diagnostics Point	Item to be Checked	Corrective Action	Reference
1	Loose connections in the communication line.	MAIN Assy	Check the connections from the MAIN CPU and USB CONTROLLER.	If connection is improper, resolder it. If connection is proper, go to 2.	————
2	Defective MAIN CPU	MAIN Assy	Check the signal from the MAIN CPU and USB CONTROLLER.	If the signal is not output from the MAIN CPU (IC10), it may be defective. Replace the MAIN Assy.	————
3	Loose connections in the USB signal.	MAIN Assy	Check the connections of the communication line (USB_D+, USB_D-).	The communication line may be loosely connected. Correct it if it is.	————
4	Defective USB CONTROLLER	MAIN Assy	If the symptom persists after the above corrections.	The USB CONTROLLER (IC701) is defective. Replace it.	————

Downloaded from www.Manualslib.com manuals search engine

[4-3] The SD card cannot be recognized.

Check the following, with an SD card inserted in the SD connector.

No.	Cause	Diagnostics Point	Item to be Checked	Corrective Action	Reference
1	Loose connections in the communication line.	SDCB Assy, MAIN Assy	Check the connection of the SD serial communication line.	If connection is improper, resolder it.	————
2	Defective MAIN CPU	MAIN Assy	If the symptom persists after the above corrections.	The MAIN CPU (IC10) is defective. Replace the MIAN Assy.	————

[5] LAN

[5-1] No LAN communication

Check the following, with a peripheral device connected to the Ethernet connector.

No.	Cause	Diagnostics Point	Item to be Checked	Corrective Action	Reference
1	Loose connections in the communication line.	MAIN Assy	Check the connection of the periphery circuit of ETHER (IC704).	If connection is improper, resolder it.	————
2	Defective ETHER PHY device LAN jack or MAIN CPU	MAIN Assy	If the symptom persists after the above corrections.	The ETHER PHY device (IC704) or LAN jack (JA702) may be defective. Replace it. If the symptom persists, the MAIN CPU (IC10) may be defective. Replace the MAIN Assy.	————

[6] ATAPI DRIVE

[6-1] No disc playback (Although loading and disc rotation can be performed properly, no track data are output.)

No.	Cause	Diagnostics Point	Item to be Checked	Corrective Action	Reference
1	Improper RESET signal	SRVB Assy, MAIN Assy	Check the ATA_RESET signal (CN7005).	Communication will not start while the ATA_RESET signal is L. Check the connection between the MAIN CPU (IC10) and SODC (IC7006). If the connection is not properly made, correct it. If no problem is found, see "[9] DRIVE ASSY." If the signal does not become H after those corrections, go to Step 2.	————
2	Loose connections in the communication line.	SRVB Assy, MAIN Assy	Check the connection of the ATAPI lines.	Check the connection between the MAIN CPU (IC10) and SODC (IC7006). If no problem is found, see "[9] DRIVE ASSY." If the symptom persists after those corrections, go to Step 3.	————
3	Defective MAIN CPU	MAIN Assy	Check the periphery circuit of the MAIN CPU.	Check the periphery of the MAIN CPU (IC10). If no problem is found, the MAIN CPU may be defective. Replace the MAIN Assy.	————

[7] AUDIO OUT

[7-1] No sound

The analog audio signal is not output.

No.	Cause	Diagnostics Point	Item to be Checked	Corrective Action	Reference
1	Power is not supplied properly.	MAIN Assy, JACB Assy	Check the power voltages (V+12A, V-12A, V+5_DAC) for audio.	Each power-supply may be loosely connected or may be defective. Correct loose connection. If the symptom persists, replace the defective part.	————
2	Defective MUTE signal	MAIN Assy	Check the signal from Pin 9 of CN501 (MUTE). Playback is muted when the si gnal is at +12 V.	The connection, transistor, or DSP may be defective. Correct loose connection. If the symptom persists, replace the defective part.	————
3	Loose connections in the signal line.	MAIN Assy, JACB Assy	Check the connection of the audio signal lines (ROUT, LOUT).	If connection is improper, resolder it. If connection is proper, go to 4.	————
4	Power is not supplied properly, or the DAC or DSP is defective.	MAIN Assy, JACB Assy	Check the voltages (V+5, V+5_DAC) of the DAC (IC505).	Each power-supply may be loosely connected or may be defective. Correct loose connection. If the symptom persists, replace the defective part.	————

The digital audio signal is not output.

No.	Cause	Diagnostics Point	Item to be Checked	Corrective Action	Reference
1	Loose connections in the signal line.	MAIN Assy, JACB Assy	Check the digital audio signal (SPDIF) and its connection.	If connection is improper, resolder it. If the SPDIF signal cannot be recognized, go to Step 3.	————
2	Defective transistor	MAIN Assy	Check the digital audio signal (SPDIF_OUT) and its connection.	If the SPDIF_OUT signal can be recognized, then the transistor (Q504) may be defective. Check the connection. If no problem is found, replace the transistor. If the SPDIF_OUT signal cannot be recognized, check the connection. If soldering is improper, resolder it.	————
3	Defective MAIN DSP	MAIN Assy	If the symptom persists after the above corrections.	Replace the MAIN Assy.	————

Downloaded from www.Manualslib.com manuals search engine

[8] CONTROL

[8-1] Improper fader operation after fader start

No.	Cause	Diagnostics Point	Item to be Checked	Corrective Action	Reference
1	Loose connections in the signal line.	JACB Assy	Check the waveforms of the control signals (CONT1, CONT2) from the CN9401 on the JACB Assy.	If the signal cannot be recognized, the JACB Assy may be defective. Check the soldering at the JACB Assy then resolder it, if necessary. If the signal can be recognized, go to Step 2.	————
2	Defective MAIN CPU	MAIN Assy	Check the waveforms of the control signals (CONT01, CONT02) from the MAIN Assy.	If the input signal can be recognized, then the MAIN CPU (IC10) may be defective. Replace the MAIN Assy. If the input signal cannot be recognized, the communication line or the peripheral devices may be loosely connected. Resolder the terminals.	————

[9] DRIVE ASSY

When it is thought abnormally, the drive section execute drive self-diagnose beforehand.

[9-1] Improper operation of the loading mechanism

No loading

No.	Cause	Diagnostics Point	Item to be Checked	Corrective Action	Reference
1	Missing or defective part	Loading mecha	Check that there is no part missing or defective.	If there is, install the missing part or replace the defective part.	————
2	Loose connections in the signal line.	Loading mecha	Check that the LP switch has been mounted.	If soldering is improper, resolder it.	————
3	Improper assembling	Loading mecha	Check that the lever is engaged with the LP switch.	Engage the lever with the LP switch.	————
4	Improper soldering	Loading mecha	Check that the wires from the loading motor have been properly soldered.	If they are not soldered, solder them.	————
5	Power supply error	SRVB Assy	Check the power voltages (12 V, 5 V, 3.3 V, and 1.5 V).	Check the connection of the parts at the periphery of the power-supply IC that does not output the voltage. If the symptom persists after a corrective action, the power supply block is defective. Replace it.	————
6	LPS1 and LPS2 signal errors	SRVB Assy	Check the waveforms of the LPS1 and LPS2 signal lines. (The LPS1 and LPS2 signals becomes L when the SW is set to ON.)	The loading detection SWs (S8901 and S8902) may be improperly soldered or defective. Resolder them, if necessary. If the symptom persists, replace them.	5.4 OPERATIONAL WAVEFORMS 2
7	MUTE1 and MUTE2 signal errors	SRVB Assy	Check the waveforms of the MUTE1 and MUTE2 signals. (During loading, the MUTE1 signal is L and the MUTE2 signal is H.)	DRIVER IC (IC7001) and SODC (IC7006) may be improperly soldered or defective. Resolder them, if necessary. If the symptom persists, replace SODC (IC7006).	————
8	LOAD signal error	SRVB Assy	Check the LOAD signal.	DRIVER IC (IC7001) and SODC (IC7006) may be improperly soldered or defective. Resolder them, if necessary. If the symptom persists, replace SODC (IC7006).	5.4 OPERATIONAL WAVEFORMS 2
9	Defective SRVB Assy	————	If the symptom persists after the above corrections.	Replace the SRVB Assy.	————

[9-2] The stepper does not work.

No.	Cause	Diagnostics Point	Item to be Checked	Corrective Action	Reference
1	The main unit is positioned inclined.	Main unit	Check if the main unit is positioned inclined.	Place it on a level surface.	————
2	Improper assembling	Traverse mecha	Check if there is a missing or defective part at the section where the main axis and stepper contact.	If there is, install the missing part or replace the defective part.	————
3	Improper assembling	Traverse mecha	Check the inside switch.	Assemble the INSW Assy properly.	————
4	Power supply error	SRVB Assy	Check the power voltages (12 V, 5 V, 3.3 V, 1.5 V, VREF1, VREF2 and VHALF).	Check the connection of the parts at the periphery of the power-supply IC that does not output the voltage. If the symptom persists after a corrective action, the power supply block is defective. Replace it.	————
5	INSW signal error	SRVB Assy	Check the INSW signal. (The INSW becomes L when the INSW is set to ON.)	The FFC cables that connect the traverse mechanism, SPCN, and SRVB are loosely connected, or the INSW is defective. Reconnect them securely. If the symptom persists, replace the INSW.	————
6	MU1 signal error	SRVB Assy	Check that the MU1 signal becomes H after loading is completed.	DRIVER IC (IC7001) and SODC (IC7006) may be improperly soldered or defective. Resolder them, if necessary. If the symptom persists, replace SODC (IC7006).	————
7	Improper assembling	Cables	Check that the FPC cable that connects the traverse mecha and the SRVB Assy is securely connected.	If it does not, securely connect it. If it is broken, replace the traverse mecha.	————

Downloaded from www.Manualslib.com manuals search engine

No.	Cause	Diagnostics Point	Item to be Checked	Corrective Action	Reference
8	Signal error	SRVB Assy	Check that a sine-wave signal is input to Pins 29 and 30 of IC7001.	The IC7001 may be loosely connected or defective. Resolder them, if necessary. If the symptom persists, replace SODC (IC7006).	5.4 OPERATIONAL WAVEFORMS [5] [7] [8]
9	Defective traverse mecha	————	If the symptom persists after the above corrections.	Replace the parts in the order of (1) DRIVER IC (IC7001), (2) SRVA Assy, then (3) traverse mecha.	————

[9-3] No playback

Neither a CD nor a DVD can be played back.

No.	Cause	Diagnostics Point	Item to be Checked	Corrective Action	Reference
1	Short-circuit pad	Traverse mecha	Check if the LD short-circuit pad is short-circuited.	If it is, open it.	————
2	LD current	SRVB Assy	Check that the LD current is within the specified range.	If there is any error, replace the traverse mecha.	5.2 Failure Judgment of the Pickup Assy
3	Power supply error	SRVB Assy	Check the power voltages (12 V, 5 V, 3.3 V, 1.5 V, VREF1, VREF2 and VHALF).	Check the connection of the parts at the periphery of the power-supply IC that does not output the voltage. If the symptom persists after a corrective action, the power supply block is defective. Replace it.	————
4	INSW signal error	SRVB Assy	Check the INSW signal. (L at ON.)	If the signal waveform is not proper, replace the INSW Assy.	————
5	MU1 signal error	SRVB Assy	Check that the MU1 signal becomes H after loading is completed.	DRIVER IC (IC7001) and SODC (IC7006) may be improperly soldered or defective. Resolder them, if necessary. If the symptom persists, replace SODC (IC7006).	————
6	Improper assembling	Traverse mecha	Check if the objective lens is dirty.	Clean the lens.	————
7	A–F signal error	SRVB Assy	Check the A–F signals (CN7001).	Check that the signals fluctuate with 2.2 V at the center. If a DC signal is not output, check the VREF1. If a DC signal is not output from it, replace the FEP (IC7002). If an AC signal is not output, check the soldering at the CN7001–IC7002 of the pickup. If soldering is improper, resolder it. If soldering is OK, replace the parts in the order of (1) FEP (IC7002), (2) DRIVER IC (IC7001), (3) SODC (IC7006), (4) SRVB Assy, then (5) traverse mecha.	————
8	RF signal error	SRVB Assy	Check the RF signal (CN7001).	Compare the waveform with the operational waveform to check if its quality is low. Check if the disc is dirty or scratched. Check the polarity of the 7/x6 signal. When it is normal, Check the connections between pickup and CN7001 and IC7002. If soldering is improper, resolder it. If soldering is OK, replace the parts in the order of (1) FEP (IC7002), (2) DRIVER IC (IC7001), (3) SODC (IC7006), (4) SRVB Assy, then (5) traverse mecha.	5.4 OPERATIONAL WAVEFORMS [1]
9	————	————	If the symptom persists after the above corrections.	Replace the parts in the order of (1) DRIVER IC (IC7001), (2) FEP (IC7002), (3) SODC (IC7006), (4) SRVB Assy, then (5) traverse mecha.	————

Only a CD cannot be played back

No.	Cause	Diagnostics Point	Item to be Checked	Corrective Action	Reference
1	LD current	SRVB Assy	Check that the LD current is within the specified range.	If there is any error, replace the traverse mecha.	5.2 Failure Judgment of the Pickup Assy
2	7/x6 signal error	————	Check that the 7/x6 signal is H during CD playback.	Check the connections between IC7006 and CN7001. If soldering is improper, resolder it.	————
3	E,F signal error	SRVB Assy	Check the E, F signals (CN7001).	Check that the signals fluctuate with 2.2 V at the center. If a DC signal is not output, check the VREF1. If a DC signal is not output from it, replace the FEP (IC7002). If an AC signal is not output, check the soldering at the CN7001–IC7002 of the pickup. If soldering is improper, resolder it. If soldering is OK, replace the parts in the order of (1) FEP (IC7002), (2) DRIVER IC (IC7001), (3) SODC (IC7006), (4) SRVB Assy, then (5) traverse mecha.	————
4	RF signal error	SRVB Assy	Check the RF signal (CN7001).	Compare the waveform with the operational waveform to check if its quality is low. Check if the disc is dirty or scratched. Check the polarity of the 7/x6 signal. When it is normal, Check the connections between pickup and CN7001 and IC7002. If soldering is improper, resolder it. If soldering is OK, replace the parts in the order of (1) FEP (IC7002), (2) DRIVER IC (IC7001), (3) SODC (IC7006), (4) SRVB Assy, then (5) traverse mecha.	5.4 OPERATIONAL WAVEFORMS [1]

Downloaded from www.Manualslib.com manuals search engine

Only a DVD cannot be played back

No.	Cause	Diagnostics Point	Item to be Checked	Corrective Action	Reference
1	LD current	SRVB Assy	Check that the LD current is within the specified range.	If there is any error, replace the traverse mecha.	5.2 Failure Judgment of the Pickup Assy
2	7/x6 signal error	————	Check that the 7/x6 signal is L during DVD playback.	Check the connections between IC7006 and CN7001. If soldering is improper, resolder it.	————
3	RF signal error	SRVB Assy	Check the RF signal (CN7001).	Compare the waveform with the operational waveform to check if its quality is low. Check if the disc is dirty or scratched. Check the polarity of the 7/x6 signal. When it is normal, Check the connections between pickup and CN7001 and IC7002. If soldering is improper, resolder it. If soldering is OK, replace the parts in the order of (1) FEP (IC7002), (2) DRIVER IC (IC7001), (3) SODC (IC7006), (4) SRVB Assy, then (5) traverse mecha.	5.4 OPERATIONAL WAVEFORMS 1

[10] EUP Mode

Shifting to EUP mode is not possible.

No.	Cause	Diagnostics Point	Item to be Checked	Corrective Action	Reference
1	Defective PANEL CPU	PNLB Assy	Check that the signal from Pin 29 of the PANEL CPU (IC8003) changes from H to L during mode shift.	The PANEL CPU (IC8003) may be defective. Check the soldering of the PANEL CPU and its periphery. If the soldering is OK, then replace it.	————
2	Disconnection, breakage, or loose connection of cables	SRVB Assy	Check that the signal from Pin 3 of the CN7302 changes from L to H during mode shift.	The signal line cable may be defective. If it is loosely connected, securely connect it. If it is broken, replace it.	————
3	Defective SW power	————	————	The SW power is defective. Replace it.	————

EUP mode cannot be exited.

No.	Cause	Diagnostics Point	Item to be Checked	Corrective Action	Reference
1	Defective key or loose connection of the signal line	PNLB Assy its periphery	Check the connection of the nonresponding key.	Check the connection of the signal line for the nonresponding key. If the connection is proper, replace the connected SW.	————
2	Defective PANEL CPU	PNLB Assy	Check that the signal from Pin 29 of the PANEL CPU (IC8003) changes from L to H during mode shift.	The PANEL CPU (IC8003) may be defective. Check the soldering of the PANEL CPU and its periphery. If the soldering is OK, then replace it.	————
3	Disconnection, breakage, or loose connection of cables	SRVB Assy	Check that the signal from Pin 3 of the CN7302 changes from H to L during mode shift.	The signal line cable may be defective. If it is loosely connected, securely connect it. If it is broken, replace it.	————
4	Defective SW power	————	————	The SW power is defective. Replace it.	————

Reference: Signal logic during EUP mode

	Normal mode	EUP mode
EUP_CONT	L	H or open
PANEL CPU (IC8003) Pin 29	H	L
CPU_EUP_CONT	X	L

X : Not Concerned

Downloaded from www.Manualslib.com manuals search engine

[11] SERVICE MODE

[11-1] The drive does not work during Test Operation mode.

The LD does not emit light.

No.	Cause	Diagnostics Point	Item to be Checked	Corrective Action	Reference
1	Short-circuit pad	Traverse mecha	Check if the LD short-circuit pad is short-circuited.	If it is, open it.	————
2	LD current	SRVB Assy	Check that the LD current is within the specified range.	If there is any error, replace the traverse mecha.	5.2 Failure Judgment of the Pickup Assy

The spindle motor does not rotate.

No.	Cause	Diagnostics Point	Item to be Checked	Corrective Action	Reference
1	Missing or defective part	Loading mecha	Check that there is no part missing or defective.	If there is, install the missing part or replace the defective part.	————
2	Power supply error	SRVB Assy	Check the power voltages (12 V, 5 V, 3.3 V, 1.5 V, VREF1, VREF2 and VHALF).	Check the connection of the parts at the periphery of the power-supply IC that does not output the voltage. If the symptom persists after a corrective action, the power supply block is defective. Replace it.	————
3	MU1 signal error	SRVB Assy	Check that the MU1 signal becomes H after loading is completed.	DRIVER IC (IC7001) and SODC (IC7006) may be improperly soldered or defective. Resolder them, if necessary. If the symptom persists, replace SODC (IC7006).	————
4	SPDLEC signal error	SRVB Assy	Check that the SPDLEC signal is a PWM signal with 1.65 V at the center.	DRIVER IC (IC7001) and SODC (IC7006) may be improperly soldered or defective. Resolder them, if necessary. If the symptom persists, replace SODC (IC7006).	5.4 OPERATIONAL WAVEFORMS 4 9
5	SPIN1 signal error	SRVB Assy	Check that the SPIN1 signal to Pin 29 of IC7002 is 3.3 V when disc rotation is at full speed.	If the signal is not input, check the soldering. If the soldering is improper, resolder it.	5.4 OPERATIONAL WAVEFORMS 4
6	————	————	If the symptom persists after the above corrections.	Replace the parts in the order of (1) DRIVER IC (IC7001), (2) SODC (IC7006), (3) SRVB Assy, then (4) traverse mecha.	————

In-focus not possible

No.	Cause	Diagnostics Point	Item to be Checked	Corrective Action	Reference
1	Short-circuit pad	Traverse mecha	Check if the LD short-circuit pad is short-circuited.	If it is, open it.	————
2	LD current	SRVB Assy	Check that the LD current is within the specified range.	If there is any error, replace the traverse mecha.	5.2 Failure Judgment of the Pickup Assy
3	Power supply error	SRVB Assy	Check the power voltages (12 V, 5 V, 3.3 V, 1.5 V, VREF1, VREF2 and VHALF).	Check the connection of the parts at the periphery of the power-supply IC that does not output the voltage. If the symptom persists after a corrective action, the power supply block is defective. Replace it.	————
4	MU1 signal error	SRVB Assy	Check that the MU1 signal becomes H after loading is completed.	DRIVER IC (IC7001) and SODC (IC7006) may be improperly soldered or defective. Resolder them, if necessary. If the symptom persists, replace SODC (IC7006).	————
5	SPDLEC signal error	SRVB Assy	Check the SPDLFG signal.	SPDLFG signal may be improperly solded and SODC (IC7006) may be defective. Resolder them, if necessary. If the symptom persists, replace SODC (IC7006). If the symptom persists, replace DRIVER IC (IC7001).	5.4 OPERATIONAL WAVEFORMS 4 9
6	FEDRV signal error	SRVB Assy	Check that the FEDRV signal fluctuates with 1.65 V at the center.	FEDRV signal may be improperly solded and SODC (IC7006) may be defective. Resolder them, if necessary. If the symptom persists, replace SODC (IC7006). If the symptom persists, replace FEP (IC7002).	5.4 OPERATIONAL WAVEFORMS 3 4 9
7	FE signal error	SRVB Assy	Check that an S-shaped signal is output when a waveform of the FE (FEDRV) signal is rising after it drops down from 1.65 V.	FE signal may be improperly solded and SODC (IC7006) may be defective. Resolder them, if necessary. If the symptom persists, replace SODC (IC7006). If the symptom persists, replace FEP (IC7002).	5.4 OPERATIONAL WAVEFORMS 3 4 5 9
8	————	————	If the symptom persists after the above corrections.	Replace the parts in the order of (1) FEP (IC7002), (2) SODC (IC7006), (3) DRIVER IC (IC7001), (4) SRVB Assy, then (5) traverse mecha.	————

Downloaded from www.Manualslib.com manuals search engine

No tracking close

No.	Cause	Diagnostics Point	Item to be Checked	Corrective Action	Reference
1	————	Traverse mecha	Check that focusing is in. (If focusing is out, tracking close is not possible.)	See “In-focus not possible” above.	————
2	Signal error	SRVB Assy	With a CD, check that the E and F signals fluctuate with 2.2 V at the center. With a DVD, check the A, B, C, and D signals.	Check that the signals fluctuate with 2.2 V at the center. If a DC signal is not output, check the VREF1. If a DC signal is not output from it, replace the FEP (IC7002). If an AC signal is not output, check the soldering at the CN7001–IC7002 of the pickup. If soldering is improper, resolder it. If soldering is OK, replace the traverse mecha.	5.4 OPERATIONAL WAVEFORMS
3	TE signal error	SRVB Assy	Check that the TE signal fluctuates with 1.65 V at the center.	Check the connection of the parts at the periphery of the FEP (IC7002). If soldering is improper, resolder it. If soldering is OK, replace the FEP (IC7002).	5.4 OPERATIONAL WAVEFORMS 4 5 6 7 8
4	TEDRV signal error	SRVB Assy	Check that the TEDRV signal fluctuates with 1.65 V at the center, and that a pulselike signal is output during tracking close.	If the output signal waveform is not proper, the connection of the SODC (IC7006) and its periphery may be loose or the parts may be defective. If the connection is loose, reconnect securely. If the connection is OK, replace the SODC (IC7006).	5.4 OPERATIONAL WAVEFORMS 6 7 8
5	————	————	If the symptom persists after the above corrections.	Replace the parts in the order of (1) FEP (IC7002), (2) SODC (IC7006), (3) DRIVER IC (IC7001), (4) SRVB Assy, then (5) traverse mecha.	————

[12] Error Codes

How to respond when an error code is displayed on the CONTROLLER DISPLAY (LCD) is described below.

[12-1] E-7001: DISC DRIVE ERROR

The ATAPI drive does not work properly.

No.	Cause	Diagnostics Point	Item to be Checked	Corrective Action	Reference
1	————	Traverse mecha	Check the MAIN DSP (IC301,) using automatic device diagnostics and the status LEDs.	If it is judged as NG, the ATAPI drive does not work properly. If the track data are not output although loading and rotating are properly performed, see [6] ATAPI DRIVE. In other cases, see [9] DRIVE ASSY.	6.1 SERVICE MODE_ [3] Indication of various information

[12-2] E-7010: DSP DEVICE ERROR

The MAIN DSP (IC301) does not work properly. Downloading of programs is not possible.

No.	Cause	Diagnostics Point	Item to be Checked	Corrective Action	Reference
1	————	————	————	If it is judged as NG, the MAIN DSP (IC302) does not work properly or communication between the MAIN CPU (IC10) and MAIN DSP is not established. Proceed as follows:	————
2	Power is not supplied properly.	MAIN Assy	Check the power voltages (V+3R3_DSP and V+1R2_DSP).	The MAIN DSP requires two power supply systems. Check the connections of the power supply lines. If soldering is improper, resolder it.	————
3	The clock is not properly input.	MAIN Assy	Check that the frequency at Pin 38 (DSP_CLK) of SD_RAM (IC302) is approx. 129 MHz.	Check the connection of the logic ICs (IC16, 506). If soldering is improper, resolder it.	————
4	The RESET signal is not properly input.	MAIN Assy	Check that the signals of the DSP_RST and CPU_DSP_RST lines are H.	Check the connection of the logic IC (IC8). If soldering is improper, resolder it. If the signal of the CPU_DSP_RST line is L, the port on the MAIN CPU may be damaged. If the signal of the DSP_RST line is L, check the connection of the logic IC (IC8) and its periphery.	————
5	Loose connection between the MAIN CPU and MAIN DSP	MAIN Assy	Check the connection between the MAIN CPU and MAIN DSP.	Check the connections between MAIN CPU (IC10) and MAIN DSP (IC301). If soldering is improper, resolder it.	————
6	Loose connection between the MAIN DSP and SD_RAM	MAIN Assy	Check the connection between the MAIN DSP and SD_RAM.	Check the connections between MAIN DSP (IC301) and SD_RAM (IC302). If soldering is improper, resolder it.	————
7	————	————	If the symptom persists after the above corrections.	Replace the MAIN Assy.	————

Downloaded from www.Manualslib.com manuals search engine

[12-3] E-7020: USB-B DEVICE ERROR

The USB-B controller (IC701) does not work properly.

No.	Cause	Diagnostics Point	Item to be Checked	Corrective Action	Reference
1	————	————	————	If it is judged as NG, the USB-B controller (IC701) does not work properly or communication between the MAIN CPU (IC10) and USB-B controller is not established. Proceed as follows: See also "[4-2] No communication via the USB connector (Type B)."	————
2	Power is not supplied properly.	MAIN Assy	Check the power voltage of V+3R3_USB_IO) line.	Check the connections of the power supply lines. If soldering is improper, resolder it.	————
3	The clock is not properly input.	MAIN Assy	Check that the frequency at Pin 14 (USB_CLK) of USB-B controller (IC701) is 48 MHz.	Check the connection of the logic IC (IC4). If soldering is improper, resolder it.	————
4	The RESET signal is not properly input.	MAIN Assy	Check that the signals of the USB_RST and CPU_USB_RST lines are H.	Check the connection of the logic IC (IC8). If soldering is improper, resolder it. If the signal of the CPU_USB_RST line is L, the port on the MAIN CPU may be damaged. If the signal of the USB_RST line is L, check the connection of the logic IC (IC8) and its periphery.	————
5	Loose connection between the MAIN CPU and USB-B controller	MAIN Assy	Check the connection between the MAIN CPU and USB-B controller.	Check the connections between MAIN CPU (IC10) and USB-B controller (IC701). If soldering is improper, resolder it.	————
6	————	————	If the symptom persists after the above corrections.	Replace the USB-B controller (IC701).	————

[12-4] E-7021: PHY CHIP ERROR

The PHY CHIP (IC704) does not work properly.

No.	Cause	Diagnostics Point	Item to be Checked	Corrective Action	Reference
1	————	————	————	If it is judged as NG, the PHY CHIP (IC704) does not work properly or communication between the MAIN CPU (IC10) and PHY CHIP is not established. Proceed as follows: See also "[5-1] No LAN communication."	————
2	Power is not supplied properly.	MAIN Assy	Check the power voltages of V+3R3_ETH and V+3R3A_ETHR) lines.	Check the connections of the power supply lines. If soldering is improper, resolder it.	————
3	The clock is not properly input.	MAIN Assy	Check that the frequency at Pin 47 (X2) of PHY CHIP (IC704) is 25 MHz.	Check the connections between X1302 and PHY CHIP. If soldering is improper, resolder it.	————
4	The RESET signal is not properly input.	MAIN Assy	Check that the signals of the ETHER_RST and CPU_ETHER_RST lines are H.	Check the connection of the logic IC (IC8). If soldering is improper, resolder it. If the signal of the CPU_ETHER_RST line is L, the port on the MAIN CPU may be damaged. If the signal of the ETHER_RST line is L, check the connection of the logic IC (IC8) and its periphery.	————
5	Loose connection between the MAIN CPU and PHY CHIP controller	MAIN Assy	Check the connection between the MAIN CPU and PHY CHIP controller.	Check the connections between MAIN CPU (IC10) and PHY CHIP (IC704). If soldering is improper, resolder it.	————
6	————	————	If the symptom persists after the above corrections.	Replace the PHY CHIP (IC704).	————

[12-5] E-7023: GUI CPU ERROR

The TFT CPU (IC4001)does not work properly.

No.	Cause	Diagnostics Point	Item to be Checked	Corrective Action	Reference
1	————	————	————	If it is judged as NG, the TFT CPU (IC4001), FLASH (IC4004) or SD_RAM (IC4005) does not work properly or communication between the MAIN CPU (IC10) and TFT CPU (IC4001) is not established. Proceed as follows: See also "[4-2] No communication via the USB connector (Type B)."	————
2	Power is not supplied properly.	TFTB Assy	Check the power voltages of V+3R3T_BF and V+1R2BF) lines.	The TFT CPU requires two power supply systems. Check the connections of the power supply lines. If soldering is improper, resolder it.	————

Downloaded from www.Manualslib.com manuals search engine

No.	Cause	Diagnostics Point	Item to be Checked	Corrective Action	Reference
3	The clock is not properly input.	TFTB Assy	Check that the frequency at Pin 38 (BUSCLK) of SD_RAM (IC4005) is approx. 98 MHz.	Check the connection of the Oscillator (X4002) and its periphery. If soldering is improper, resolder it.	————
4	The RESET signal is not properly input.	TFTB Assy, MAIN Assy	Check that the signals of the TFT_RST line is H.	Check the connection of the logic IC (IC7). If soldering is improper, resolder it. If the signal of the TFT_RST line is L, check the connection of the logic IC (IC7) and its periphery.	————
5	Loose connection between the TFT CPU and FLASH	TFTB Assy	Check the connection between the TFT CPU and FLASH.	Check the connections between TFT CPU (IC4001) and FLASH (IC4004). If soldering is improper, resolder it.	————
6	Loose connection between the TFT CPU and SD_RAM	TFTB Assy	Check the connection between the TFT CPU and SD_RAM.	Check the connections between TFT CPU (IC4001) and SD_RAM (IC4005). If soldering is improper, resolder it.	————
7	————	————	If the symptom persists after the above corrections.	Replace the TFT CPU (IC4001).	————

[12-6] E-7025: CDC DEVICE ERROR

The CDC device (IC5001) for the needle search pad does not work properly.

No.	Cause	Diagnostics Point	Item to be Checked	Corrective Action	Reference
1	————	————	————	If it is judged as NG, the CDC (IC5001) does not work properly or communication between the PANEL CPU (IC8003) and CDC (IC5001) is not established. Proceed as follows:	————
2	Loose connections in the communi-cation line.	PNLB Assy, CDCB Assy	Check the connections of communication line between the PANEL CPU (IC8003) and CDC (IC5001).	If soldering is improper, resolder it.	————
3	Defective CDCB Assy	CDCB Assy	If the symptom persists after the above corrections.	Replace the IC5001. If the symptom persists, replace the CDCB Assy.	————

[12-7] E-8709: COMMUNICATION ERROR

Communication between the TFT CPU (IC4001) and MAIN CPU (IC10) is not possible.

No.	Cause	Diagnostics Point	Item to be Checked	Corrective Action	Reference
1	————	————	————	If it is judged as NG, the MAIN CPU (IC10) or SD_RAM (IC1, 2, 12 and 13) does not work properly or communication between the MAIN CPU (IC10) and TFT CPU (IC4001) is not established. Proceed as follows:	————
2	Power is not supplied properly.	MAIN Assy	Check the power voltages of V+3R3_CPU and V+1R2_CPU) lines.	The MAIN CPU requires two power supply systems. Check the connections of the power supply lines. If soldering is improper, resolder it.	————
3	Loose connection between the MAIN CPU and SD_RAM	MAIN Assy	Check the connection between the MAIN CPU and SD_RAM.	Check the connections between MAIN CPU (IC10) and SD_RAM (IC108 and IC109). If soldering is improper, resolder it.	————
4	Loose connections in the communi-cation line.	MAIN Assy, TFTB Assy	Check the connections of communication line between the MAIN CPU (IC101) and TFT CPU (IC4001).	If soldering is improper, resolder it.	————
5	The clock is not properly input.	MAIN Assy	Check that the frequency at Pin 38 (CPU_CLKOUT) of SD_RAM (IC108 and IC109) are approx. 107.9 MHz.	Check the connection of the logic IC (IC10). If soldering is improper, resolder it.	————
6	Loose connection between the MAIN CPU and SD_RAM	MAIN Assy	Check the connection between the MAIN CPU and SD_RAM.	Check the connections between MAIN CPU (IC10) and SD_RAM (IC1, 2, 12 and 13). If soldering is improper, resolder it.	————
7	————	————	If the symptom persists after the above corrections.	Replace the MAIN Assy.	————

[12-8] E-7026: AUTH CHIP ERROR

The Apple authentication chip (IC14) for the needle search pad does not work properly.

No.	Cause	Diagnostics Point	Item to be Checked	Corrective Action	Reference
1	Loose connection between the MAIN CPU and AUTH CHIP	MAIN Assy	Check the connections of communication line between the MAIN CPU and AUTH CHIP.	Check the connections between MAIN CPU (IC10) and AUTH CHIP (IC14). If soldering is improper, resolder it.	————
2	————	————	If the symptom persists after the above corrections.	Replace the MAIN Assy.	————

Downloaded from www.Manualslib.com manuals search engine

5.4 OPERATIONAL WAVEFORMS

1

■ RF (CD: STD-905/DVD: Z-1)

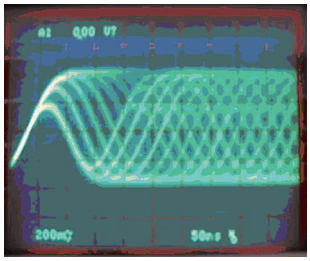

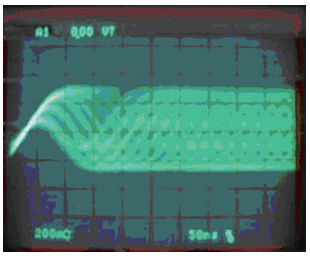

2

■ Loading in (1-ch LPS1, 2-ch LPS2, 3-ch LOAD)

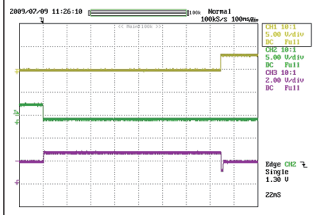

■ Loading out (1-ch LPS1, 2-ch LPS2, 3-ch LOAD)

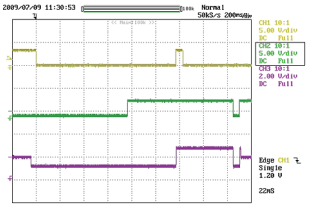

3

■ In-focus (CD/DVD) 1-ch FE, 2-ch FEDRV

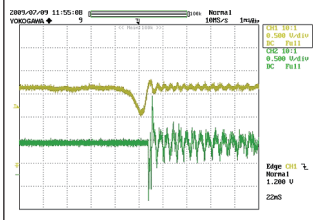

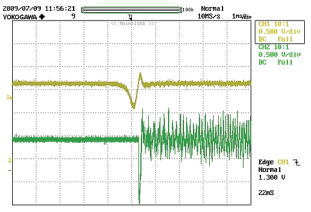

4

■ Setup (CD/DVD) 1-ch FE, 2-ch FEDRV, 3-ch TE, 4-ch SPIN

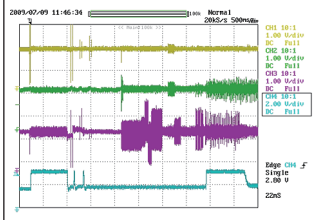

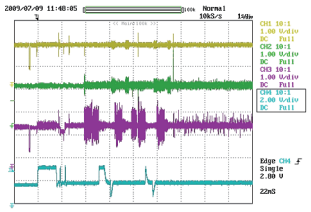

5

■ Playback (CD/DVD) 1-ch FE, 2-ch TE, 3-ch SLIN1, 4-ch SLIN2

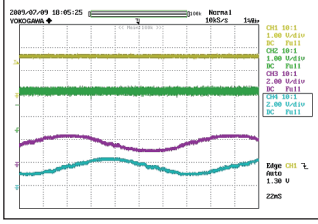

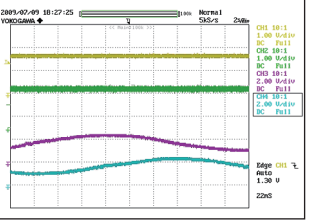

6

■ Pause (CD/DVD) 1-ch TE, 2-ch TEDRV, 3-ch RF, 4-ch OFTR

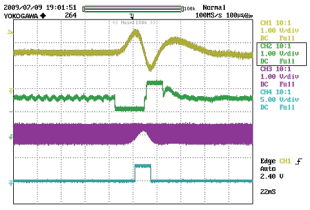

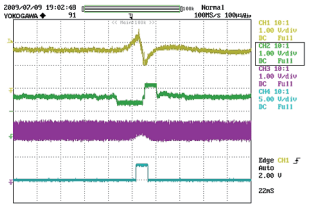

7

■ Track search (CD/DVD) 1-ch TE, 2-ch TEDRV, 3-ch SLIN1, 4-ch SLIN2

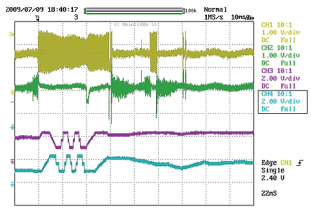

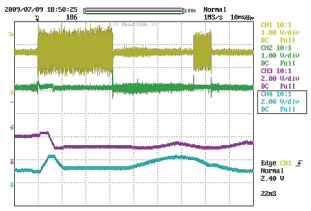

8

■ Search (CD-DA/DVD-MP3) 1-ch TE, 2-ch TEDRV, 3-ch SLIN1, 4-ch SLIN2

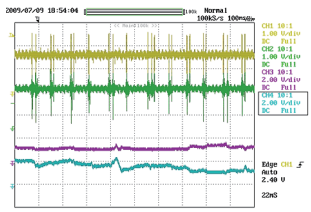

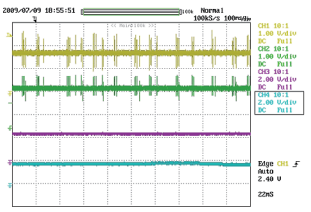

9

■ Stop (CD/DVD) 1-ch FE, 2-ch FEDRV, 3-ch SPIN, 4-ch SPDLFG

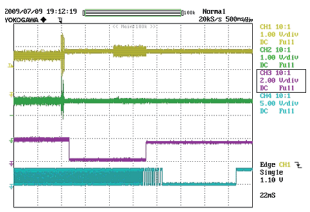

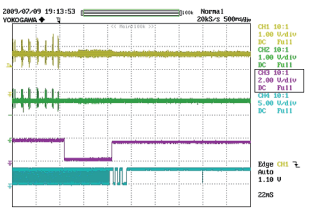

Downloaded from www.Manualslib.com manuals search engine

5.5 SETUP SEQUENCE

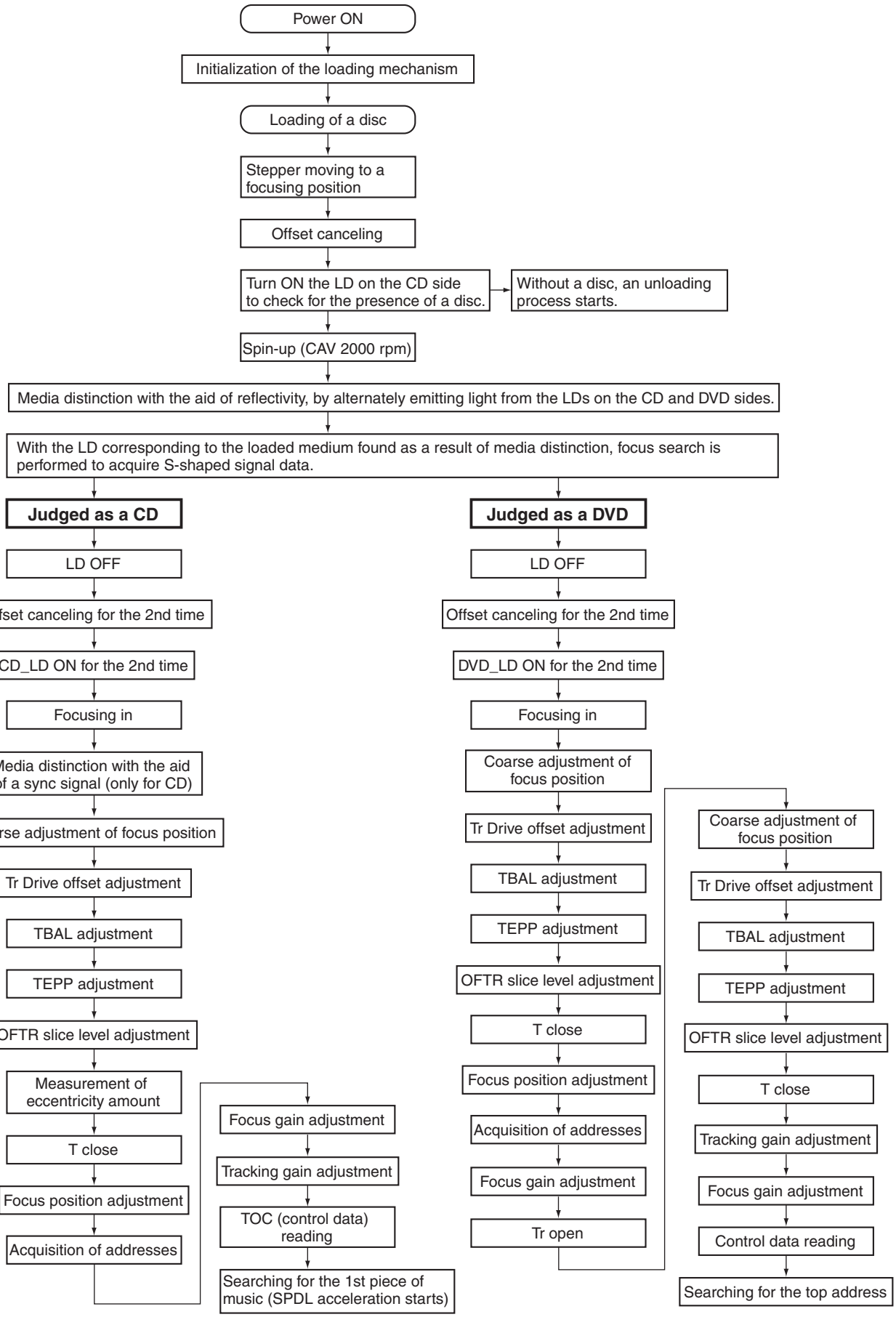

Downloaded from www.Manualslib.com manuals search engine

5.6 CONNECTION CONFIRMATION WITH THE PC

[1. USB B connector]

Whether communication between the PC connected via the USB B connector and this unit is properly performed or not can be confirmed on the PC.
Note: Installation of the driver software is not necessary.

■ Use Device Manager for checking.
If the PC and this unit are properly connected, the components of this unit are added in Device Manager (under Hardware) as devices.
If all components are properly displayed, the PC and this unit are properly communicating via the USB connector.

In a case of Windows XP:
Start, Control Panel, System, Hardware, then Device Manager
Devices to be added:
Universal Serial Bus controllers
USB Composite Device
Under “Sound, video and game controllers”
USB Audio Device
Human Interface Devices
HID-compliant device
USB Human Interface Device

A communication check may be easily performed if connection is made with Device Manager displayed on the PC screen.

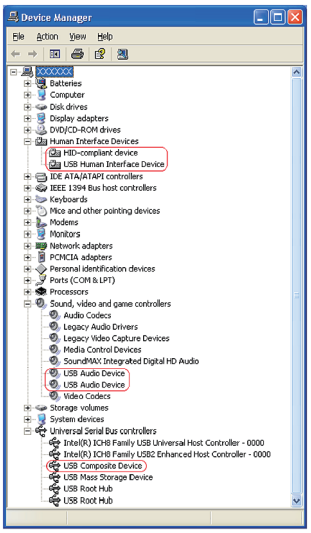

[2. LINK]

Whether communication between the PC connected via the LINK connector and this unit is properly performed or not can be confirmed on this unit.
Note: Use a Category 5 cable or a cable with higher specifications for connection.
Either a straight or cross LAN cable can be used when the unit is directly connected with the PC, but when the unit is connected with the PC via a hub, be sure to use a straight cable.

■ Use the MENU/UTILITY key of this unit to check linkage.
The linkage between the PC and this unit can be confirmed with LINK STATUS under [MENU/UTILITY].

How to display LINK STATUS
1. Hold the MENU/UTILITY key pressed for at least 1 sec.
   The [UTILITY] screen will be displayed.
2. Select LINK STATUS, using the rotary selector.
3. With LINK STATUS selected, connect the PC and this unit, using the LINK cable.
4. Check the LINK STATUS display.

	① Not connected	② While connection is being made	③ When connected properly
Indication	NOT CONNECT	CONNECTING	CONNECTED

If the indication changes from ① to ② then ③, the link is properly established.
If the cable is disconnected, the indication returns to ①.

5. After checking is completed, press the MENU/UTILITY key.
   The screen displayed before the MENU/UTILITY key was pressed will be restored

Downloaded from www.Manualslib.com manuals search engine

6. SERVICE MODE
6.1 SERVICE MODE

OUTLINE OF THE SERVICE MODE

The following service modes are prepared for this unit.

① Confirmation of the button input and an indication function.
It is the mode which checks each input and display function of a button, a JOG dial, the slider volume, a encoder and a needle pad.

② Check mode of the load of JOG dial.
It is the mode which measures the load when rotating JOG dial.

③ Indication of various information
It is a mode displaying information such as a version and an error history, a device normal / abnormality judgment.

④ Error display list
An error code and the contents are shown.

⑤ Drive Self-Diagnosis
It is the mode which performs self-diagnosis of a drive unit.

⑥ Contents of drive self-diagnosis
It is explanation of the contents of self-diagnosis of a drive unit.

⑦ Confirmation of movement of the drive unit
It is the mode which checks operation of a mechanism and servo of drive unit.

⑧ Output of the alarm port
Explanation of the meaning of output of status terminal on a PC Board Assy.

⑨ Firmware update.
Explanation of the method of firmware update.

DETAILS OF THE SERVICE MODE

[1] Confirmation of the button input and an indication function

When it spends a power supply while pushing a TEMPO button and a MEMORY button simultaneously, It is displayed in the LCD display part, "CDJ-2000NXS SERVICE MODE", and enters into this mode.
(Please continue pushing until "Pioneer LOGO" screen disappears.)
When it enters this mode, the TAG-TRACK button is pushed, and the screen is sent as follows, the following status displays are done.
In this mode, the input of each button, JOG, volume, etc. is normal, and it can check that a display can also be performed normally.
In addition, indication turns on while you push a button.
Caution: In this status display, if a TOUCH/BRAKE knob is turned to the limit of the right, it will shift to "the load measurement mode of JOG."(Refer to the following clause.)

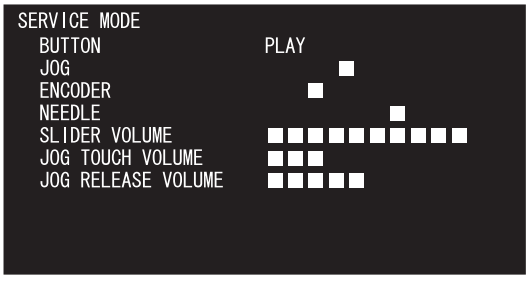

BUTTON : The pushed button name is displayed.
JOG : The point moves according to the direction that JOG turned.
ENCODER : The point moves according to the direction that ENCODER switch turned.
NEEDLE : The point moves according to the direction to which touched the needle pad and it was made to move.
SLIDER VOLUME : If a TEMPO slider knob is moved to the - side, a bar display will increase.
JOG TOUCH VOLUME : If a TOUCH/BRAKE knob is turned to the right, a bar display will increase.
JOG RELEASE VOLUME : If a RELEASE/START knob is turned to the right, the Bar display will increase.

Downloaded from www.Manualslib.com manuals search engine

Button, Switch	Light up LED	Status Display (BUTTON)	Other Displays
PLAY/PAUSE	PLAY/PAUSE	PLAY	
CUE	CUE	CUE	
IN/CUE/IN ADJUST	IN/CUE/IN ADJUST	IN	
OUT/OUT ADJUST	OUT/OUT ADJUST	OUT	
RELOOP/EXIT	RELOOP/EXIT	RELOOP/EXIT	
TRACK REV (I◄◄)		PREVIOUS I◄◄	
TRACK FWD (►►I)		NEXT ►►I	① (Refer to the display pattern of JOG FL)
SEARCH REV (◄◄)		REV ◄◄	② (Refer to the display pattern of JOG FL)
SEARCH FWD (►►)		FWD ►►	⑤ (Refer to the display pattern of JOG FL)
HOT CUE (A)	HOT CUE(A), (B), (C) RED	HOT CUE A	
HOT CUE (B)	HOT CUE(A), (B), (C) GREEN	HOT CUE (B)	
HOT CUE (C)	HOT CUE(A), (B), (C) UMBER	HOT CUE C	
REC MODE		REC MODE	
JOG MODE	VINYL	JOG MODE	④ (Refer to the display pattern of JOG FL)
TEMPO RANGE	CDJ	TEMPO RANGE	
MASTER TEMPO	MASTER TEMPO	MASTER TEMPO	
TEMPO RESET	TEMPO RESET	TEMPO RESET	
TIME MODE/AUTO CUE		TIME/ACUE	
DELETE	All LED lights up *1	DELETE	All JOG-FL lights up
MEMORY	All LED lights up *1 *2	MEMORY	All JOG-FL lights up
EJECT	EJECT	EJECT	
CUE/LOOP CALL ◄		◄ CALL	
CUE/LOOP CALL ►		CALL ►	
JOG TOUCH	JOG TOUCH	JOG TOUCH SW	③ (Refer to the display pattern of JOG FL)
LOOP MODE		LOOP MODE	
4-BEAT LOOP		4-BEAT LOOP	
TEMPO		SLIDER VOLUME ■ MARK Increase and decrease (10 points)	
JOG (FWD ROTATE)	JOG illuminations white	JOG ■ MARK Right movement (10 points by one rotation)	
JOG (REV ROTATE)	JOG illuminations red	JOG ■ MARK Left movement (10 points by one rotation)	
TOUCH/BREAK (VOLUME)		JOG TOUCH VOLUME ■ MARK Increase and decrease (10 points)	
RELEASE/START (VOLUME)		JOG RELEASE VOLUME ■ MARK Increase and decrease (10 points)	
DIRECTION LEVER (REV)	REV	REV	
SD DOOR (OPEN)	SD Access	SD OPEN	
USB STOP	USB Access	USB STOP	
LINK	LINK	LINK	
USB	USB	USB	
SD	SD	SD	
DISC	DISC	DISC	
BROWSE	BROWSE	BROWSE	
TAG LIST	TAG LIST	TAG LIST	
INFO	INFO	INFORMATION	
MENU	MENU	MENU	
BACK			Color pattern-changes. (Refer to the color pattern display of LCD)
TAG TRACK			Color pattern-changes. (Refer to the color pattern display of LCD)
ROTARY SELECTOR (SW)	ROTARY SELECTOR INDICATOR	ENCODER PUSH	
ROTARY SELECTOR (FWD ROTATE)		ENCODER ■ MARK Right movement (Max 10 points)	
ROTARY SELECTOR (REV ROTATE)		ENCODER ■ MARK Left movement (Max 10 points)	
NEEDLE SEARCH (Touch and right/left movement)	NEEDLE SEARCH	NEEDLE ■ MARK Right-and-left movement (10 points)	
BEAT SYNC	BEAT SYNC	SYNC	
BEAT SYNC MASTER	BEAT SYNC MASTER	MASTER	
REKORDBOX	REKORDBOX	REKORDBOX	
QUANTIZE	QUANTIZE	QUANTIZE	
SLIP	SLIP	SLIP	

*1 About the LED of the HOT CUE button, red turns on HOT CUE(A), green turns on HOT CUE(B), and LED of the umber turns on HOT CUE(C). STANDBY-LED and DISC SLOT-LED are turned on only here.
*2 A part of LED is turned on darkly.

Downloaded from www.Manualslib.com manuals search engine

Display pattern of JOG FL

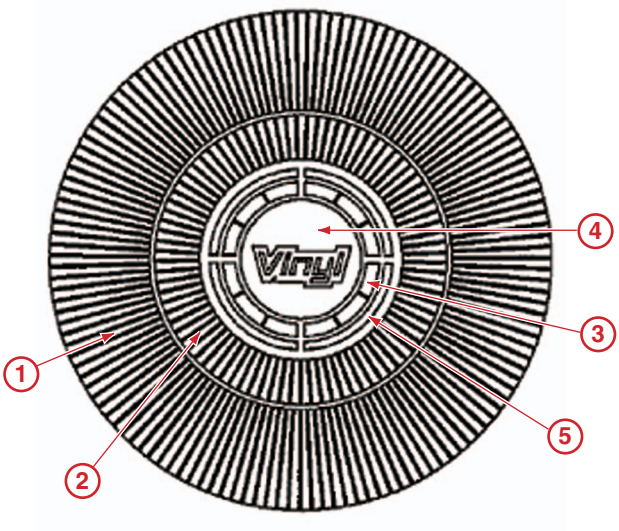

Color pattern display of LCD

When pressing the TAG-TRACK button from above status indication more and send a screen, display the six kinds of color patterns to LCD as follows.
If the BACK button is pushed, a display will return a previous page.

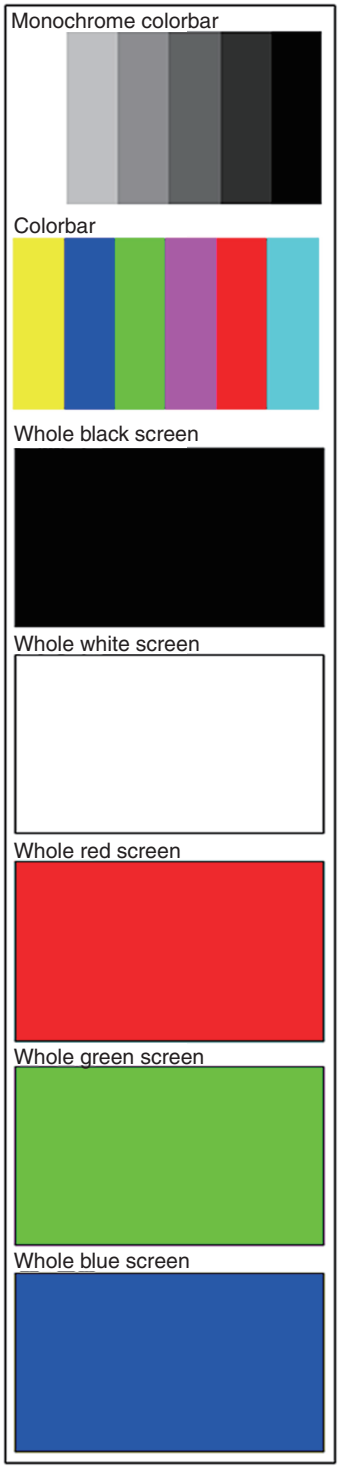

Downloaded from www.Manualslib.com manuals search engine

[2] Check mode of the load of JOG dial

Measurement

It is the mode which judges the load (light/heavy) when rotating JOG dial numerically objective.
It goes into "[1] Confirmation of the button input and a indication function", and it will become this mode if a TOUCH/BRAKE switch is turned to the limit of the right.

It goes into this mode, and a number will be displayed if JOG dial is turned with sufficient vigor.
The rotation direction -- right-handed rotation and left-handed rotation -- either is O.K.
The meaning of the numerical value displayed is as follows.

TOP SPEED: Top speed (let the time of turning one rotation in 1.8 second be 1 speed)
TIME: Time taken for rotation to fall to 1.5 speed from 3 speed

It is necessary to make it rotate top speed to 7.0 or more times to measure the rotation fall time required.
Not more than 7.0 times faster in the display " 00M:00S 00.0F " to be flashing a warning.

In addition, when it carries out continuously several times, about time, 2nd henceforth takes and displays an average of a maximum of 99 times.
Measurement which absorbed variation by this can be performed.

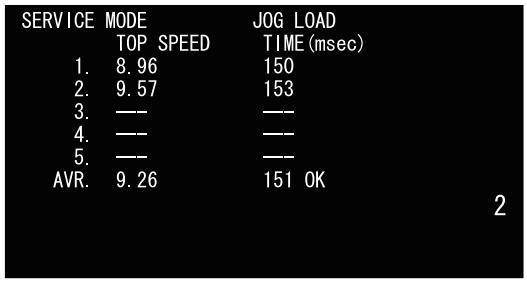

Input data twice.

←The numerical value written to the right end shows the number of times of an input.

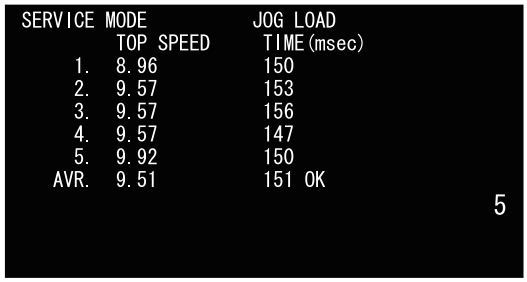

Input data 5 times.

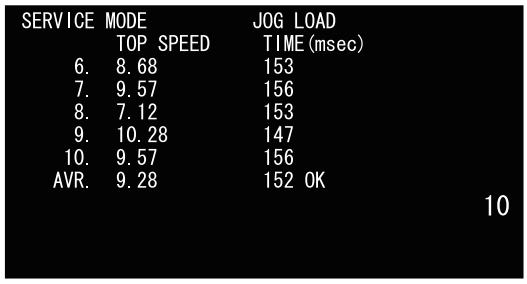

Input data 10 times.

Measurement to 99 times and calculation of average value can be performed by the highest.

Judgment result

If time is in a certain uniformity range, I display it with "OK" in the line of title, but display "NG" if I do not enter.
This judgment value is 170 ± 20 msec.

Record of a judgement

If USB memory is inserted and MASTER TEMPO button is pushed, a measurement result can write out as a CSV file of the name "JOGLOAD_2KNXS.CSV."
In addition, data is added whenever it pushes MASTER TEMPO button.
Moreover, the MAC address is filled in as solid identification.

● MAC_ADDR:00-E0-36-00-84-40

NO.	TOP SPEED	TIME(msec)
1	7.71	138
2	8.17	138
3	7.61	138
4	9.25	141
5	8.81	135
6	8.41	138
7	8.68	141
8	7.12	141
9	8.17	138
10	8.68	135
11	8.17	138
12	8.54	132
13	7.82	135
AVR	8.24	137(NG)

(judge : 150ms <= Time <= 190ms)

Downloaded from www.Manualslib.com manuals search engine

[3] Indication of various information

If a power supply is switched on, pushing "TEMPO" "CUE/LOOP CALL ◄" button simultaneously with a button, it will be displayed on LCD display part as "CDJ-2000NXS SERVICE MODE", and will go into this mode.
(Please continue pushing until "Pioneer LOGO"screen disappears.)
It goes into this mode, and if a TAG-TRACK button is pushed and a screen is sent, the contents of a display will change as follows. Moreover, it can return with BACK button.

① Version information

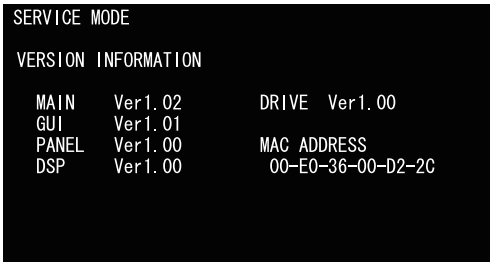

The version number of CPU/microcomputer carried in this machine is displayed.
The MAC Address of Ethernet simultaneously built in this machine is also displayed.

MAIN : The CPU which controls a main
GUI : The CPU which controls a LCD display
PANEL : The microcomputer which controls a button input.
DSP : Audio DSP
DRIVE : The controller which controls a disc drive.

② Error history

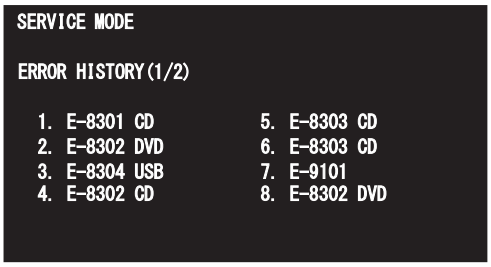

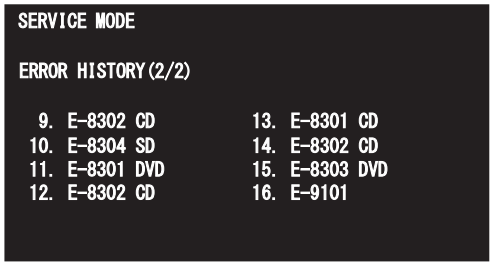

16 pieces are divided into two screens and the error history generated in the past is displayed. “1” becomes the newest error code.
The 16 newest pieces are displayed.
The screen is selected with the BACK button or TAG TRACK button.
Moreover, the item which follows an error code expresses a media. (The error which is not related to media is blank.)

USB : USB device (MEMORY/HDD)
SD : SD card
CD : DRIVE - CD media (CDDA/CD-ROM)
DVD : DRIVE - DVD media (DVD-ROM)
About contents of an error code, please refer to "[4] Error display list".

③ Auto device diagnosis

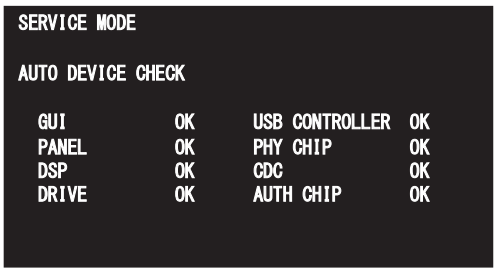

The result which judged normal/abnormalities of each device is displayed at the time of power supply ON and initialization.

GUI : The CPU which controls LCD indication.
PANEL : The microcomputer which controls a button input.
DSP : Audio DSP
DRIVE : The controller which controls a disc drive.
USB CONTROLLER : USB DEVICE (Type B) controller
PHY CHIP : The controller which controls the physical layer of Ethernet.
CDC : The tip which outputs the signal of a needle pad.
AUTH CHIP : The authentication tip of Apple.

Please refer to "[8] Output of the alarm port" for details.

Downloaded from www.Manualslib.com manuals search engine

④ Factory reset





It is used to return the contents set up by UTILITY to a factory-shipments state, or clear an error history.
If TIME MODE button is pushed on this screen, it will return to the following states.

<<UTILITY>>
- PLAY MODE = CONTINUE
- EJECT/LOAD LOCK = UNLOCK
- AUTO CUE LEVEL = -60 dB
- SLIP FLASHING = ON
- ON AIR DISPLAY = ON
- JOG BRIGHTNESS = 2
- JOG INDICATOR = ON
- DISC SLOT ILLUMINATION = 2
- LANGUAGE = <Shipment setting>
- LIBRARY CREATOR = LIBRARY
- HISTORY NAME = "HISTORY"
- PLAYER No. = AUTO
- MIDI CHANNEL = 1
- DIGITAL OUT = 24 bit
- AUTO STANDBY = ON
- LCD BRIGHTNESS = 3
- SCREEN SAVER = ON
- DUPLICATION = DEFAULT

<<The state of a key>>
- TIME MODE = REMAIN
- AUTO CUE = OFF
- JOG MODE = CDJ

<<Error history>>
- ALL CLEAR

Switching on a power supply can also perform, pushing a USB-STOP button and EJECT button simultaneously, in order to perform Factory reset.
However, an error history is not cleared at this time.

⑤ Drive Self-Diagnosis

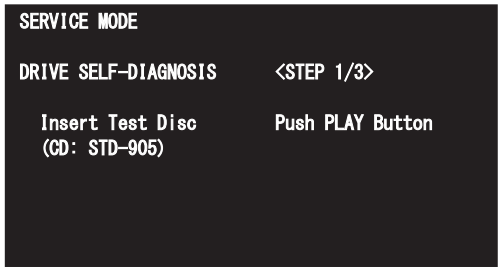

Self-diagnosis of a drive is performed.
Refer to "[5] Drive Self-Diagnosis" and "[6] Contents of drive self-diagnosis" for details.

⑥ Drive operation / error rate measurement



The state of the drive at the time of servo test operation and the measurement result of an error rate are displayed.
Refer to "[7] A check of servo operation of a drive unit" for the details of operation.

Downloaded from www.Manualslib.com manuals search engine

⑦ Drive LD life reset





The addition time which the laser diode of CD/DVD had turned on is reset.
In addition, this is used only once, when a drive unit is exchanged newly.

⑧ Drive LD life manual input

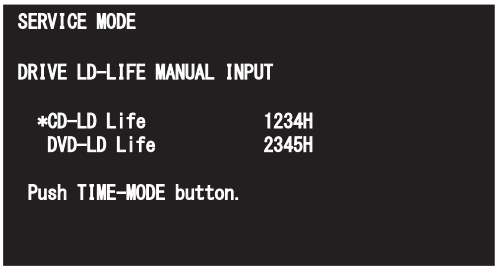

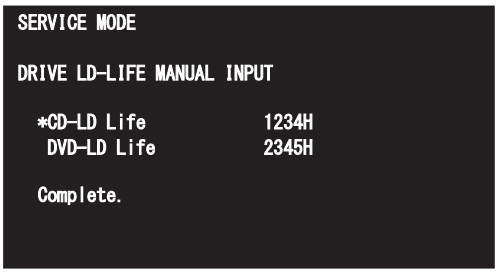

The addition time which the laser diode of CD/DVD had turned on is inputted manually.
In addition, this is used only once, when a main unit is exchanged newly.

QUANTIZE button:	Select CD/DVD
BROWSE button:	Increase the grade of 1000
TAG LIST button:	Increase the grade of 100
INFO button:	Increase the grade of 10
MENU button:	Increase the grade of 1
TIME MODE button:	It memorizes.

⑨ A check of auto standby

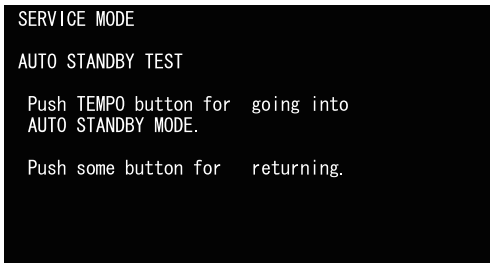

Usually, there are no media to reproduce, and when prolonged operation is not performed, it shifts to the auto standby mode.
However, in this mode, it can shift to the auto standby mode immediately.

If operation excluding the following from the state of being in the auto standby mode is performed,

- Push the USB STOP button
- JOG rotation (except for touching the Table top)
- Turn the TOUCH/BRAKE and RELEASE/START volumes
- Move the TEMPO slider
- Touch the needle search ribbon
- Switch the DIRECTION lever

It will return from the auto standby mode.

Since a return is the same processing as power supply ON, the service mode is ended.

Downloaded from www.Manualslib.com manuals search engine

[4] Error display list

WAVE display shows "E-XXXX: DISC DRIVE ERROR".
Note: An alarm port is a function which outputs a pulse from the test port of SH and tells an unusual part by the number of pulses.

Error code	Display word	Contents	Notes	Alarm port correspondence
E-7001	DISC DRIVE ERROR	The ATAPI drive doesn't function normally.		○
E-7010	DSP DEVICE ERROR	The DSP doesn't function normally. The program isn't available for download.		○
E-7020	USB-B DEVICE ERROR	The USB-B controller doesn't function normally.		○
E-7021	PHY CHIP ERROR	The PHY CHIP doesn't function normally.		○
E-7022	PANEL CPU ERROR	The panel microcomputer doesn't function normally.	It becomes this error when communication with PANEL is not materialized in the abnormalities in wire connection etc. It becomes this error when update of PANEL goes wrong. MAIN detects and an error code is transmitted to GUI.	○
E-7023	GUI CPU ERROR	The GUI CPU doesn't function normally.	It becomes this error when update of GUI goes wrong. GUI displays an error code spontaneously in emergency mode. * If GUI breaks truly, a display will not come out at all.	○
E-7024	MAIN CPU ERROR	The main CPU doesn't function normally.	It becomes this error when update of MAIN goes wrong. MAIN transmits an error code to GUI by emergency mode.	
E-7025	CDC DEVICE ERROR	CDC for needle pads does not operate normally.	CDC = Capacity Digital Converter	○
E-7206	AUTH CHIP ERROR	Apple authentication tip does not operate normally.		○
E-7101	INTERRUPT EXCEPTION	The abnormalities which are not expected on a main CPU occurred.		
E-7201	CANNOT READ DISC	TOC Data can't be read.		
E-8301	CANNOT READ DISC	Abnormalities occurred during starting.		
E-8302	CANNOT PLAY TRACK	Abnormalities occurred during playback.		
E-8303	CANNOT PLAY TRACK	The error of buffer memory writing occurred.		
E-8304	UNSUPPORTED FILE FORMAT	The decoding error occurred.		
E-8305	UNSUPPORTED FILE FORMAT	It is the format which is not supported.		
E-8306	NO FILE	The registered file does not exist.		
E-8307	USB ACCESS ERROR	USB apparatus which is not supported was connected.		
E-8308	SD CARD ACCESS ERROR	MMC (Multi Media Card) was connected.		
E-8309	LINK ACCESS ERROR	It ended in the error of the timeout of continuation 4 times.		
E-8709	COMMUNICATION ERROR	GUI CPU and MAIN CPU cannot be communicated.	When the communication with MAIN is not materialized by the abnormalities of connection, GUI displays an error code spontaneously. When MAIN does not operate completely, it will be in this mode.	
E-9101	MECHANICAL TIMEOUT	Mechanism operation was not completed within regulation time.		

Downloaded from www.Manualslib.com manuals search engine

[5] Drive Self-Diagnosis

Self-diagnosis of a drive is performed through three steps.
It waits to push a button, after are displayed as [Push PLAY Button] at the beginning of each step and inserting a predetermined disc.
If a disk is inserted and PLAY button is pushed, a display of [Executing--] will blink and diagnosis will be started.
After diagnosis is completed successfully, it is displayed as [Complete] and a disk is ejected automatically.
When diagnosis is impossible by a certain cause, it is displayed as follows, and a disk is ejected automatically.

[Mecha Error]	Mechanism errors, such as a loading mechanism, occurred.
[Setup Error]	A disc has not been started.
[Error Stop]	A certain error occurred and stopped in the middle of diagnosis.
[Check Disc]	A disc differs from a predetermined disc.
[No Disc]	A disc is not inserted.

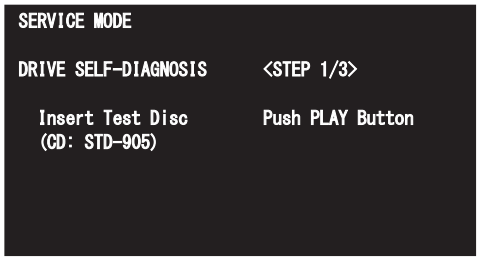

The following items are diagnosed.
Refer to the "[6] Contents of drive self-diagnosis" for the details of each item.

- CD-LD LIFE CHECK
- DVD-LD LIFE CHECK
- FOCUS ACTUATOR CHECK
- TRACKING ACTUATOR CHECK
- STEPPER CHECK
- OEIC CHECK
- DISC MOTOR CHECK
- CD-LD POWER & LENS DIRT CHECK
- OPTICAL SYSTEM DIRT CHECK
- CD ERROR RATE CHECK

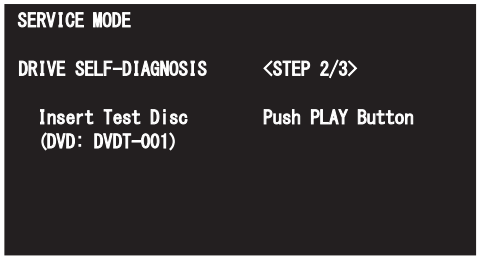

The following items are diagnosed.

- DVD-LD POWER CHECK
- DVD ERROR RATE CHECK

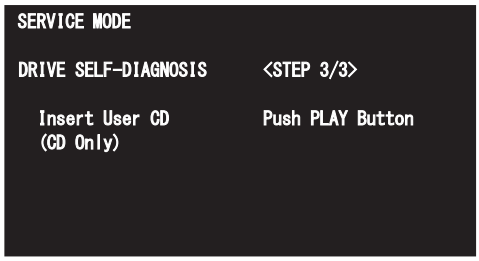

The following items are diagnosed.

- USER CD PHYSICAL CHECK
- USER CD SCRATCH CHECK
- USER CD QUALITY CHECK
- USER CD DIRT CHECK

Downloaded from www.Manualslib.com manuals search engine

Result display

The diagnostic result of each item is displayed by OK/NG. The item which has not yet been diagnosed is displayed as "--."

```
SERVICE MODE

DRIVE SELF-DIAGNOSIS      <RESULT 1/4>

 CD-LD Life Check                OK
 DVD-LD Life Check               7182H
 Focus Actuator Check            OK
 Tracking Actuator Check         OK
```

In "CD-LD Life Check" and "DVD-LD Life Check",
when regulation time (7000 H) is exceeded, time is displayed.
(In within regulation time, OK is displayed and time is not displayed.)

```
SERVICE MODE

DRIVE SELF-DIAGNOSIS      <RESULT 2/4>

 Stepper Check                   NG
 OEIC Check                      OK
 Disc Motor Check                NG
 CD-LD Power & Lens Dirt Check   OK
```

```
SERVICE MODE

DRIVE SELF-DIAGNOSIS      <RESULT 3/4>

 Optical System Dirt Check       OK
 CD Error Rate Check             OK  2.53E-4
 DVD-LD Power Check              OK
 DVD Error Rate Check            OK  3.02E-4
```

The worst value of the measured error rate is displayed
in "CD Error Rate Check" and "DVD Error Rate Check".

```
SERVICE MODE

DRIVE SELF-DIAGNOSIS      <RESULT 4/4>

 User CD Physical Check          —
 User CD Scratch Check           —
 User CD Quality Check           —
 User CD Dirt Check              —
```


Downloaded from www.Manualslib.com manuals search engine

[6] Contents of drive self-diagnosis

STEP 1

(1) CD-LD LIFE CHECK

The addition time which LD had turned on is checked and degradation condition is judged.
If addition time is over 7000 H, display it with NG.
NG judgment reason: Because the Laser Diode becomes 1% of the rate of failure in 7000 H or more.
Over 7000 H in the case of "NG", you measure LD current, and perform failure judgment of the Pickup Assy. (The details of the LD current measurement, see "5.2 FAILURE JUDGEMENT OF THE PICKUP ASSY".)

(2) DVD-LD LIFE CHECK

Same as the above.

(3) FOCUS ACTUATOR CHECK

To detect the disconnection of the actuator.
Current is passed to an actuator using an external circuit, and a disconnection part is detected by reading the voltage value divided by resistance by A/D. State of FFC connector mounting, state of FFC insertion, and disconnection of the actuator are detected synthetically.
Since the probability which Focus and Tracking both disconnect is low, as for the case of both NG, suspect FFC insertion.

(4) TRACKING ACTUATOR CHECK

Same as the above.

(5) STEPPER CHECK

To detect "A stop of the Stepper by foreign substance mixing, the stack, etc", "the defect of an inside switch", and "the step-out of the Stepper by the shortage of lateral-pressure with faulty mechanism parts".
It checks that the Stepper can perform predetermined operation certainly using an inside switch.

(6) OEIC CHECK

To detect omission of OEIC.
It detects by checking disk existence using CD.

(7) DISC MOTOR CHECK

To detect the defect of a spindle motor.
A motor is started and the attainment time to 2000 rpm is checked.

(8) CD-LD POWER & LENS DIRT CHECK

It checks whether CD-LD power adjustment is appropriate and whether the object lens is dirty.
The peak value and bottom value of the main beams A, B, C, and D are measured by A/D, and it judges whether it is the level which can continue a playback.

(9) OPTICAL SYSTEM DIRT CHECK

Same as the above.

(10) CD ERROR RATE CHECK

An error rate is measured and the last check is performed.

STEP 2

(11) DVD-LD POWER CHECK

It checks whether DVD-LD power adjustment is appropriate and whether the object lens is dirty.
The peak value and bottom value of the main beams A, B, C, and D are measured by A/D, and it judges whether it is the level which can continue a playback.

(12) DVD ERROR RATE CHECK

An error rate is measured and the last check is performed.

STEP 3

(13) USER CD PHYSICAL CHECK

When there is offer of a disc from a user, it distinguishes whether it is that a disc is the cause.
The characteristic of a user disk is checked from automatic adjustment value.
A disk uses only CD (from a past actual result).

(14) USER CD SCRATCH CHECK

The error rate of the whole disk is measured per 1 minute, and best value and worst value are calculated.
The state of a disc is checked from those relations.

(15) USER CD QUALITY CHECK

Same as the above.

(16) USER CD DIRT CHECK

Same as the above.

Downloaded from www.Manualslib.com manuals search engine

[7] Confirmation of movement of the drive unit

It is within "[3] Indication of Various Information" mode, and the following control becomes possible when the screen of "⑥ the drive operation/error rate measurement" is chosen.
This mode consists of "player operation mode" and "test operation mode."

<Player operation mode>
Basic operation of Servo, such as setup, play, pause, and track search, is carried out.
Moreover, measurement of an error rate can also be performed.
<Test operation mode>
Servo operation is finely controllable gradually.

* It becomes player operation mode and shifts to test operation mode by the key input in the beginning.
* The command treated here is for mainly testing a mechanism and a servo system, and is not for DJ functions, such as scan and tempo.

Function	Main unit button
<Player operation mode>	
Servo All Off (Stop)	TIME
Play(Trace) / Pause	PLAY/PAUSE
Track Search Fwd/Rev	TRACK SEARCH FWD/REV
Error Rate Count	CUE
Eject	EJECT
Mode Change (-> Test operation mode)	MASTER TEMPO
<Test operation mode>	
Servo All Off	TIME
CD Select	MEMORY
DVD Select	DELETE
Focus Jump Up	LOOP IN
Focus Jump Down	LOOP OUT
Slider Move Fwd	SEARCH FWD
Slider Move Rev	SEARCH REV
Step command	CUE/LOOP CALL NEXT(►)
Mode Change (->Player operation mode)	MASTER TEMPO

■ Player operation mode command

Play(Trace) / Pause

If it is in a stop state, it will set up and play. Moreover, if it is in a play state, whenever it will push a button, a pause and a play are carried out by turns.
It is displayed on a drive state display part as "PLAY or PAUSE."
In the case of CD, the track number and time under present trace are displayed.
In the case of DVD, the layer number under present trace is displayed on the place of TRACK, and it displays a physical address on the place of MSF.
Note: In this mode, even if it inserts a disk, an automatic setup is not carried out.
Moreover, a play is not carrying out audio reproduction, but is tracing the signal side of a disk.

Track Search F/R

Search a track displayed by a FWD / REV course and, in the case of a CD, do pause.
It is indicated with [SEARCH] in the drive condition indication part.
Note: A track search is not possible in CD-ROM (MP3/AAC/WAV/AIFF).

Whenever a FWD / REV direction is pushed, search it with the following turn and, in the case of DVD, do a pause.
When a FWD direction was pushed with DUAL LAYER DISC.

→ L0 inside → L0 middle → L0 outside → L1 inside → L1 middle → L1 outside →

When a REV direction was pushed with DUAL LAYER DISC.

← L0 inside ← L0 middle ← L0 outside ← L1 inside ← L1 middle ← L1 outside ←

When a FWD direction was pushed with SINGLE LAYER DISC.

→ L0 inside → L0 middle → L0 outside →

When a REV direction was pushed with SINGLE LAYER DISC.

← L0 inside ← L0 middle ← L0 outside ←

Downloaded from www.Manualslib.com manuals search engine

It is indicated in the indication part as follows.

[SEARCH L0 IN]	Layer 0 inside	[SEARCH L1 IN]	Layer 1 inside
[SEARCH L0 MID]	Layer 0 middle	[SEARCH L1 MID]	Layer 1 middle
[SEARCH L0 OUT]	Layer 0 outside	[SEARCH L1 OUT]	Layer 1 outside

Note: A search address is different in inside/middle/outside at total capacity of a Disc in a relative address. Outside searches about 20000 sector I than a Disc most circumference address.

Error Rate Count

Measure an error rate of 10000 blocks in the case of DVD in the case of a CD from a present position doing a play/pause for about 20 seconds and display a measurement result in FL.
Usually, a track to measure is made to search and this button is inputted from a pause state.
For example, it is displayed as "3.56E-4 O.K." etc.
If an error rate is less than 3.00E-3, it will be displayed as O.K. If an error rate is larger than 3.00E-3, it will be displayed as NG. Measurement with the managed disk at the time of factory shipments is a premise.
The product does not judge whether they are inferior goods at the time of service.

Eject

A disk is ejected. It is indicated with [EJECT] in the indication part.

Mode Change (It shifts to the Test opalation mode.)

If the MASTER TEMPO button is pushed into player operation mode, MASTER TEMPO LED will light up, and it will shift to the below-mentioned "test operation mode." It is indicated with [TEST MODE] in the indication part.

■ Test operation mode command

Serbo operation is finely controllable gradually.
Keep in mind a test operation mode command that it may give a damage to a player as mistaking the usage.
Please operate this mode after making a dis c a set completion state.
Note: Operate it after you take a state of loading in.

Servo All Off

When servo is ON, all servo will be turned off if the TIME button is pushed.
It is indicated with [ALL OFF] in the indication part.

CD Select

When you start a CD, push a MEMORY button and choose a CD.
It is indicated with [CD SELECT] in the indication part.

DVD Select

When you start a DVD, push a CALL button and choose a DVD.
It is indicated with [DVD SELECT] in the indication part.

Focus Jump Up

In DVD choice, a focus jumps in L1.
It is indicated with [FOCUS JUMP UP] in the indication part.

Focus Jump Down

In DVD choice, a focus jumps in L0.
It is indicated with [FOCUS JUMP DOWN] in the indication part.

Slider Move Fwd

You send about 1.8 mm sliders to a circumference direction whenever you push a SEARCH FWD button.
It is indicated with [SLIDER FWD] in the indication part.

Slider Move Rev

You send about 1.8 mm sliders to an internal circumference direction whenever you push a SEARCH REV button.
It is indicated with [SLIDER REV] in the indication part.

Downloaded from www.Manualslib.com manuals search engine

Step command

Perform the serial movement of the setup by a step.

If a CUE/LOOP CALL NEXT (►) button is pushed, it will step up (even if it pushes PREV (◄) button, the stripes of the step down are not carried out). Operation and a display of each step are as follows.

Step	Action	Indication Part
STEP0 :	Servo All Off	ALL OFF
STEP1 :	Laser diode on	LD ON
STEP2 :	Disc presence judgment	DISC SEARCH
STEP3 :	Spindle on (2000 rpm)	SPINDLE ON
STEP4 :	Disc sense	DISC SENSE
STEP5 :	Focus serve on	FOCUS ON
STEP6 :	Tracking servo on	TRACKING ON
STEP7 :	Focus position coarse adjustment	FOCUS POSITION
STEP8 :	Focus gain adjustment	FOCUS GAIN
STEP9 :	Tracking gain adjustment	TRACKING GAIN
STEP10 :	Address lead start	ADDRESS READ

CUE/LOOP CALL NEXT (►) button : step up

Mode Change (The end of the test movement mode)

If the MASTER TEMPO button is pushed into "test operation mode", MASTER TEMPO LED will light out, and it will shift to the above-mentioned "player operation mode." It is indicated with [PLAYER MODE] in the indication part.

Downloaded from www.Manualslib.com manuals search engine

[8] Output of the alarm port

Although "Normal/abnormalities of each device at the time of power supply ON and initialization" can be judged by ③ Auto device diagnosis of a "[3] Indication of various information", the test port output on a main board can also be checked.

When a defect is detected by the device by power supply ON, an alarm port performs the following pulse outputs.

		Alarm Port			Service Mode/Auto Device Diagnostic Display		Normal Error Display
		Detection	Remarks	Output Pattern	Display	Remarks	
Main CPU							
	Flash (for Main CPU)	×	If Flash is NG, the boot program itself does not operate.		×	←	
	SDRAM (for Main CPU)	○		(0.5sHI->0.5sLOW) x once ->2sLOW->Afterward,repetition	×	If SDRAM is NG, the service program itself does not operate.	
Peripheral with built-in Main CPU							
	IDE (DRIVE)	○		(0.5sHI->0.5sLOW) x 7 times ->2sLOW->Afterward,repetition	○		E-7001
	USB-A	—	Since it is built-in Main CPU, it is hard to consider that peripheral one of these becomes out of condition at pinpoint. It cannot judge whether all have fault in the course to a connector.		—		
	SD	—			—	←	
	LAN	—			—		
External peripheral							
	USB-B (USB CONTROLLER)	○		(0.5sHI->0.5sLOW) x 4 times ->2sLOW->Afterward,repetition	○		E-7020
	PHY chip (PHY CHIP)	○		(0.5sHI->0.5sLOW) x 3 times ->2sLOW->Afterward,repetition	○		E-7021
	AUTH chip (AUTH CHIP)	○		(0.5sHI->0.5sLOW) x 9 times ->2sLOW->Afterward,repetition	○		E-7206
Device communicated with Main CPU							
	PANEL microcomputer (PANEL)	○		(0.5sHI->0.5sLOW) x 5 times ->2sLOW->Afterward,repetition	△	Although detection is possible in communication failure, since it does not put into the service mode, a check is correctly impossible.	E-7022
	DSP (DSP)	○		(0.5sHI->0.5sLOW) x twice ->2sLOW->Afterward,repetition	○		E-7010
	SDRAM (for DSP)	×	If SDRAM is NG, it cannot communicate with Main CPU.		×	←	
	GUI CPU (GUI)	○		(0.5sHI->0.5sLOW) x 6 times ->2sLOW->Afterward,repetition	△	Although detection is possible in communication failure, since it cannot display on LCD, a check is correctly impossible.	
	Flash (for GUI CPU)	×	If Flash is NG, the boot program itself does not operate.		×	←	
	SDRAM (for GUI CPU)	×	If SDRAM is NG, it cannot communicate with Main CPU.		×	←	
External peripheral communicated with PANEL microcomputer							
	CDC	○		(0.5sHI->0.5sLOW) x 8 times ->2sLOW->Afterward,repetition	○		E-7025
Altogether normal				After 2sHI as LOW			

Downloaded from www.Manualslib.com manuals search engine

[9] Firmware update

The device and updater file name for update is the following.

Device	File Name	Remarks
Main CPU (MAIN)	C2KNXSM.UPD	Motorola formal text
GUI CPU (GUI)	C2KNXSG.UPD	Binary text
Panel microcomputer (PANEL)	C2KNXSP.UPD	Motorola formal text
Drive controller (DRIVE)	C2KNXSD.UPD	Motorola formal text
Four devices (one conclusion)	C2KNXS.UPD	Mixture of text form and binary form

A version is not contained in a file name.
Since the character sequence containing a version etc. is added to the head of each file, it can check by the editor, viewer, etc.
Moreover, "C2KNXS.UPD" which connected four files can be read.

■ When USB memory is used

Please use USB memory formatted by FAT/FAT32. It does not correspond to HFS+.

① A file to update is copied to USB memory.
(One files will be copied if it is one pieces. Two files will be copied if it is two pieces. ……(It is one file if it is "C2KNXS.UPD"))

② Please turn on a power supply, pushing both the buttons of MEDIA SELECT/USB and RELOOP.
(Please continue pushing until "Pioneer LOGO"screen disappears.)
It is displayed the message of "Connect a USB storage device to the USB port.", USB memory is inserted in USB port of the front or the back. (If USB memory is put and it goes into the mode, a message will not be displayed but update will start immediately.)

③ Update is automatically performed in the order of "GUI -> drive -> main -> panel".
The status is displayed with the bar graph and % as follows during update. Moreover, an old version and a new version are also displayed.

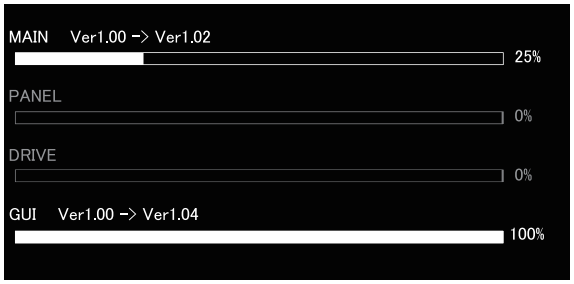

④ When there is no file, gray out of the display of the device is carried out, and update is not performed.
And, %-display is a standard and is not exact.

⑤ Since the message of "Firmware update is completed.Turn the power off before using." will be displayed if update is completed, please return on a power supply.

■ When CD-R/RW is used

① A file to update is copied to CD-R/RW.
(One files will be copied if it is one pieces. Two files will be copied if it is two pieces. ……(It is one file if it is "C2KNXS.UPD"))

② Please turn on a power supply, pushing both the buttons of MEDIA SELECT/DISC and RELOOP.
(Please continue pushing until "Pioneer LOGO"screen disappears.)
Insert CD-ROM, if the message "Insert CD-ROM disc" is displayed.

③ The rest is the same as that of the case where USB memory is used.

Downloaded from www.Manualslib.com manuals search engine

■ Recovery when failing

When update of each CPU goes wrong and the power supply has been turned off on the way, subsequent normal operation becomes impossible. In this case, the recovery (emergency) mode which only updates operates.
In addition, please carry out by USB memory in recovery. CD-ROM cannot be used.

① Failure of a MAIN
When the message of "MAIN firmware update failed." is displayed or the power supply has been turned off on the way, if a power supply is returned on again, the error code of "E-7024: MAIN CPU ERROR" will be displayed.
In this case, update will be possible if it usually carries out again using a passage MEDIA SELECT/USB button and RELOOP button.
In addition, only MAIN is updated even if files other than MAIN are in USB memory.
If the unit cannot be recovered after a retrial of downloading, a part may be defective. Replace the whole MAIN Assy.
(This is because provision of a FLASH ROM in which a specific MAC address has been written is not possible.
For details, see section "1.3 SERVICE NOTICE_■ Flash ROM").

② Failure of a GUI
When the message of "GUI firmware update failed." is displayed or the power supply has been turned off on the way, if a power supply is returned on again, the error code of "E-7023: GUI CPU ERROR" will be displayed.
In this case, update will be possible if it usually carries out again using a passage MEDIA SELECT/USB button and RELOOP button.
In addition, if files other than GUI are contained in USB memory, it will usually pass and all they will be updated.
If the unit cannot be recovered after a retrial of downloading, a part may be defective. Replace the IC4004 (FLASH ROM).

③ Failure of a PANEL
When the message of "PANEL firmware update failed." is displayed or the power supply has been turned off on the way, if a power supply is returned on again, the error code of "E-7022: PANEL CPU ERROR" will be displayed.
In this case, how to the update mode to enter differs from usual.
Please continue pushing a button until it turns on a power supply and the message of "Connect a USB storage device to the USB port." is displayed, pushing only a USB-STOP button.
In addition, if files other than PANEL are contained in USB memory, it will usually pass and all they will be updated.
If the unit cannot be recovered after a retrial of downloading, a part may be defective. Replace the IC8003 (PANEL CPU).

④ Failure of a DRIVE
When the message of "DRIVE firmware update failed." is displayed or the power supply has been turned off on the way, if a power supply is returned on again, the error code of "E-7001: DISC DRIVE ERROR" will be displayed.
In such a case, the unit cannot be recovered by a retrial of downloading. Replacement of IC7004 (FLASH ROM) is required.

Downloaded from www.Manualslib.com manuals search engine

6.2 ABOUT THE DEVICE

Device Name	Function	Part No.	Ref No.	Assy
MAIN CPU	Main control	R5S77641N300BG	IC10	MAIN Assy
FLASH	Memory for MAIN CPU (Firmware)	DYW1814 (*NSP)	IC3	MAIN Assy
SDRAM	Memory for MAIN CPU (Work)	M12L2561616A-5TG2A	IC1, 2, 12, 13	MAIN Assy
DSP	Audio DSP	D810K013CZKB400	IC301	MAIN Assy
SDRAM	Memory for DSP (Work)	M12L2561616A-5TG2A	IC302	MAIN Assy
USB_B CONTROLLER	CONTROLLER for USB-B (function)	M66291GP	IC701	MAIN Assy
ETHER PHY	PHY for LINK	RTL8201FL-VB-CG	IC704	MAIN Assy
AUTHENTICATION CHIP	The authentication of Apple.	337S3959	IC14	MAIN Assy
GUI CPU	LCD display control	ADSP-BF531SBSTZ400	IC4001	TFTA Assy
FLASH	Memory for GUI CPU (Firmware)	DYW1815	IC4004	TFTA Assy
SDRAM	Memory for GUI CPU (Work)	M12L2561616A-5TG2A	IC4005	TFTA Assy
PANEL CPU	Button input, LED & JOG FL control	DYW1817	IC8003	PNLB Assy
SODC	Disc drive control	MN103S71F	IC7006	SRVB Assy
FLASH	Memory for DRIVE CONTROLLER	DYW1816	IC7004	SRVB Assy
CDC	Contact position detection of a needle pad	AD7147ACPZ500RL7	IC5001	CDCB Assy

Two or more FLASH and SDRAM are mounted in the main body.
Please diagnose it after confiming whether it is a device that agrees with purpose again.

Downloaded from www.Manualslib.com manuals search engine

7. DISASSEMBLY

Note:
(1) Do NOT look directly into the pickup lens. The laser beam may cause eye injury.
(2) Even if the unit shown in the photos and illustrations in this manual may differ from your product, the procedures described here are common.

Diagnosis of SRVB Assy

(1) Remove the two screws. (BPZ30P100FTB)
(2) Remove the five screws. (BPZ30P080FNI)
(3) Remove the plate.

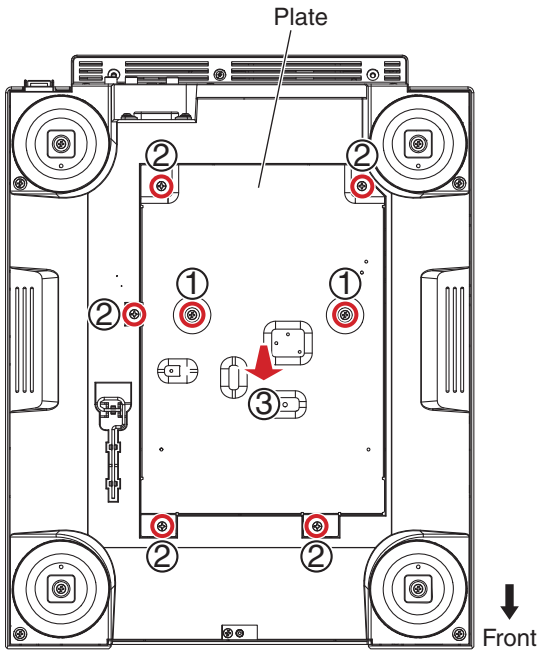

• Bottom view

Diagnosis

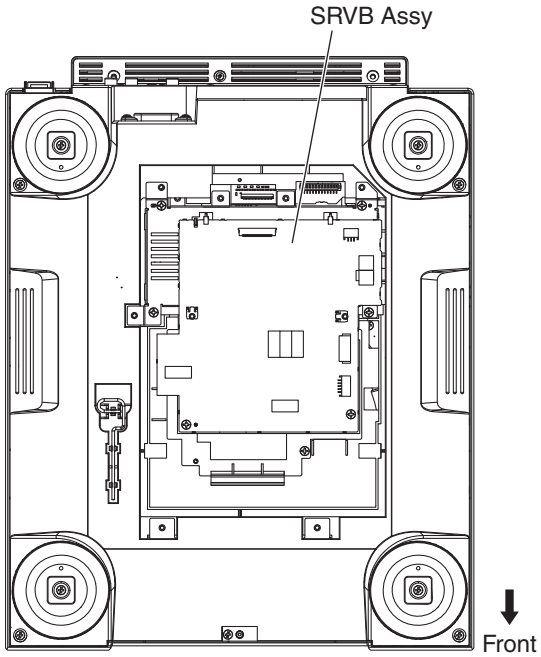

• Bottom view

Downloaded from www.Manualslib.com manuals search engine

Diagnosis of MAIN Assy

[1] Control Panel Section

(1) Remove the two screws.
(BBZ30P060FTB)
(2) Remove the five screws.
(BPZ30P080FNI)

Screw tightening order

The other screws are random order.

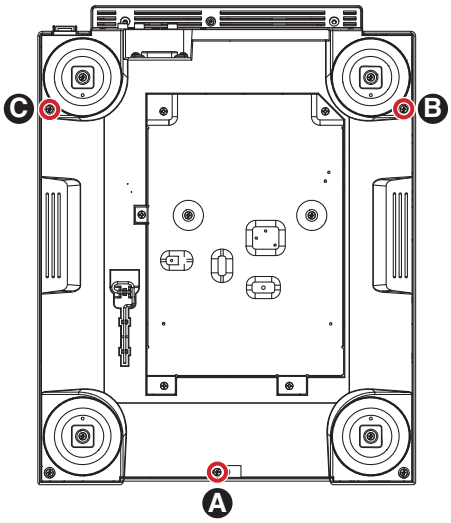

• Bottom view

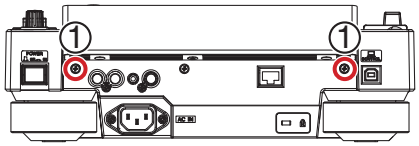

• Rear view

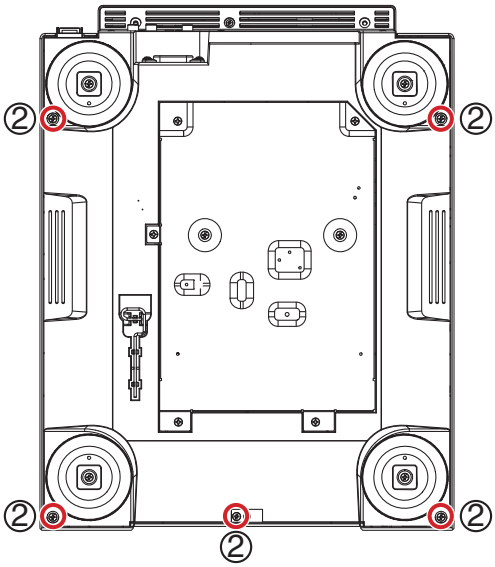

• Bottom view

(3) Remove the control panel section.

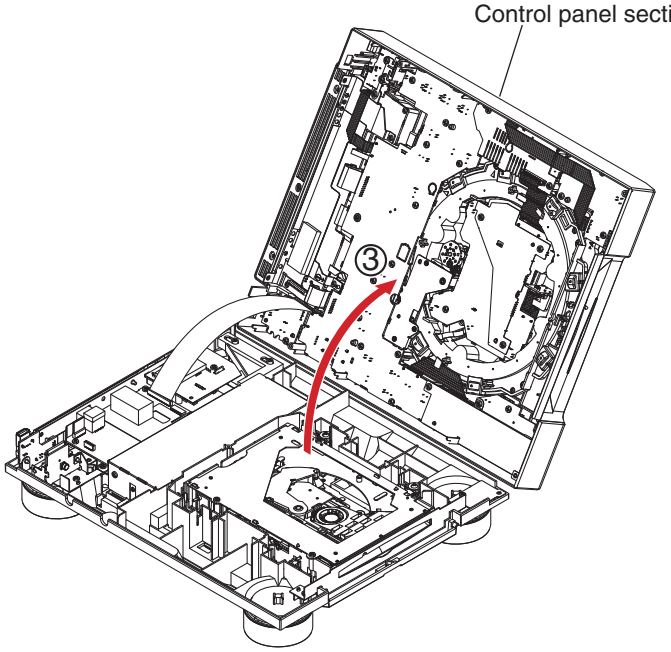

Downloaded from www.Manualslib.com manuals search engine

[2] MAIN and JACB Assemblies

(1) Remove the two screws.
(PPZ30P080FTB)

Screw tightening order

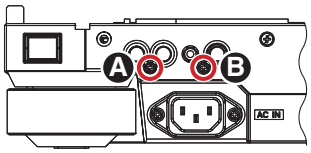

• Rear view

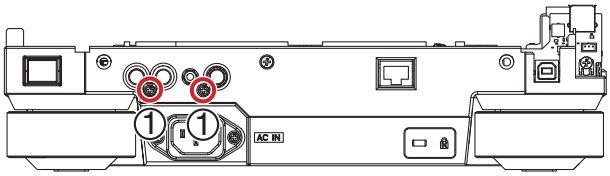

• Rear view

(2) Remove the one rivet.
(3) Remove the jack cover by removing the one screw.
(BPZ30P080FNI)
(4) Remove the main cover by removing the one screw.
(BBZ30P060FTB)

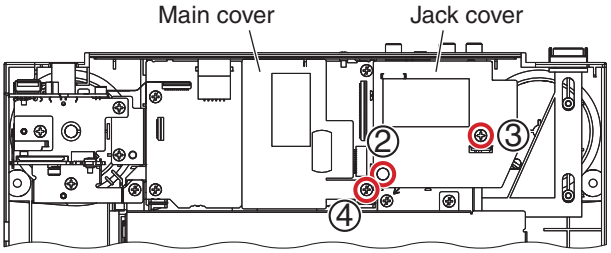

(5) Disconnect the two flexible cables.
(CN702, 703)
(6) Remove the three screws.
(BBZ30P060FTB)

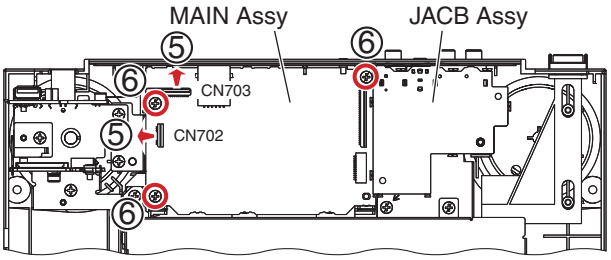

Screw tightening order

The other screws are random order.

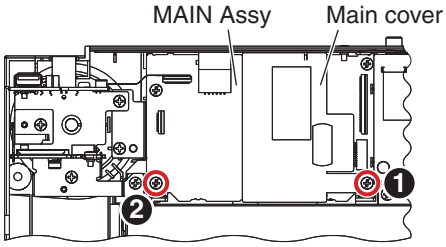

(5) Stand the MAIN and JACB Assemblies.

Diagnosis

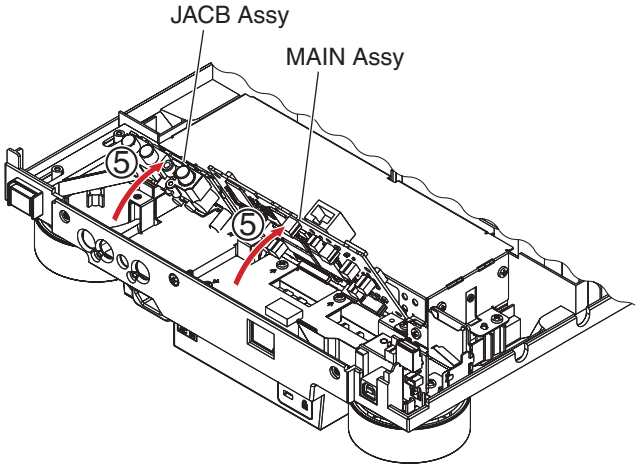

Downloaded from www.Manualslib.com manuals search engine

Slotin Mechanism Section

[1] Mecha Plate

(1) Remove the four screws.
(BPZ30P080FNI)
(2) Remove the mecha plate.

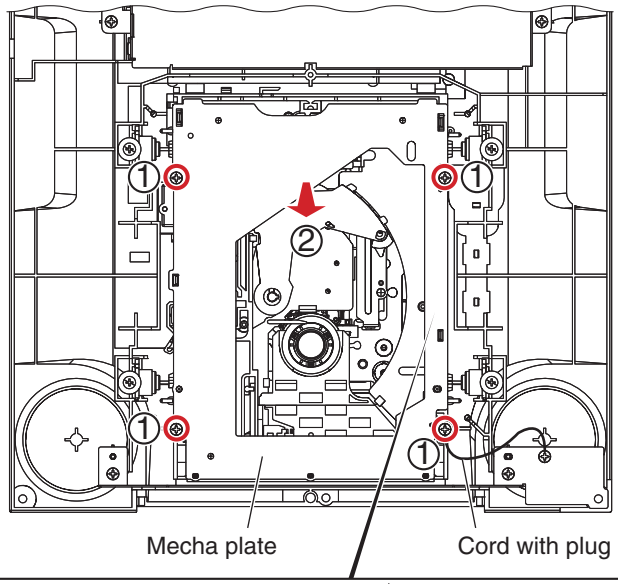

Note of earth spring
- Be sure not to lose it.
- Be careful to the installation places.
- Confirm it by viewing.

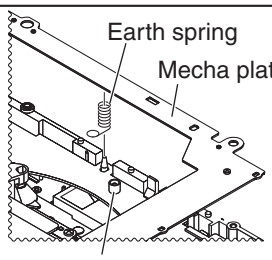

[2] Slotin Mechanism Section

(1) Unhook the four hooks.
(2) Release the jumper wires, as required.
(3) Remove the slotin mechanism section.

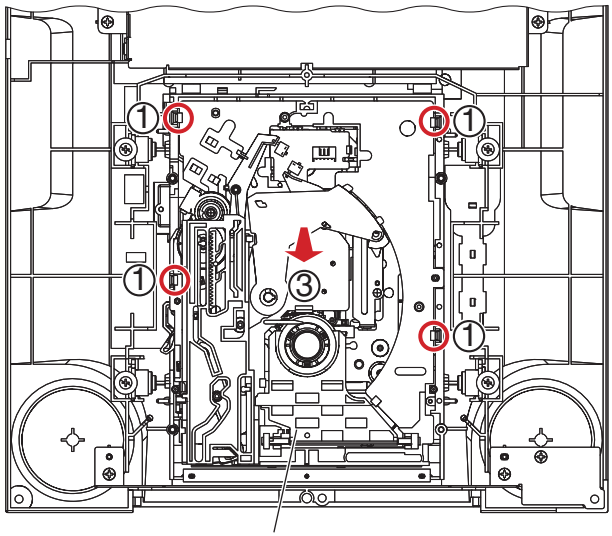

Downloaded from www.Manualslib.com manuals search engine

TM Assy-S

[1] Float Base Section

(1) solder the short-circuit point. (short)

Note:
After working, connect the flexible cable, then remove the soldered joint (open).

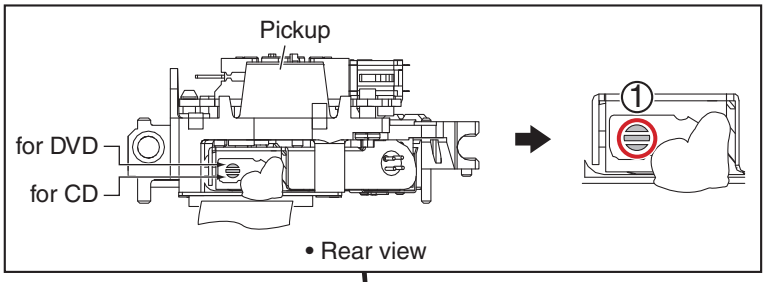

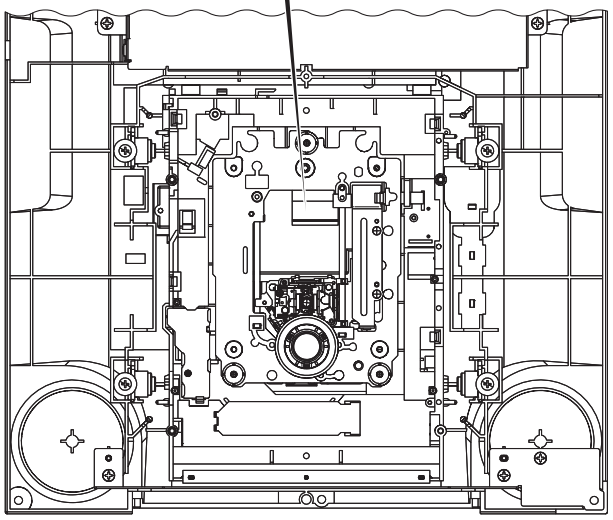

(2) Disconnect the one connector and three flexible cables.
(CN7001, 7003, 7004, 7009)

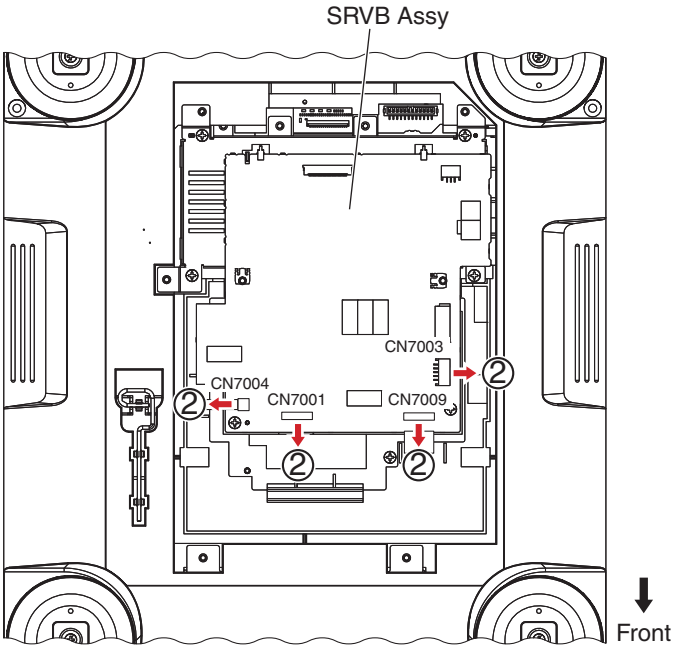

Downloaded from www.Manualslib.com manuals search engine

(3) Remove the four DM screws. (DBA1260)

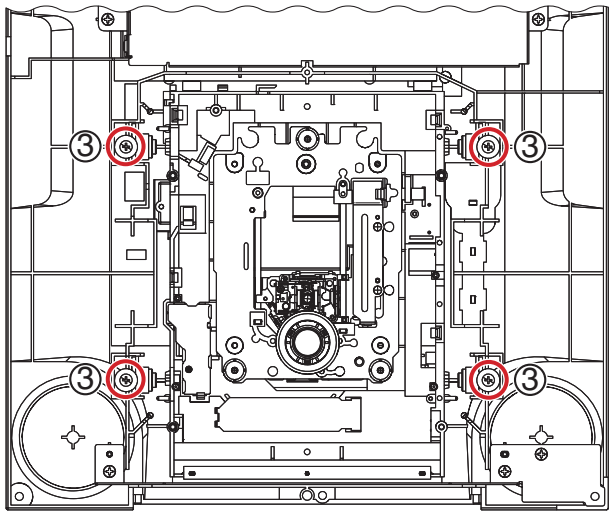

(4) Remove the four float springs (G5).
(5) Hook the four float springs G5 to the four hooks of the float base G11 Assy.

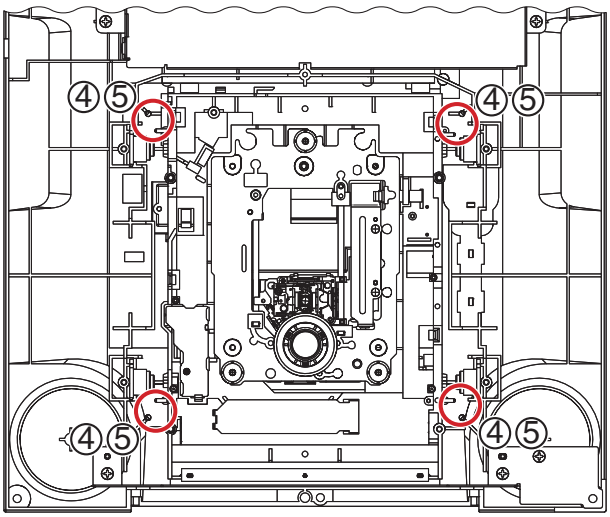

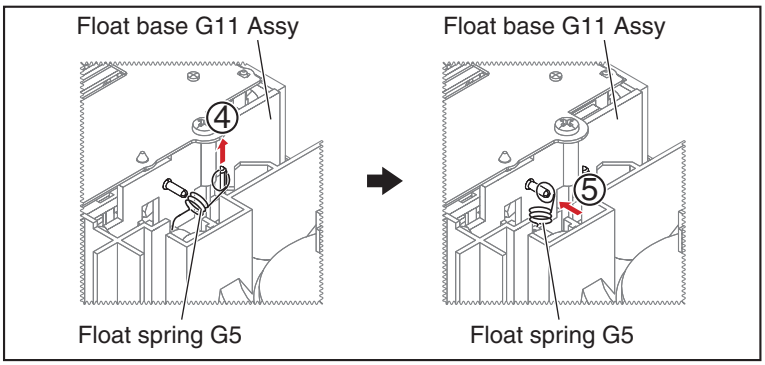

Downloaded from www.Manualslib.com manuals search engine

(6) Remove the float base section.

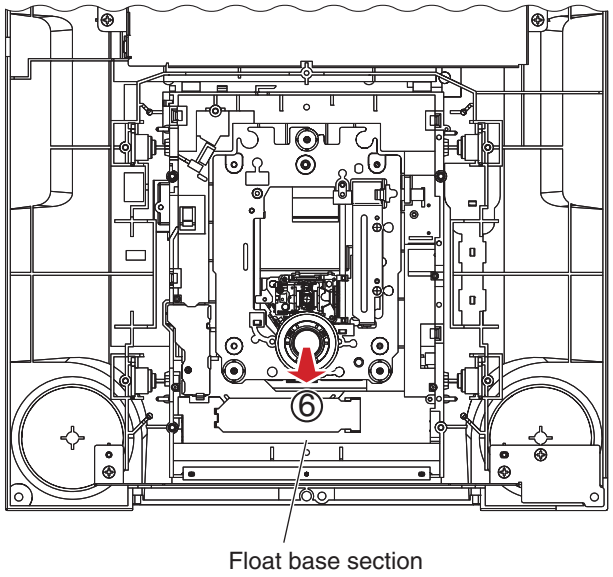

Direction of the dampers when attaching them
When attaching the dampers, place them so that their projections (large) face rear.

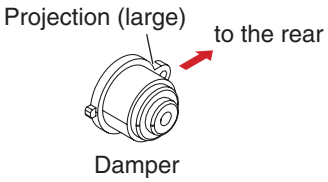

Arrangement of the jumper wires

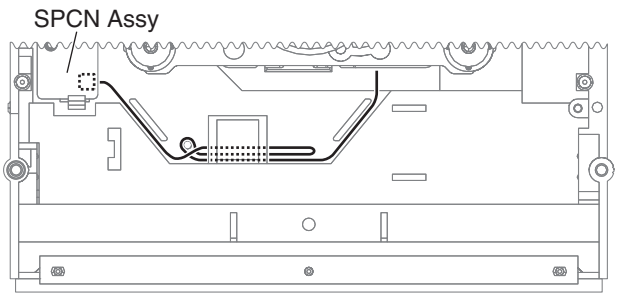

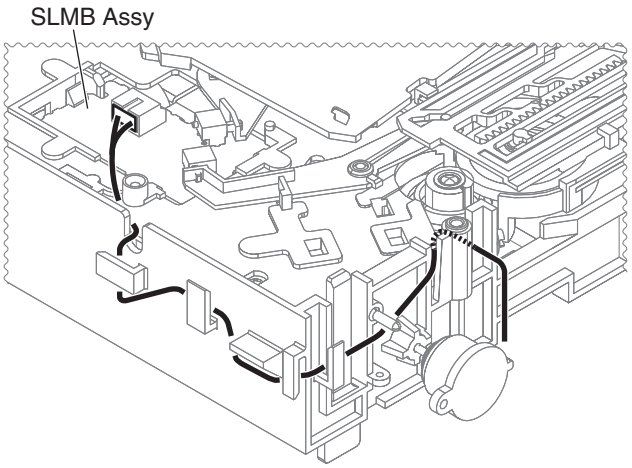

[2] TM Assy-S

(1) Remove the three float screws. (DBA1286)
(2) Remove the TM Assy-S.
(3) Remove the one screw. (IPZ20P060FTC)
(4) Unhook the two hooks.
(5) Remove the SPCN Assy.

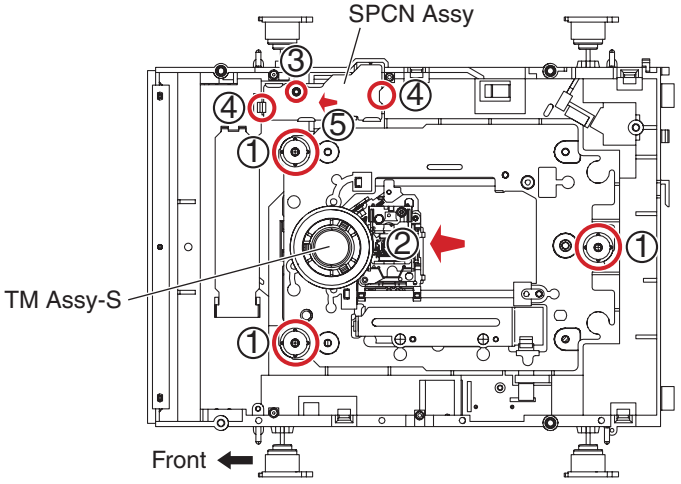

Downloaded from www.Manualslib.com manuals search engine

Cleaning the pickup lens

Before shipment, be sure to clean the pickup lens, using the following cleaning materials:

Cleaning liquid : GEM1004
Cleaning paper: GED-008

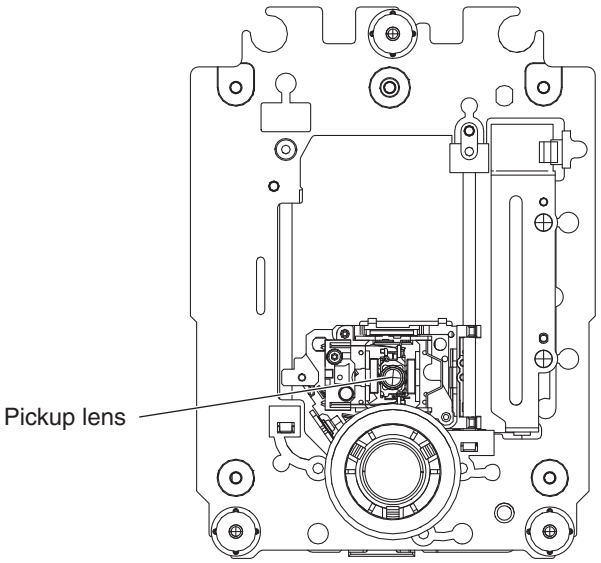

Reference information

Screw tightening order (Stay/USB)

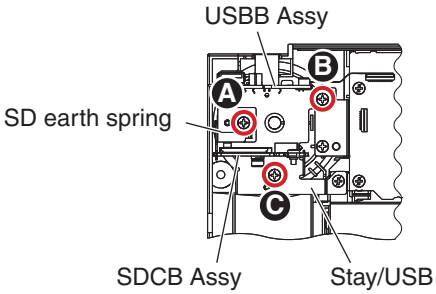

Screw tightening order (SWPS stay)

The other screws are random order.

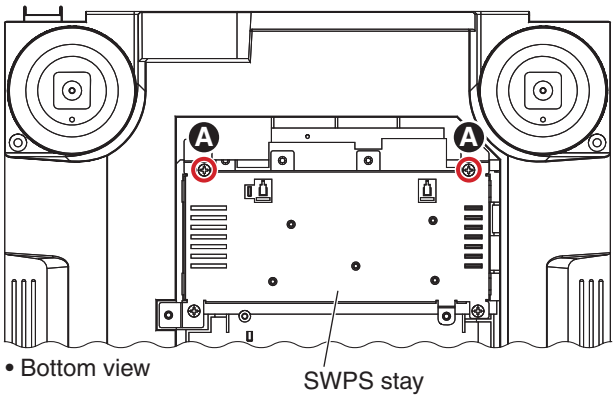

Screw tightening order (Front plate)

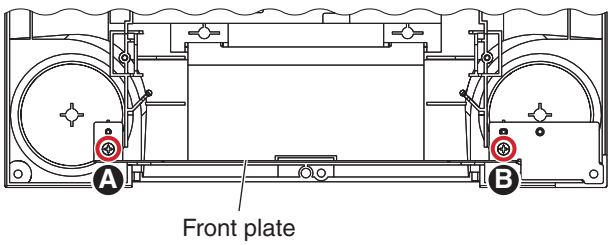

Downloaded from www.Manualslib.com manuals search engine

JOG Dial Section

(1) Remove the adjust knob black.

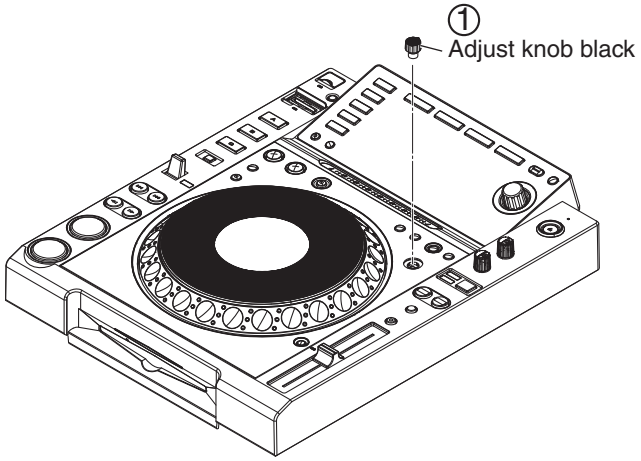

(2) Disconnect the one flexible cable and one connector.
(CN8501, 8801)
(3) Remove the six screws.
(BPZ30P080FNI)
(4) Remove it while pulling JOG dial section in front side.

Screw tightening order

The other screws are random order.

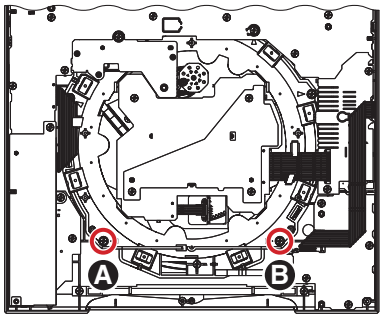

• Bottom view

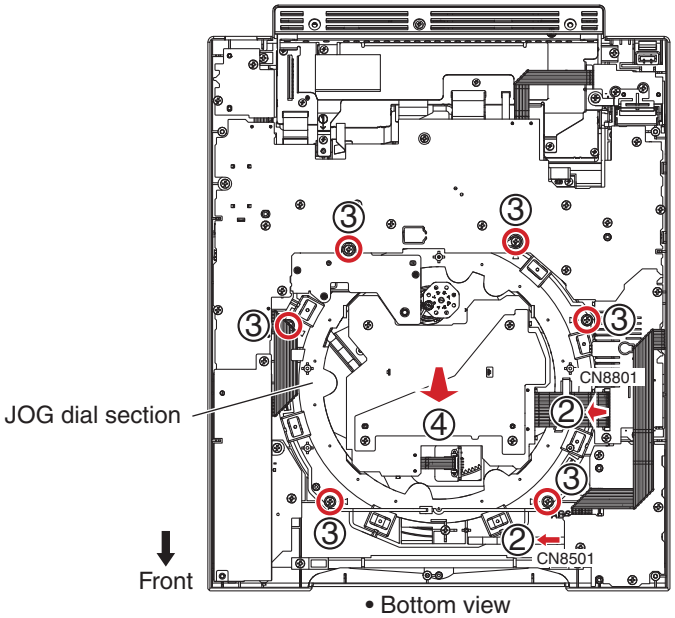

• Bottom view

Position of the Adjust plate

About details of Adjustment etc., refer to the "8.3 JOG DIAL ROTATION LOAD ADJUSTMENT".

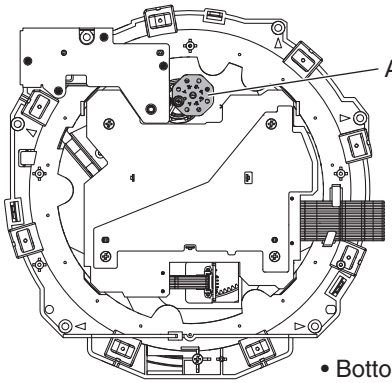

• Bottom view

Downloaded from www.Manualslib.com manuals search engine

(5) Unhook the three hooks.
(6) Remove the JOG section.

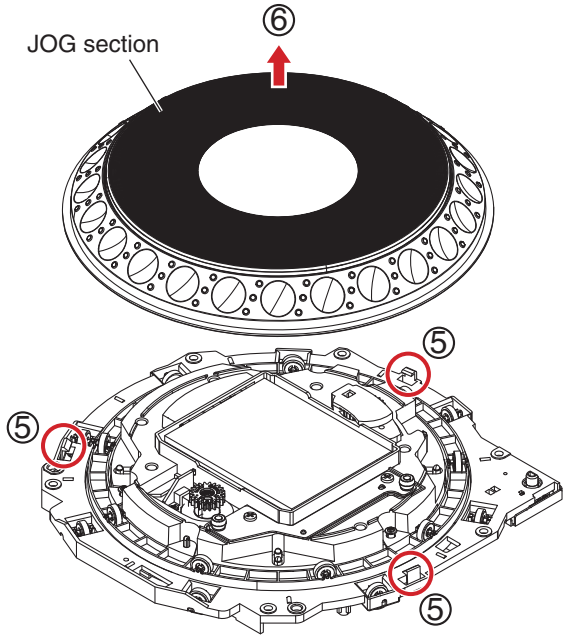

(7) Remove the three screws.
(DBA1265)
(8) Remove the SW ring.

Note:
Be careful not to lost SW spring.

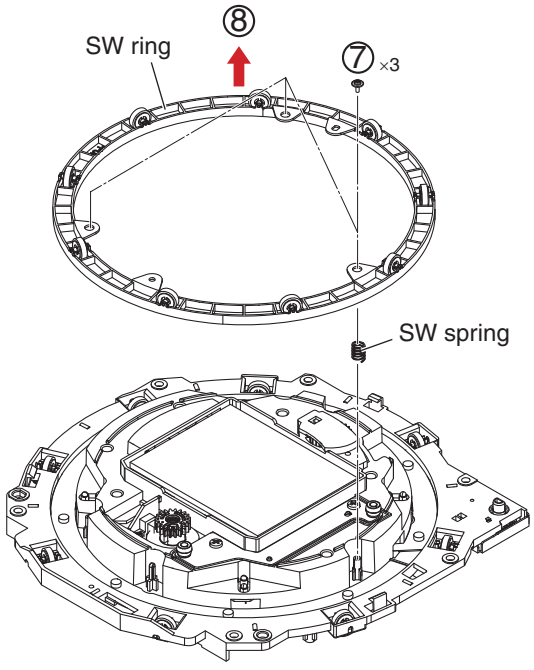

Downloaded from www.Manualslib.com manuals search engine

Notes on replacing the Sheet SW

Styling of the Sheet SW

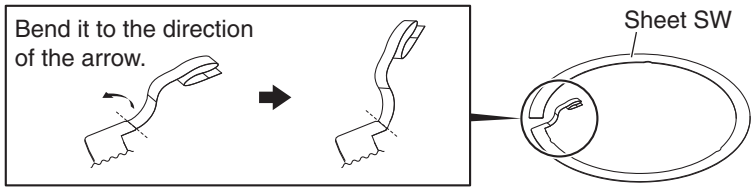

Notes on replacing the Sheet SW

Pasting position of the Sheet SW

Notes:

1. Be careful not to warp the sheet SW.
2. Remove any dirt on the holder/JOG to which the sheet SW is to be adhered. If some adhesive for the old sheet SW remains on the holder/JOG, completely remove it with a cloth moistened with alcohol.
3. Do NOT place the sheet SW so that it is mounted on the rib of holder/JOG.
4. When adhering the sheet SW, be careful not to trap air bubbles in it. If air bubbles are formed, remove the sheet SW and adhere a new sheet SW. Do NOT reuse the removed sheet SW.
5. When making a connection, be sure to first release the lock of the connector then securely relock the connector after making the connection.

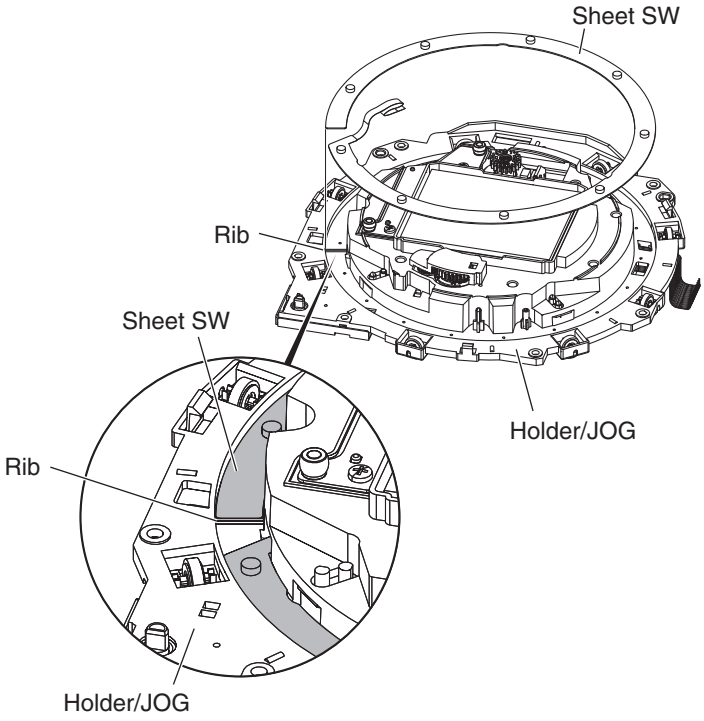

Pasting position of the SW cushion HH48/2

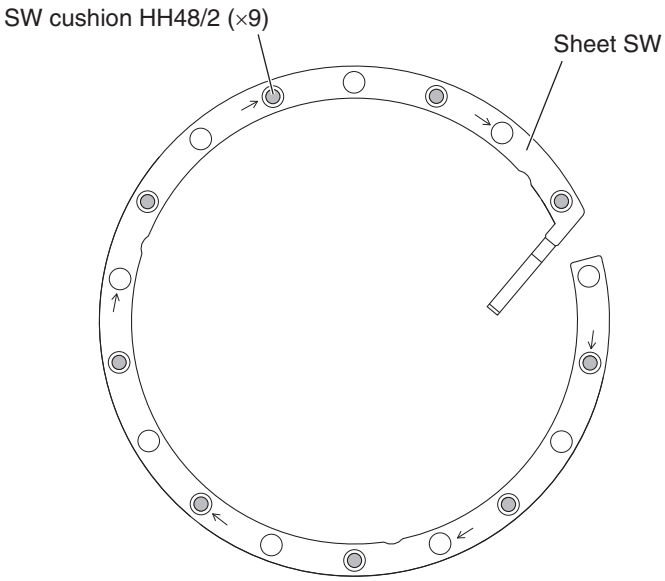

Downloaded from www.Manualslib.com manuals search engine

Alignment of the Rack Plate

Place the rack plate so that its teeth are engaged with those of the gears and its triangular marks are positioned as shown in the figure.

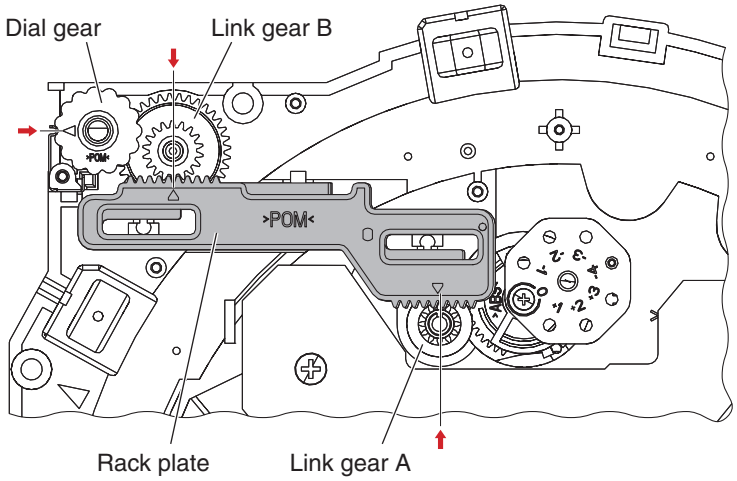

Reference information

Screw tightening order (JFLB Assy)

The other screws are random order.

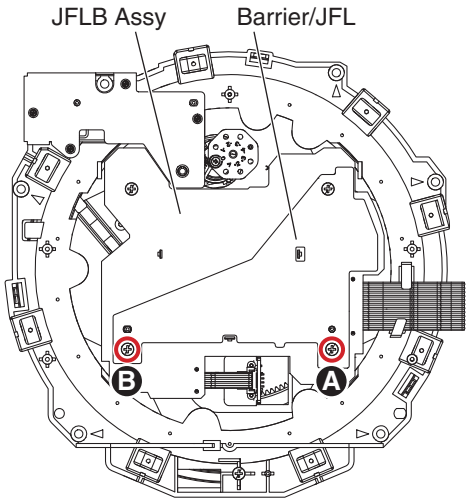

• Bottom view

Screw tightening order (Stay Assy/JOG)

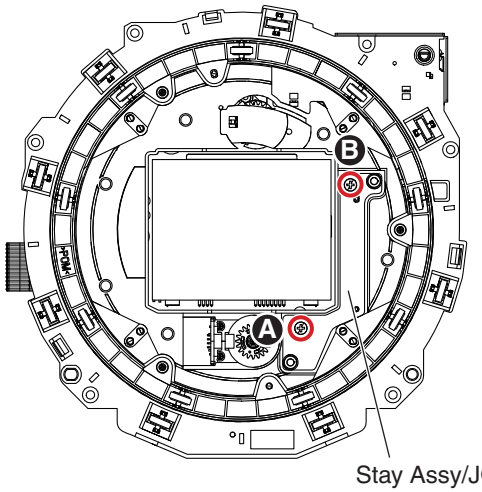

Downloaded from www.Manualslib.com manuals search engine

Control Panel Section / Display Section

[1] PNLB, EUPB, SLDB, KSWB, CNCT and SDSW Assemblies

(1) Remove the knob/SLD.
(2) Remove the two knobs.

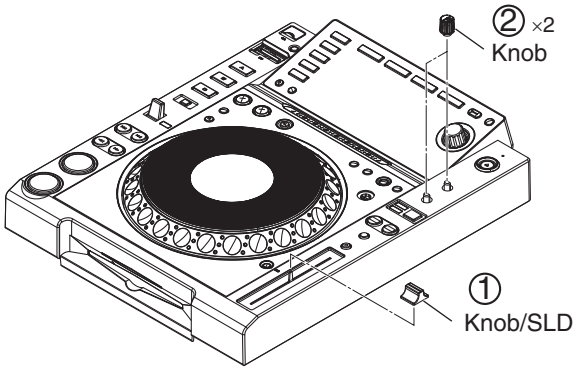

(3) Remove the one screw.
(BBZ30P060FTB)
(4) Remove the leaf spring/SD by removing the two screws.
(BPZ30P080FNI)
(5) Remove the earth plate by removing the two screws.
(BPZ30P080FNI)

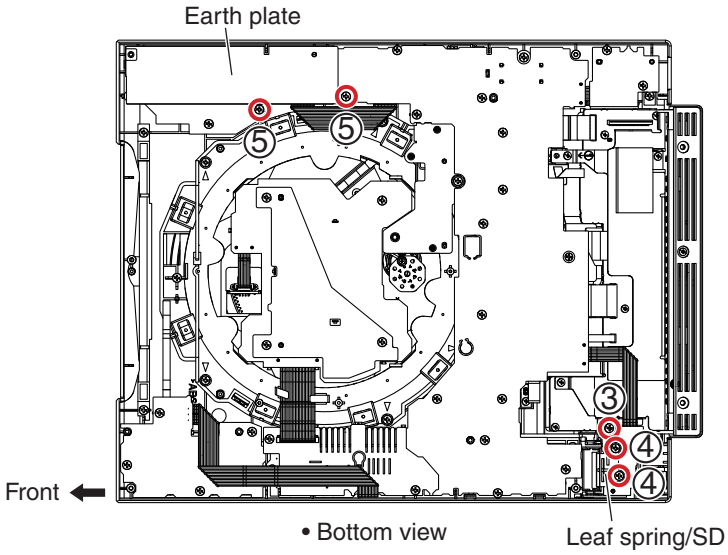

(6) Disconnect the four flexible cables and one connector.
(CN4007, 4012, 8003, 8501, 8801)
(7) Remove the one screw.
(ABZ30P060FTC)
(8) Remove the PNLB, EUPB, SLDB, KSWB, CNCT and SDSW Assemblies by removing the 27 screws.
(BPZ30P080FNI)

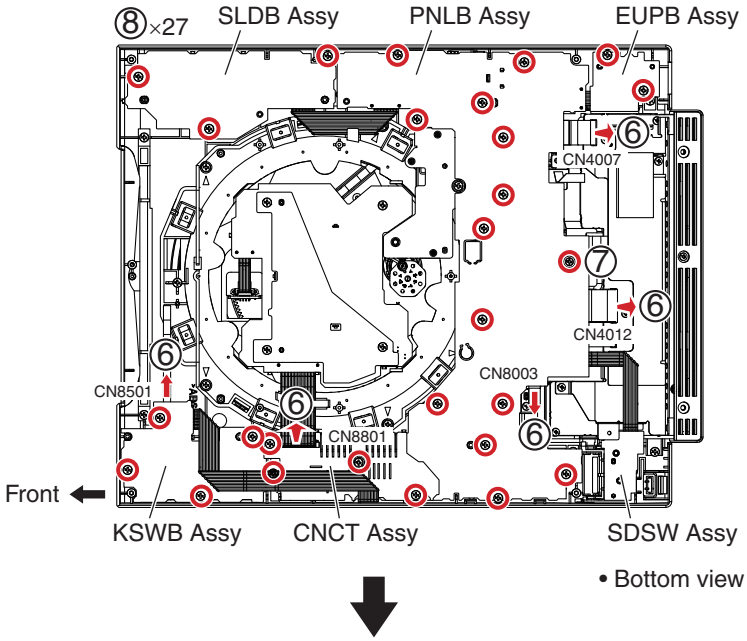

Downloaded from www.Manualslib.com manuals search engine

Screw tightening order

The other screws are random order.

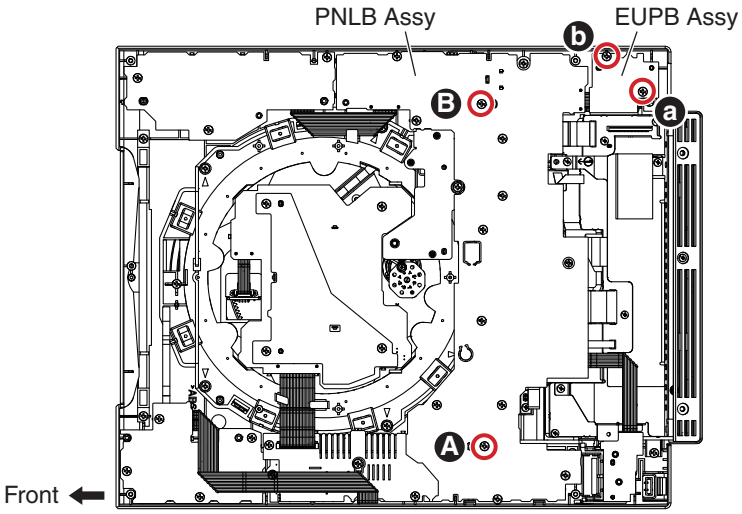

• Bottom view

[2] Display Section

(1) Remove the display section by removing the eight screws. (BPZ30P080FNI)

Screw tightening order

The other screws are random order.

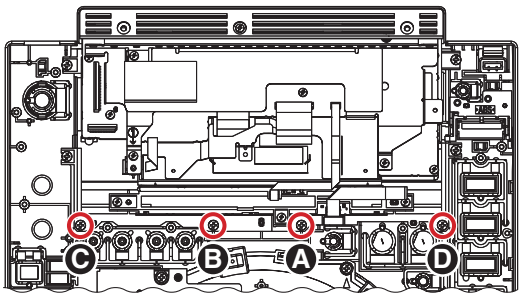

• Bottom view

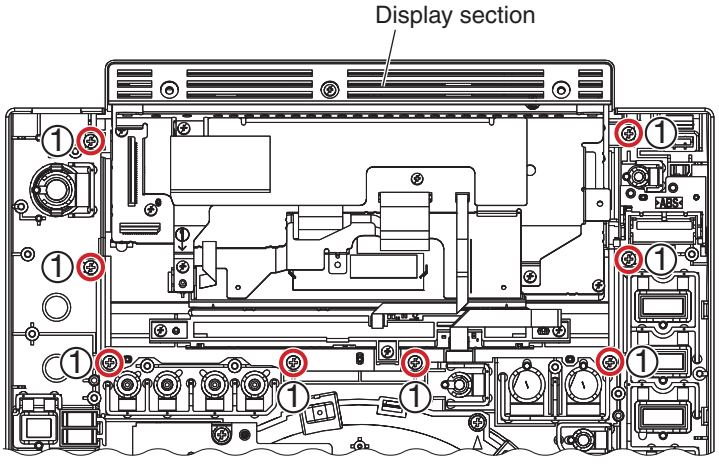

• Bottom view

Downloaded from www.Manualslib.com manuals search engine

Reference information

LCD bottom plate

When removing the rivets, be careful not to damage the finish around them.

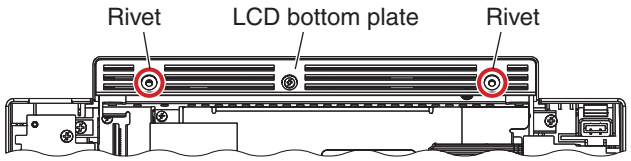

• Bottom view

Screw tightening order (Front lens)

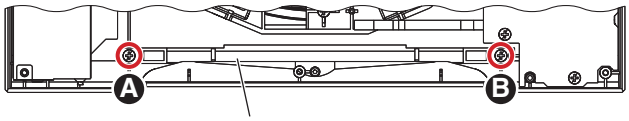

Front lens

• Bottom view

Screw tightening order (Bracket/LCD)

The other screws are random order.

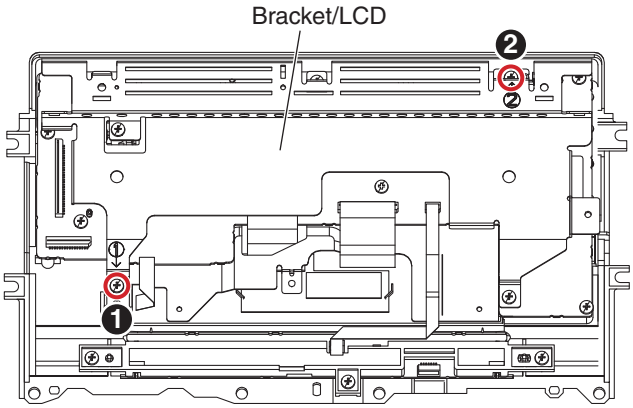

• Bottom view

Screw tightening order (CDC stay)

The other screws are random order.

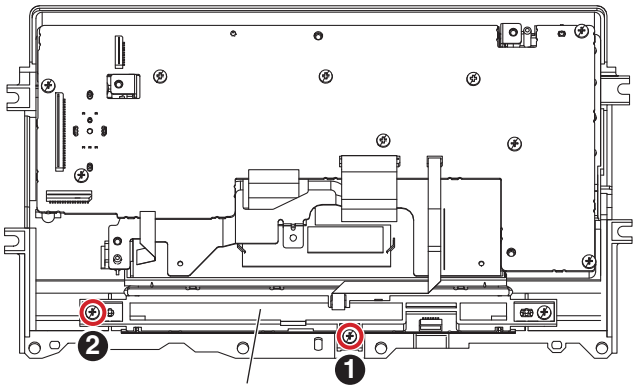

CDC stay

• Bottom view

Screw tightening order (TFTB Assy)

The other screws are random order.

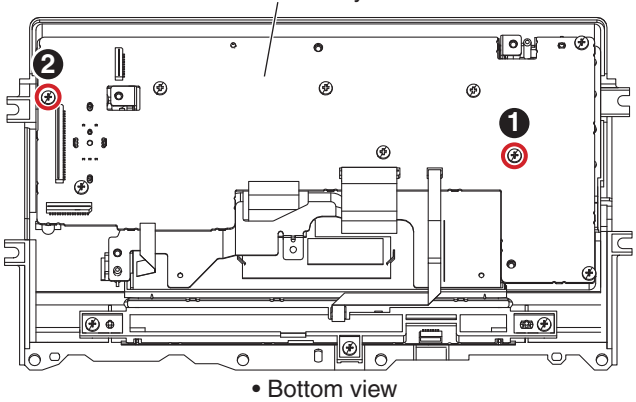

• Bottom view

Downloaded from www.Manualslib.com manuals search engine

8. EACH SETTING AND ADJUSTMENT

8.1 NECESSARY ITEMS TO BE NOTED

After repairing, be sure to check the version of the firmware, and if it is not the latest one, update to the latest version.
Perform the each item when the following parts are replaced.

• MAIN Assy	⇒ • Input Drive LD life before the replacing with a manual. (Service mode) • Confirmation of the version of the firmware • Updating to the latest version of the firmware
• TFTA Assy (Flash ROM: IC4004)	⇒ • Confirmation of the version of the firmware • Updating to the latest version of the firmware
• PLNB Assy (Panel Ucom: IC8003)	⇒ • Confirmation of the version of the firmware • Updating to the latest version of the firmware
• SRVB Assy (Flash ROM: IC7004)	⇒ • Confirmation of the version of the firmware • Updating to the latest version of the firmware
• Traverse Mechanism Assy	⇒ • Reset drive LD lighting time (Service mode)
• Tempo slider VR: VR8701	⇒ • TEMPO ZERO POINT ADJUSTMENT
• JOG dial section component	⇒ • JOG DIAL ROTATION LOAD ADJUSTMENT

8.2 FIRMWARE UPDATE / RECOVERY

For details on updating of firmware and recovery of the main unit, see [9] UPDATING OF FIRMWARE in “6.1 SERVICE MODE.”

Downloaded from www.Manualslib.com manuals search engine

8.3 JOG DIAL ROTATION LOAD ADJUSTMENT

JOG Check Mode : ON

• It is the mode which judges the load (light/-- heavy) numerically when rotating the JOG dial.

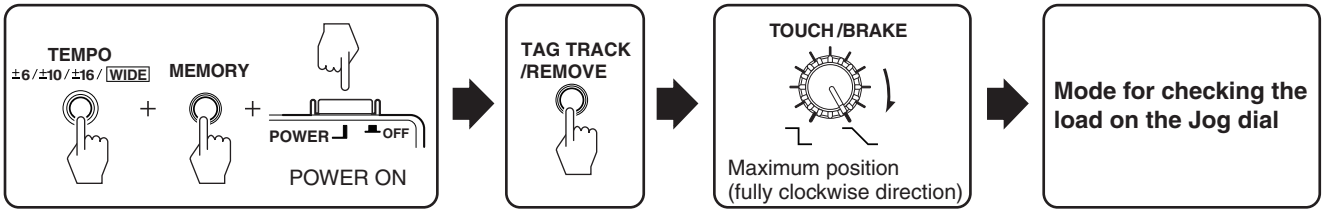

JOG Check Mode : CANCEL

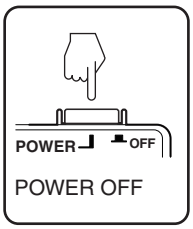

[Measuring method]

1. The adjustment value of adjust plate is adjusted to "0" (Refer to Fig. 2).
2. Enters the mode for checking the load on the Jog dial.
3. The jog dial is mightly rotated. Moreover, the direction of the rotation is clockwise.
4. The rotation speed and time are displayed in LCD display (Refer to Fig. 1).
   The time required so that the rotation may decrease from 3 X speed to 1.5 X speed when maximum speed is only 7 X speed or more is displayed.
   The average of the rotation decrease time of 5 times in all is confirmed in spec or less.
   Spec: 170 ± 20 msec.
5. When the rotation decreace time is coming off from spec, the adjustment value of adjust plate is changed, and it does from 2 of above-mentioned to 4.

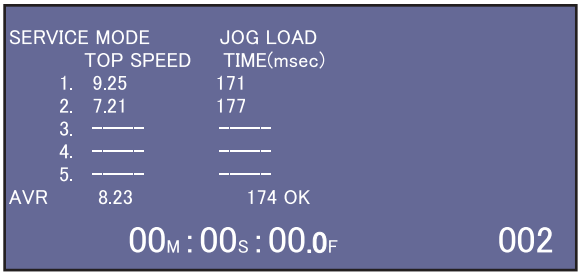

Fig. 1 Example of displaying LCD

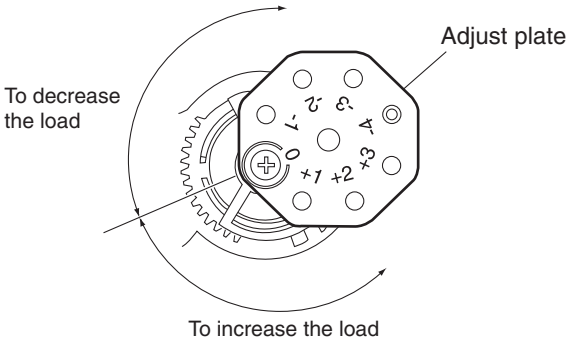

Fig. 2 Adjust plate

[Load adjustment method]

Remove the screw fixing the adjust plate, then screw it into the hole corresponding to the value (-1, -2, -3, -4, +1, +2 or +3) for a load to be added:
-1, -2, -3, -4 : To decrease the load
+1, +2, +3 : To increase the load

Downloaded from www.Manualslib.com manuals search engine

8.4 TEMPO ZERO POINT ADJUSTMENT

■ Necessary Adjustment Points

When	Adjustment points
Exchange the SLIDER VR	VR8702 (Zero Point ADJ.)

■ Adjustment and Check Points

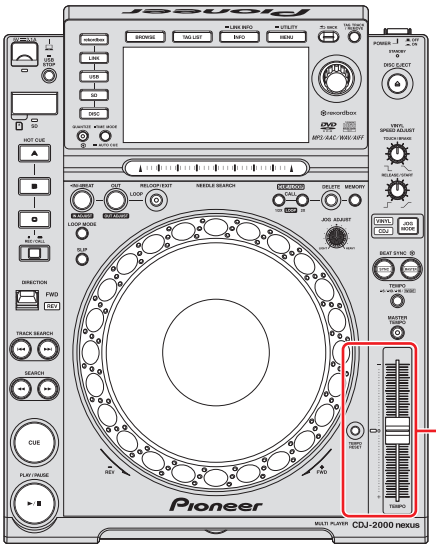

■ Jigs



• ⊖ Precise screwdriver (small)

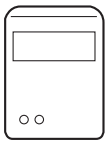

• Digital multimeter which can be measured to 0.1mV.

• Insulation sheet (The thing that is bigger than SLDB Assy)

Zero Point ADJ.

Notes:

Perform the adjustment before SLDB Assy mounting.
Repeat the adjustment until the voltage becomes 0 ± 5 mV.

① Insert the insulation sheet between SLDB Assy and the main unit.

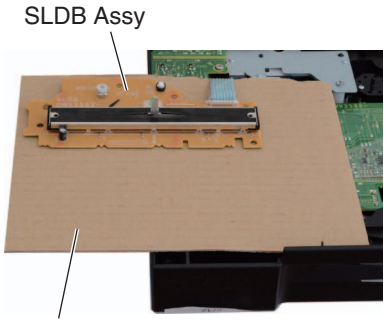

② Match the knob section of slide VR with CENTER POSITION.

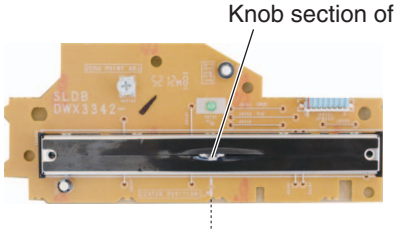

③ Adjust it so that turn VR8702, and the voltage of the digital multimeter becomes 0 ± 5 mV.

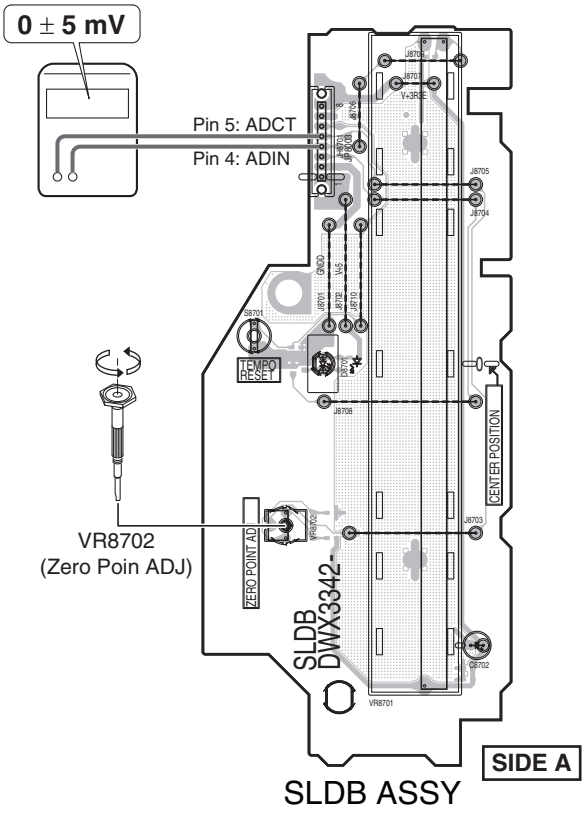

Downloaded from www.Manualslib.com manuals search engine

8.5 ITEMS FOR WHICH USER SETTINGS ARE AVAILABLE

The following data have been set in each IC.

Item for Which User's Setting is Available	Setting Value (The factory default settings are indicated in bold.)	Part No.	Ref No.	Assy	Content to be Stored
PLAY MODE	**CONTINUE**/SINGLE	DYW1814 (*NSP)	IC3	MAIN	UTILITY setting
EJECT/LOAD LOCK	LOCK/**UNLOCK**				
AUTO CUE LEVEL	-36dB/-42dB/48dB/-54dB/ **-60dB**/-66dB/-72dB/-78dB				
SLIP FLASHING	**ON**/OFF				
ON AIR DISPLAY	**ON**/OFF				
JOG BRIGHTNESS	OFF/1/**2**				
JOG INDICATOR	**ON**/OFF Substitution of SETUP_USER				
DISC SLOT ILLUMINATION	OFF/1/**2**				
LANGUAGE	Destination				
LIBRARY CREATOR	**LIBRARY**/FOLDER				
HISTORY NAME	"**HISTORY**"				
PLAYER No.	**AUTO**, 1-4				
MIDI CHANNEL	**1**-16				
DIGITAL OUT	16 bit/**24 bit**				
AUTO STANDBY	**ON**/OFF				
LCD BRIGHTNESS	1-**3**-5	DYW1815	IC4004	TFTA	
SCREEN SAVER	**ON**/OFF				
DUPLICATION	**DEFAULT**, ALL, PLAYER1-4				
TIME MODE	TIME/**REMAIN**	DYW1814 (*NSP)	IC3	MAIN	Statuses of keys
AUTO CUE	ON/**OFF**				
JOG MODE	**CDJ**/VINYL				

How to Back Up and Restore the Settings

You can store the UTILITY and other settings in the recording media (USB/SD) then retrieve the stored settings later.
How to store and retrieve data is described below.
(For details, refer to "Changing the Settings" in the operation instructions.)

Backup (Storing the Settings)

1. Load/plug an SD card or USB memory device in which the settings are to be stored into this unit.
2. Press the device (SD or USB) button.
3. Press the MENU/UTILITY button.
4. Using the rotary selector, select and enter SAVE at MY SETTINGS.

Restore (Retrieving the stored settings)

1. Load/plug an SD card or USB memory device in which the settings are stored into this unit.
2. Press the device (SD or USB) button.
3. Press the MENU/UTILITY button.
4. Using the rotary selector, select and enter LOAD at MY SETTINGS.

Downloaded from www.Manualslib.com manuals search engine

A

B

C

D

E

F

Downloaded from www.Manualslib.com manuals search engine

9. EXPLODED VIEWS AND PARTS LIST

NOTES:
- *Parts marked by "NSP" are generally unavailable because they are not in our Master Spare Parts List.*
- *The ⚠ mark found on some component parts indicates the importance of the safety factor of the part. Therefore, when replacing, be sure to use parts of identical designation.*
- *Screws adjacent to ▼ mark on product are used for disassembly.*
- *For the applying amount of lubricants or glue, follow the instructions in this manual. (In the case of no amount instructions, apply as you think it appropriate.)*

9.1 PACKING SECTION

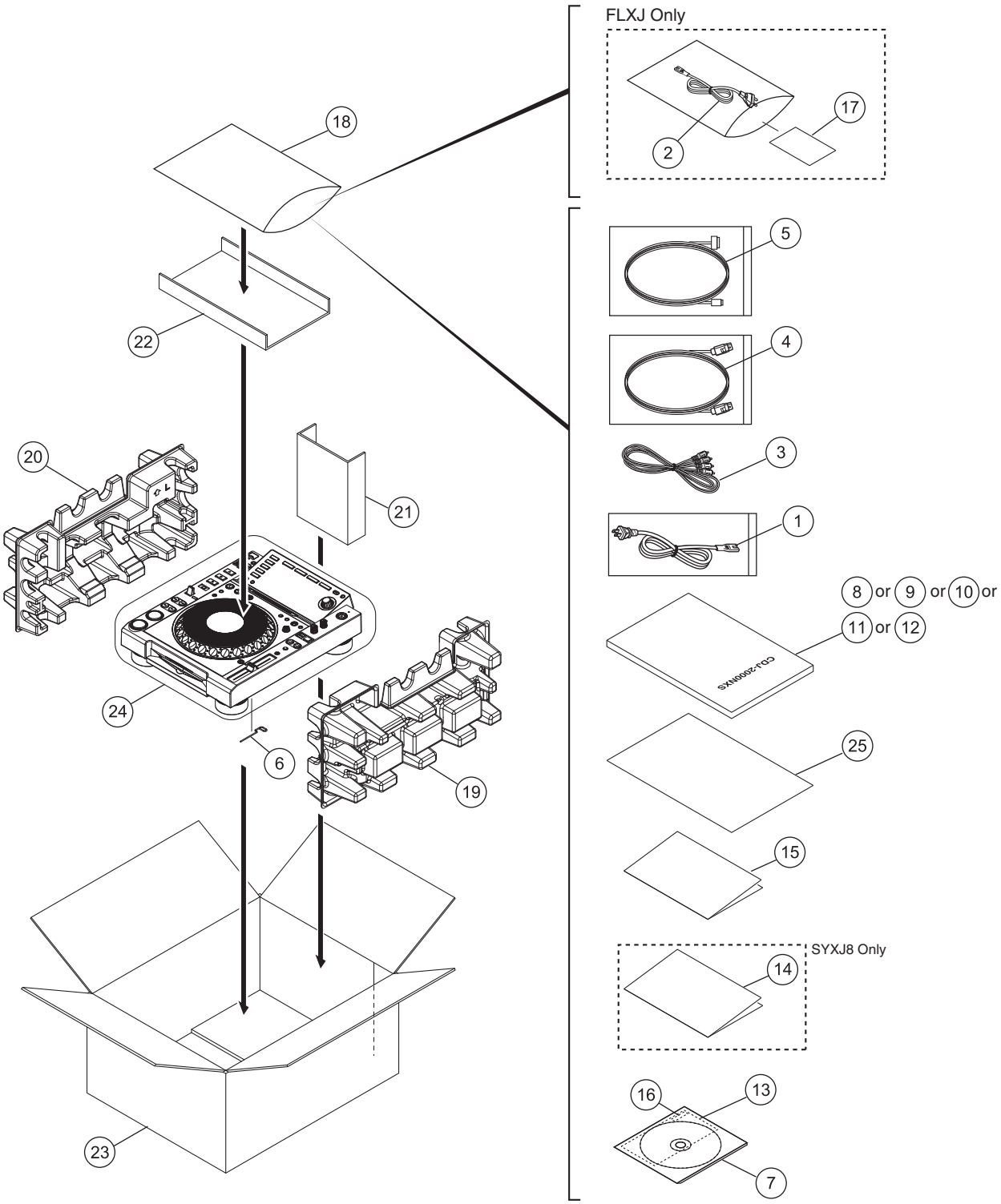

Downloaded from www.Manualslib.com manuals search engine

(1) PACKING SECTION PARTS LIST

Mark	No.	Description	Part No.
⚠	1	Power Cable	See Contrast table (2)
⚠	2	Power Cable	See Contrast table (2)
	3	Audio Cable (L = 1.5 m)	XDE3045
	4	LAN Cable	DDE1141
	5	Cable/iPod	DDE1142
	6	Disc Force Eject Pin	DEX1024
	7	CD-ROM Assy/2KN	DXX2693
	8	Sub Manual	See Contrast table (2)
	9	Sub Manual	See Contrast table (2)
	10	Sub Manual	See Contrast table (2)
	11	Sub Manual	See Contrast table (2)
	12	Sub Manual	See Contrast table (2)
NSP	13	License Key Label Assy	DXA2190
NSP	14	Warranty	See Contrast table (2)
NSP	15	Leaflet	See Contrast table (2)
NSP	16	Label/L K	DRW2484
	17	Caution Card SB	See Contrast table (2)
NSP	18	Polyethylene Bag	AHG7117
	19	Pad (R)	DHA1788
	20	Pad (L)	DHA1789
	21	Spacer	DHA1802
	22	Spacer	DHA1892
	23	Packing Case	See Contrast table (2)
	24	Packing Sheet	RHC1023
	25	Sub Manual/SNC	DRH1199

(2) CONTRAST TABLE

CDJ-2000NXS/UXJCB, SYXJ8, FLXJ, AXJ5 and KXJ5 are constructed the same except for the following:

Mark	No.	Symbol and Description	CDJ-2000NXS /UXJCB	CDJ-2000NXS /SYXJ8	CDJ-2000NXS /FLXJ	CDJ-2000NXS /AXJ5	CDJ-2000NXS /KXJ5
⚠	1	Power Cable	DDG1108	XDG3061	ADG7076	ADG7105	ADG7115
⚠	2	Power Cable	Not used	Not used	XDG3061	Not used	Not used
	8	Sub Manual (En)	DRH1158	Not used	Not used	Not used	Not used
	9	Sub Manual (En, Fr, De, It, Nl, Es, Pt, Ru)	Not used	DRH1159	Not used	Not used	Not used
	10	Sub Manual (En, Es, Zhtw)	Not used	Not used	DRH1160	Not used	Not used
	11	Sub Manual (ZHcn, En)	Not used	Not used	Not used	DRH1161	Not used
	12	Sub Manual (Ko)	Not used	Not used	Not used	Not used	DRH1162
NSP	14	Warranty	Not used	ARY7158	Not used	Not used	Not used
NSP	15	Leaflet	DRH1189	DRH1189	DRH1189	DRH1188	DRH1188
	17	Caution Card SB	Not used	Not used	ARM7064	Not used	Not used
	23	Packing Case	DHG3154	DHG3153	DHG3155	DHG3157	DHG3158

Downloaded from www.Manualslib.com manuals search engine

9.2 EXTERIOR SECTION

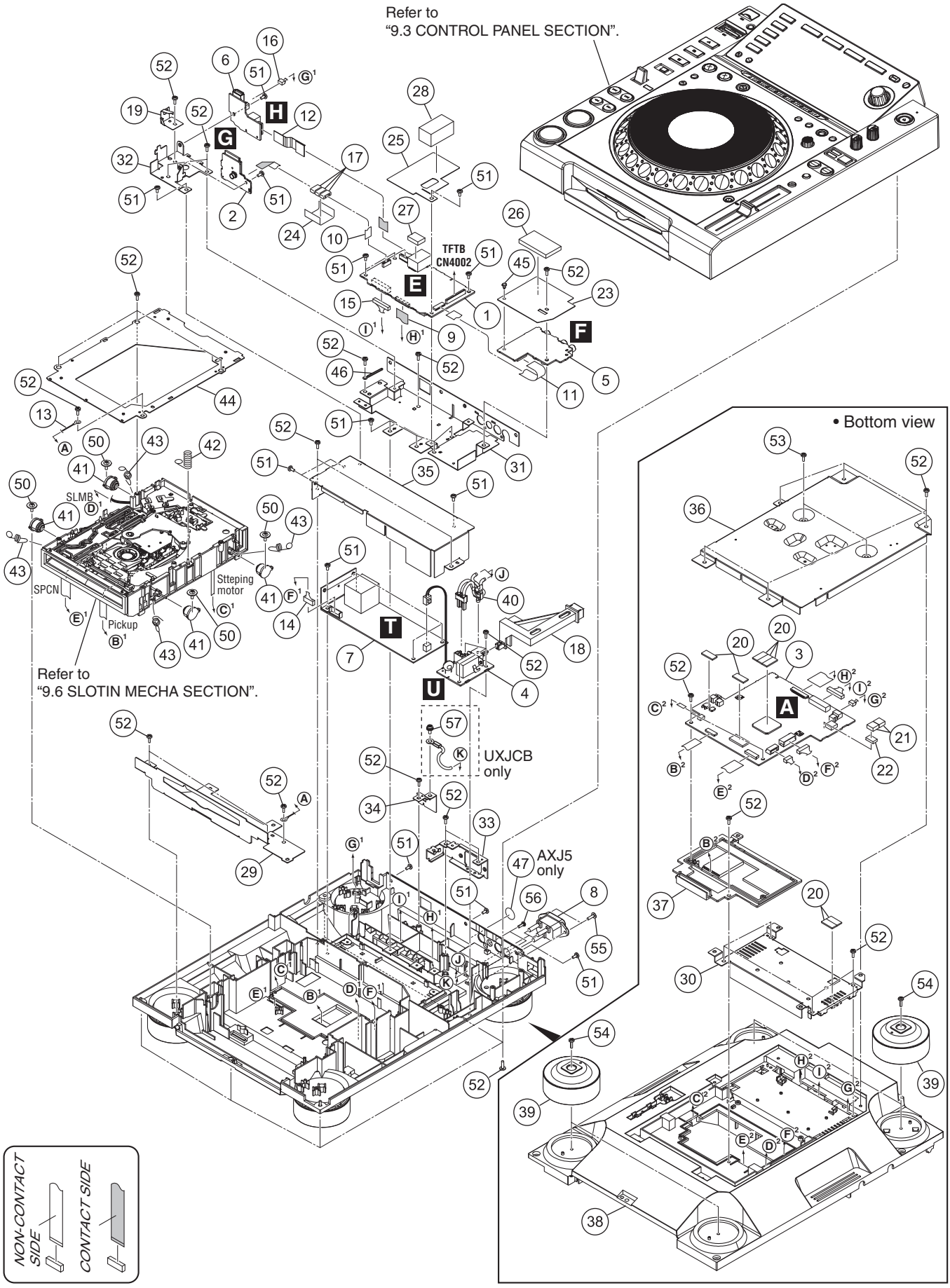

Downloaded from www.Manualslib.com manuals search engine

(1) EXTERIOR SECTION PARTS LIST

Mark	No.	Description	Part No.
	1	MAIN Assy	DWX3312
	2	SDCB Assy	DWX3333
	3	SRVB Assy	DWX3334
	4	ACIN Assy	DWX3346
	5	JACB Assy	DWX3350
	6	USBB Assy	DWX3395
⚠	7	POWER SUPPLY Assy	DWR1463
⚠	8	AC Inlet	See Contrast table (2)
	9	40P FFC	DDD1479
	10	10P FFC	DDD1480
	11	13P FFC	DDD1484
	12	FFC/13P	DDD1606
	13	Cord With Plug	DE007VE0
	14	Connector Assy	DKP3844
	15	Connector Assy 12P	DKP3845
	16	Crimp Connector/3P	DKP3939
	17	Ferrite Core	BTX1037
	18	Power Knob	DAC2484
	19	SD Earth Spring	DBK1357
NSP	20	Silicon Rubber D5 L	DEB1456
	21	Heat Cond Sheet	DEB2000
	22	Heat Cond Sheet	DEB2001
	23	Jack Cover	DEC3205
	24	Cushion (FC)	DEC3249
	25	Main Cover	DEC3258
	26	Cushion/FFC	DEC3430
	27	Cushion/LAN	DEC3431
	28	Cushion/PCB	DEC3455
	29	Front Plate	DNH2857
	30	SWPS Stay	DNH2890
	31	Stay/PCB	DNH3011
	32	Stay/USB	DNH3015
	33	Bracket/ACI	DNH3020
	34	Stay/KST	DNH3021
	35	Shield Case	DNH3022
	36	Plate	See Contrast table (2)
	37	Servo Cover	DNK5492
⚠	38	Chassis	See Contrast table (2)
	39	Insulator Assy	DXB2057
	40	Holder	VEC1355
	41	Damper	CNV7618
	42	Earth Spring	DBH1398
	43	Float Spring (G5)	DBH1494
	44	Mecha Plate	DNH2339
	45	Rivet (Plastic)	RBM-003
	46	Cord Clamper (Steel)	RNH-184
NSP	47	CCC S Label	See Contrast table (2)
	48	•••••	
	49	•••••	
	50	DM Screw (FTC)	DBA1260
	51	Screw	BBZ30P060FTB
	52	Screw	BPZ30P080FNI
	53	Screw	BPZ30P100FTB
	54	Screw	BPZ30P100FTC
	55	Screw	IBZ30P100FTB
	56	Screw	PPZ30P080FTB
	57	Screw	See Contrast table (2)

(2) CONTRAST TABLE

CDJ-2000NXS/UXJCB, SYXJ8, FLXJ, AXJ5 and KXJ5 are constructed the same except for the following:

Mark	No.	Symbol and Description	CDJ-2000NXS /UXJCB	CDJ-2000NXS /SYXJ8	CDJ-2000NXS /FLXJ	CDJ-2000NXS /AXJ5	CDJ-2000NXS /KXJ5
⚠	8	AC Inlet/3P	DKP3934	Not used	Not used	Not used	Not used
⚠	8	AC Inlet/2P	Not used	DKP3935	DKP3935	DKP3935	DKP3935
	36	Plate	DNH3026	DNH3019	DNH3026	DNH3019	DNH3019
⚠	38	Chassis	DNK6077	DNK6039	DNK6078	DNK6080	DNK6081
NSP	47	CCC S Label	Not used	Not used	Not used	DRW2310	Not used
	57	Screw	PMH40P080FTC	Not used	Not used	Not used	Not used

Downloaded from www.Manualslib.com manuals search engine

9.3 CONTROL PANEL SECTION

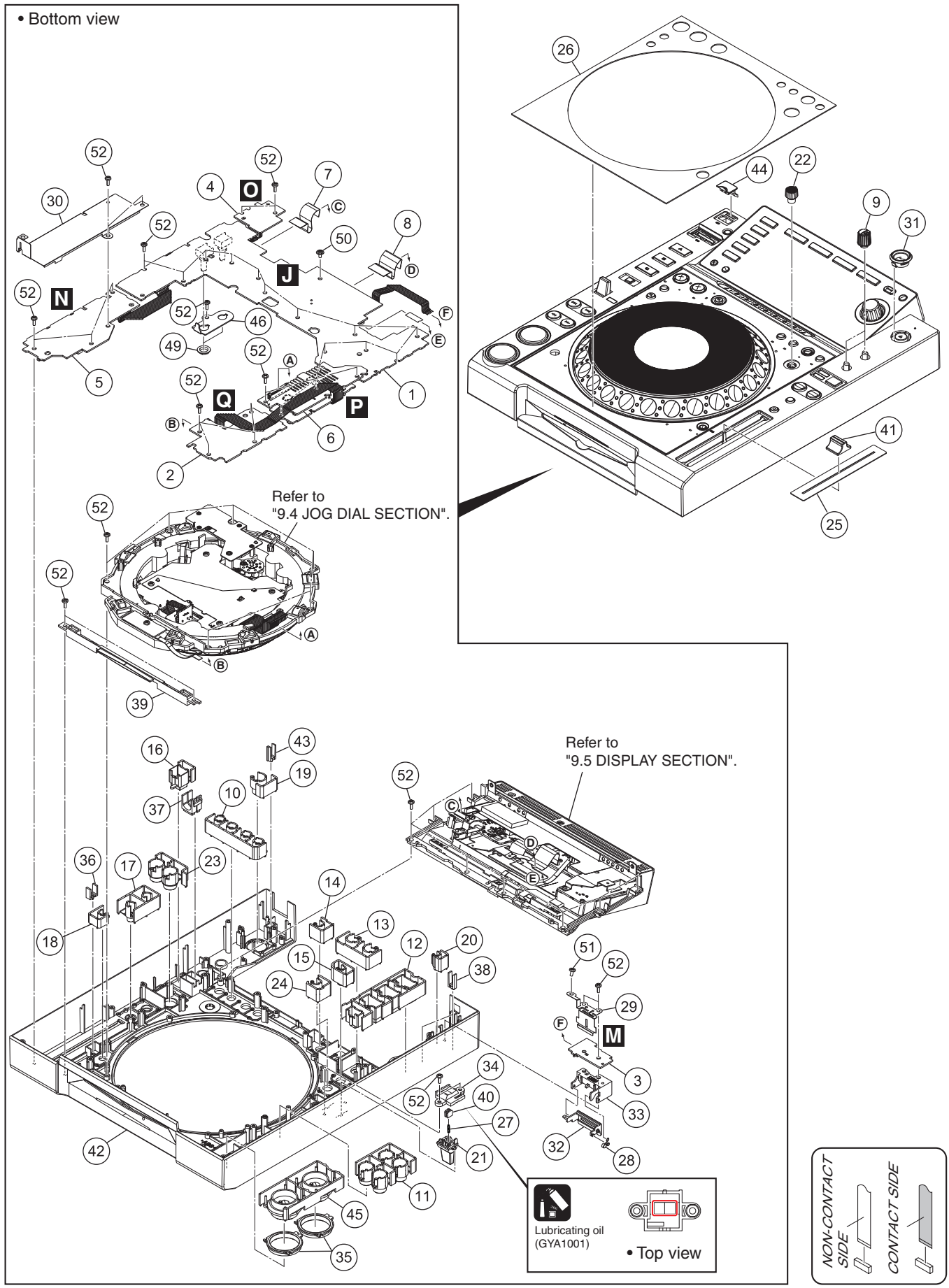

Downloaded from www.Manualslib.com manuals search engine

CONTROL PANEL SECTION PARTS LIST

Mark	No.	Description	Part No.
	1	PNLB Assy	DWX3338
	2	KSWB Assy	DWX3339
	3	SDSW Assy	DWX3340
	4	EUPB Assy	DWX3341
	5	SLDB Assy	DWX3342
NSP	6	CNCT Assy	DWX3343
	7	16P FFC	DDD1483
	8	FFC/22P	DDD1609
	9	Knob	DAA1303
	10	Button (CALL)	DAC2466
	11	Button (SERCH)	DAC2468
	12	Button (HOT CUE)	DAC2469
	13	Button (LOOP)	DAC2470
	14	Button (RELOOP)	DAC2471
	15	Button (4-BEAT LOOP)	DAC2472
	16	Button (JOG MODE)	DAC2473
	17	Button (TEMPO)	DAC2474
	18	Button (TEMPO REST)	DAC2475
	19	Button (EJECT)	DAC2476
	20	Button (USB STOP)	DAC2477
	21	Lever	DAC2478
	22	Adjust Knob Black	DAC2528
	23	Button/BSY	DAC2810
	24	Button/SLP	DAC2865
	25	Slide Sheet 1C	DAH2404
	26	Panel/TOP	DAH2871
	27	Lever Spring	DBH1702
	28	Spring	DBH1717
	29	Leaf Spring/SD	DBK1375
	30	Earth Plate	DNH2849
	31	Eject Guard	DNK3958
	32	SD Card Door	DNK5308
	33	SD Door Holder	DNK5309
	34	Lever Plate	DNK5312
	35	Ring Rens (PLAY)	DNK5315
	36	Tempo Lens	DNK5316
	37	Mode Lens	DNK5317
	38	Device Lens	DNK5318
	39	Front Lens	DNK5328
	40	Lever Cap	DNK5344
	41	Knob/SLD	DNK5981
⚠	42	Control Panel	DNK6030
	43	Lens/EUP	DNK6040
	44	Cover/USB	DNK6041
	45	Button Assy/PLY	DXB2126
	46	Stay/VR	DNF1894
	47	•••••	
	48	•••••	
	49	Flange Nut M9	DBN1008
	50	Screw	ABZ30P060FTC
	51	Screw	BBZ30P060FTB
	52	Screw	BPZ30P080FNI

Downloaded from www.Manualslib.com manuals search engine

9.4 JOG DIAL SECTION

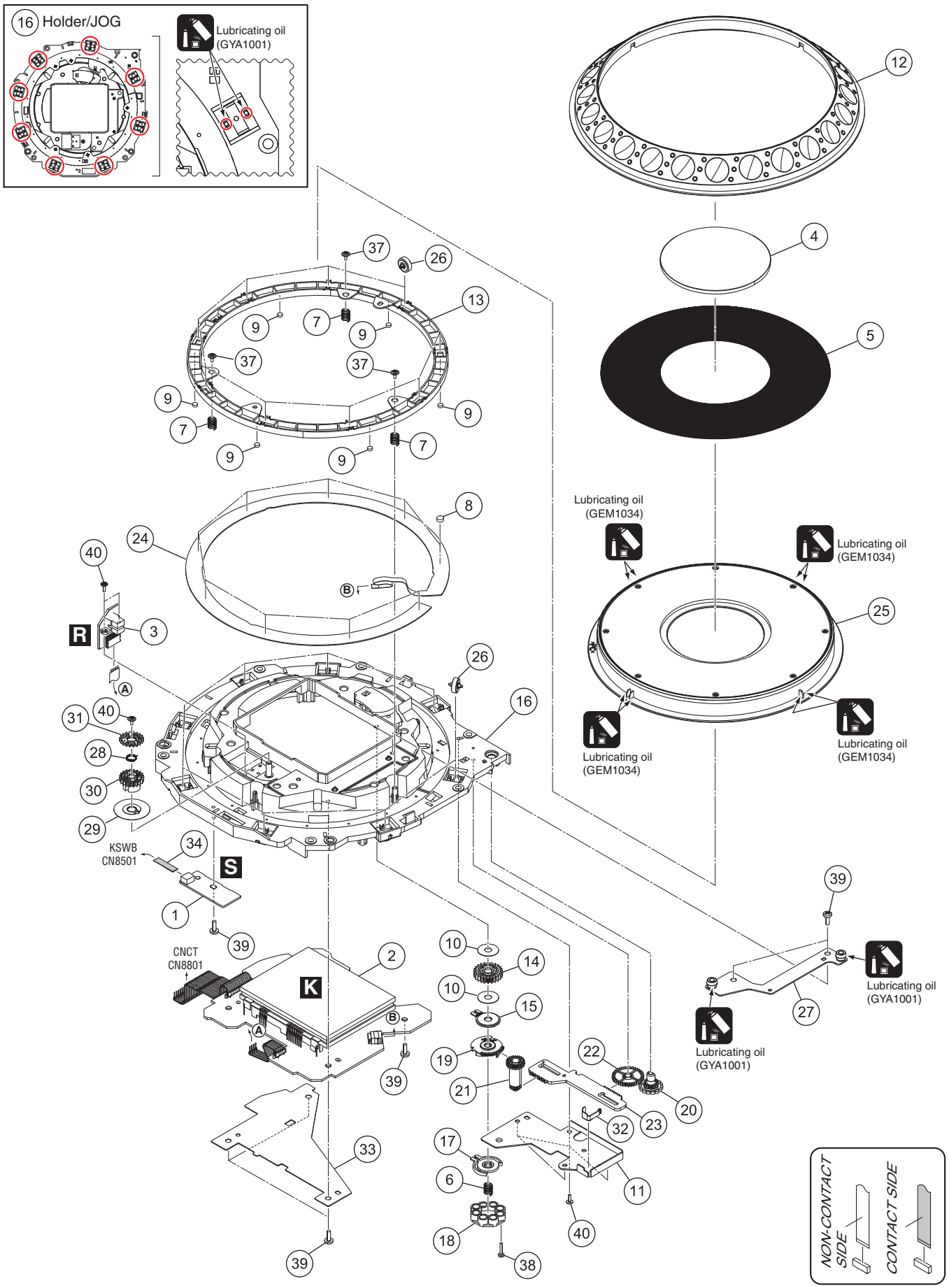

Downloaded from www.Manualslib.com manuals search engine

JOG DIAL SECTION PARTS LIST

Mark	No.	Description	Part No.
	1	INDB Assy	DWX3337
	2	JFLB Assy	DWX3348
	3	JOGB Assy	DWX3349
	4	JOG Panel	DAH2609
	5	Plate/JOG	DAH2907
	6	Coil Spring/LD	DBH1798
	7	SW Spring	DBH1681
	8	SW Cushion HH48/2	DEC2538
	9	Cushion/RNG	DEC3466
	10	Washer	DEC3137
	11	Link Plate	DNH2848
	12	JOG Dial/B	DNK6064
	13	SW Ring	DNK5233
	14	Gear/LD	DNK6145
	15	Smoother	DNK5237
	16	Holder/JOG	DNK6138
	17	Comp Plate	DNK5243
	18	Adjust Plate	DNK5300
	19	Cam Plate	DNK5301
	20	Dial Gear	DNK5302
	21	Link Gear A	DNK5303
	22	Link Gear B	DNK5304
	23	Rack Plate	DNK5305
	24	Sheet SW	DSX1078
	25	JOG Dial A Assy	DXA2159
	26	Roller Assy/A	DXB2118
	27	Stay Assy/JOG	DXB2133
	28	Encoder Spring	DBH1710
	29	Encorder Plate	DEC2889
	30	Gear/A	DNK6143
	31	Gear/B	DNK6144
	32	Leaf Spring/ADJ	DBK1376
	33	Barrier/JFL	DEC3419
	34	FFC/4P	DDD1608
	35	•••••	
	36	•••••	
	37	Screw (FE)	DBA1265
	38	Screw	BPZ20P100FTC
	39	Screw	BPZ30P080FNI
	40	Screw	IPZ20P060FTC

Downloaded from www.Manualslib.com manuals search engine

9.5 DISPLAY SECTION

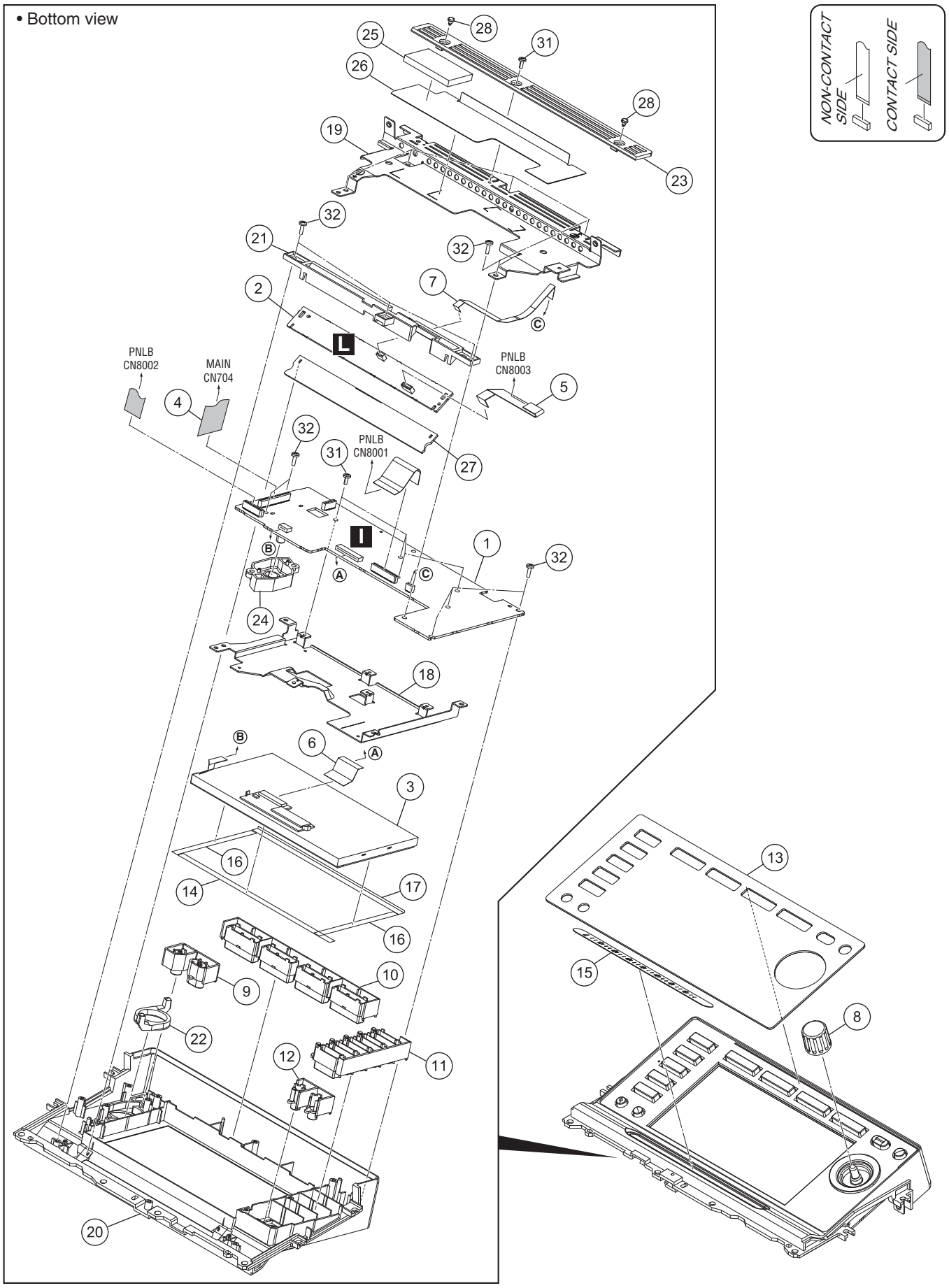

Downloaded from www.Manualslib.com manuals search engine

DISPLAY SECTION PARTS LIST

Mark	No.	Description	Part No.
	1	TFTB Assy	DWX3331
	2	CDCB Assy	DWX3332
	3	LCD Module	CWX3970
	4	29P FFC	DDD1481
	5	7P FFC	DDD1485
	6	40P FFC	DDD1541
	7	FFC/4P	DDD1607
	8	Dial Knob	DAA1246
	9	Button (MENU)	DAC2480
	10	Button/MOD	DAC2807
	11	Button/DEV	DAC2808
	12	Button/QUA	DAC2809
	13	Panel/DIS	DAH2874
	14	LCD Packing (Bottom)	DEC3184
	15	Sheet/CDC	DEC3395
	16	LCD Packing (Side)	DEC3192
	17	Packing/TOP	DEC3376
	18	Stay/LCD	DND1269
	19	Bracket/LCD	DND1270
⚠	20	Control Panel/LCD	DNK6037
	21	CDC Stay	DNK5320
	22	Ring Lens (BROWSE)	DNK5322
	23	LCD Bottom Plate	DNK5323
	24	Reflector	DNK5405
	25	Cushion/FFC	DEC3430
	26	Barrier/RB	DEC3421
	27	Lens/CDC	DNK6017
	28	Rivet (Plastic)	RBM-003
	29	•••••	
	30	•••••	
	31	Screw	BBZ26P060FTB
	32	Screw	BPZ26P080FTC

Downloaded from www.Manualslib.com manuals search engine

9.6 SLOT IN MECHA SECTION

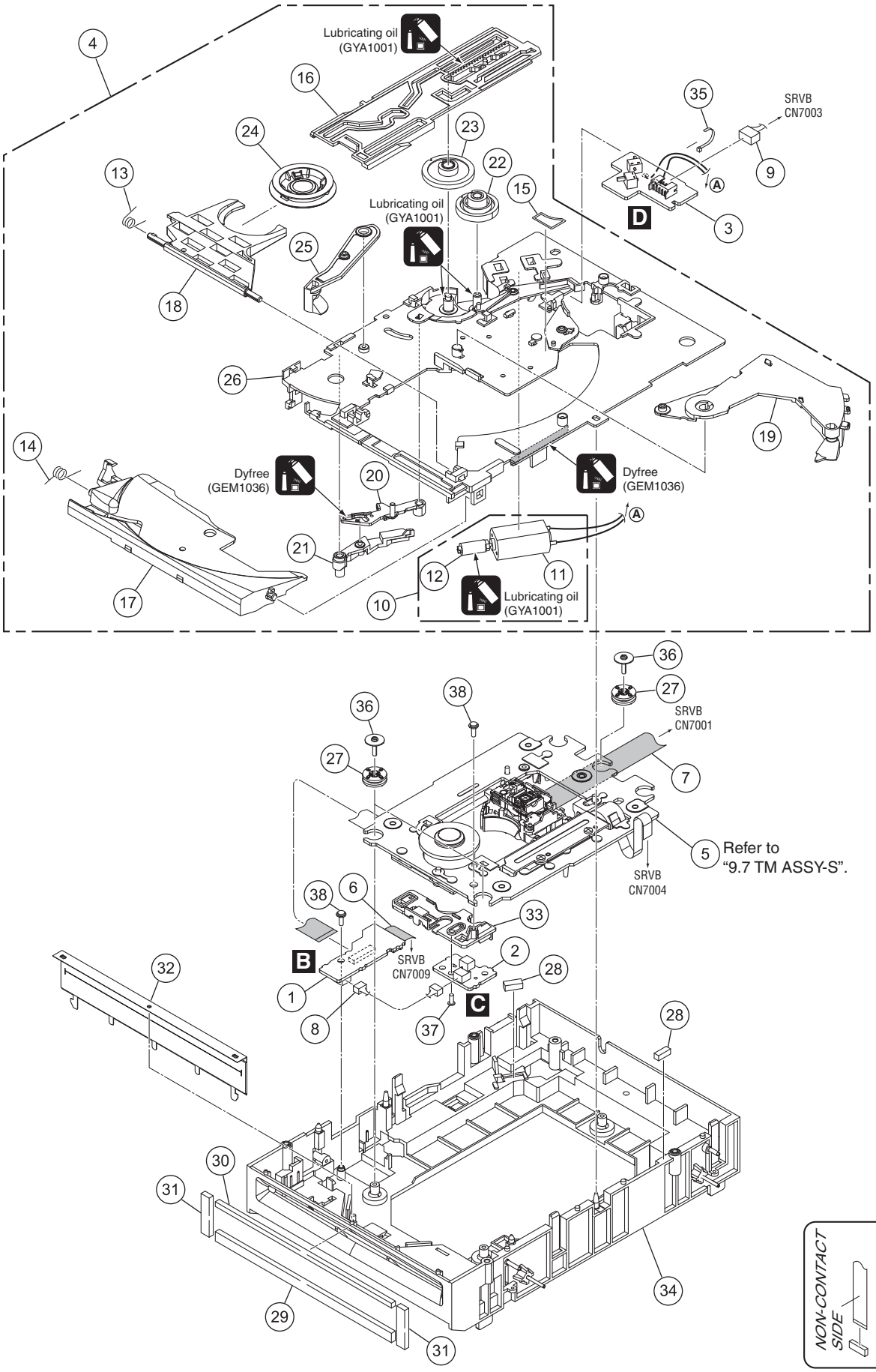

Downloaded from www.Manualslib.com manuals search engine

SLOT IN MECHA SECTION PARTS LIST

Mark	No.	Description	Part No.
	1	SPCN Assy	DWX3336
	2	INSW Assy	DWX3335
	3	SLMB Assy	DWX3345
NSP	4	SLOTIN MECHA G11 Assy	DXA2163
	5	TM Assy 09SD -S	DXX2697
	6	13P FFC	DDD1452
	7	24P FFC	DDD1460
	8	Connector Assy 2P	DKP3769
	9	Connector Assy	PF05PP-C25
	10	DC Motor Assy-S	DXX2510
NSP	11	DC Motor S	DXM1230
NSP	12	Worm Gear	DNK3910
	13	Clamp Spring	DBH1374
	14	Guide Spring	DBH1375
	15	SW. Lever Spacer (PET)	DEC2420
	16	Main Cam	DNK3407
	17	Disc Guide	DNK3478
	18	Clamp Arm	DNK3576
	19	Eject Lever	DNK3684
	20	Lever AP	DNK3835
	21	Lever BP	DNK3836
	22	Loading Gear	DNK3911
	23	Drive Gear	DNK3912
	24	Clamper Assy	DXA2043
	25	Loading Lever Assy	DXB1880
	26	Loading Base Assy-S	DEA1022
	27	Float Rubber D3	DEB1404
	28	Spacer POR (T3)	DEB1566
	29	Vessel Cushion A	DEC2852
	30	Vessel Cushion B	DEC2853
	31	Vessel Cushion C	DEC2854
	32	Front Sheet	DED1132
	33	Inside SW Base	DNK4236
	34	Float Base G11 Assy	DXB1793
	35	Binder	ZCA-SKB90BK
	36	Float Fastener	DBA1286
	37	Screw	VBA1062
	38	Screw	IPZ20P060FTC

Downloaded from www.Manualslib.com manuals search engine

9.7 TM ASSY-S

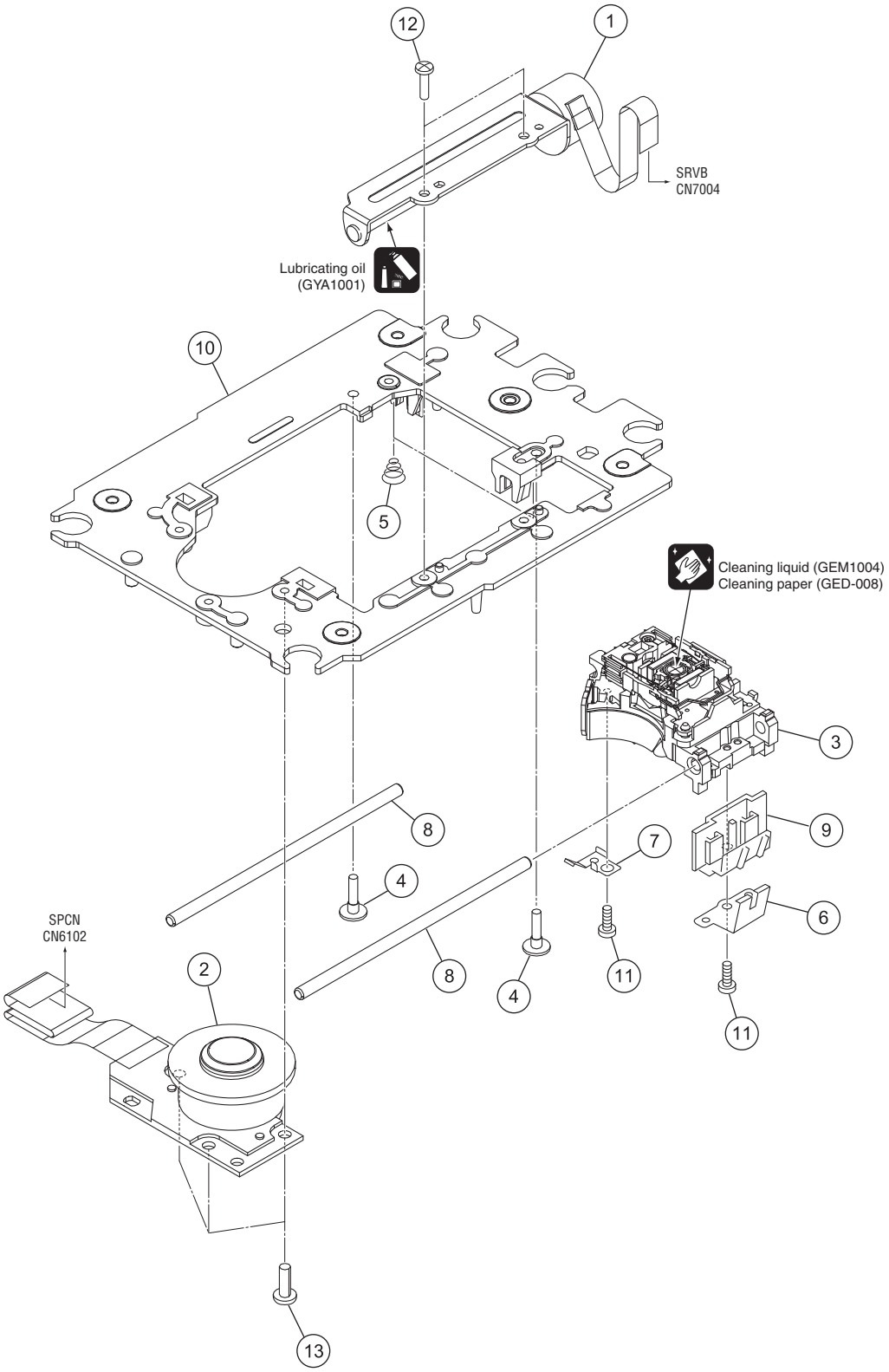

Downloaded from www.Manualslib.com manuals search engine

TM ASSY-S SECTION PARTS LIST

Mark	No.	Description	Part No.
NSP	1	Stepping Motor SK	DXM1227
NSP	2	Spindle Motor G11(N)	DXM1231
NSP	3	09SD Pickup Assy	OWY8177
NSP	4	Adjust Screw	DBA1263
NSP	5	Skew Spring	DBH1437
NSP	6	Joint Spring (J)	DBK1261
NSP	7	Slider Spring G11 (J)	DBK1262
NSP	8	Guide Shaft (S)	DLA1918
	9	Joint	DNK3858
NSP	10	Mounting Plate G11(J)	DNK4307
	11	Tapping Screw 04	VBA1092
	12	Screw	BPZ20P080FTC
	13	Screw	BPZ26P080FTC

Downloaded from www.Manualslib.com manuals search engine

10. SCHEMATIC DIAGRAM

10.1 SRVB ASSY (1/2)

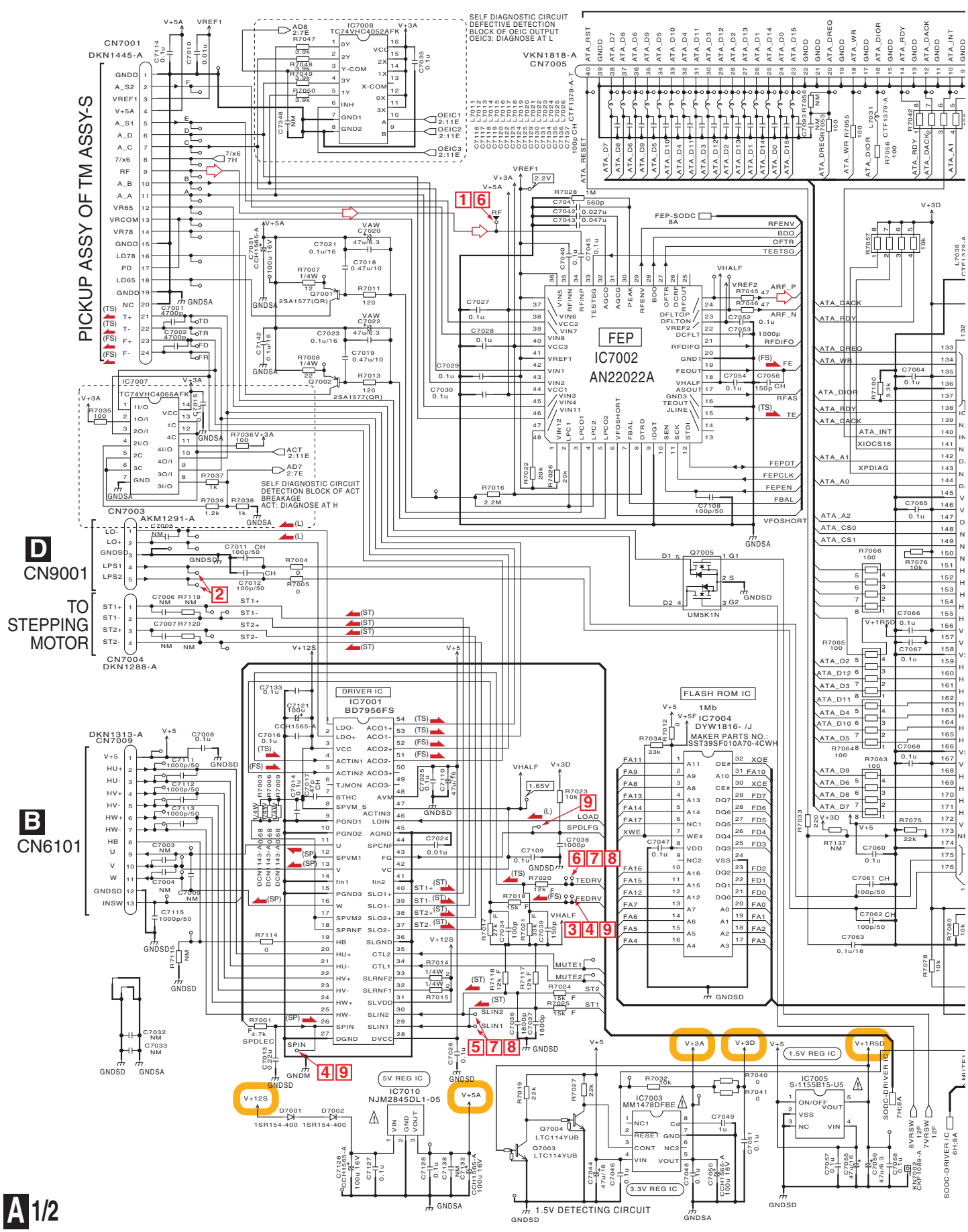

Downloaded from www.Manualslib.com manuals search engine

A 1/2 SRVB ASSY (DWX3334)

Servo Block

E 5/5 CN701

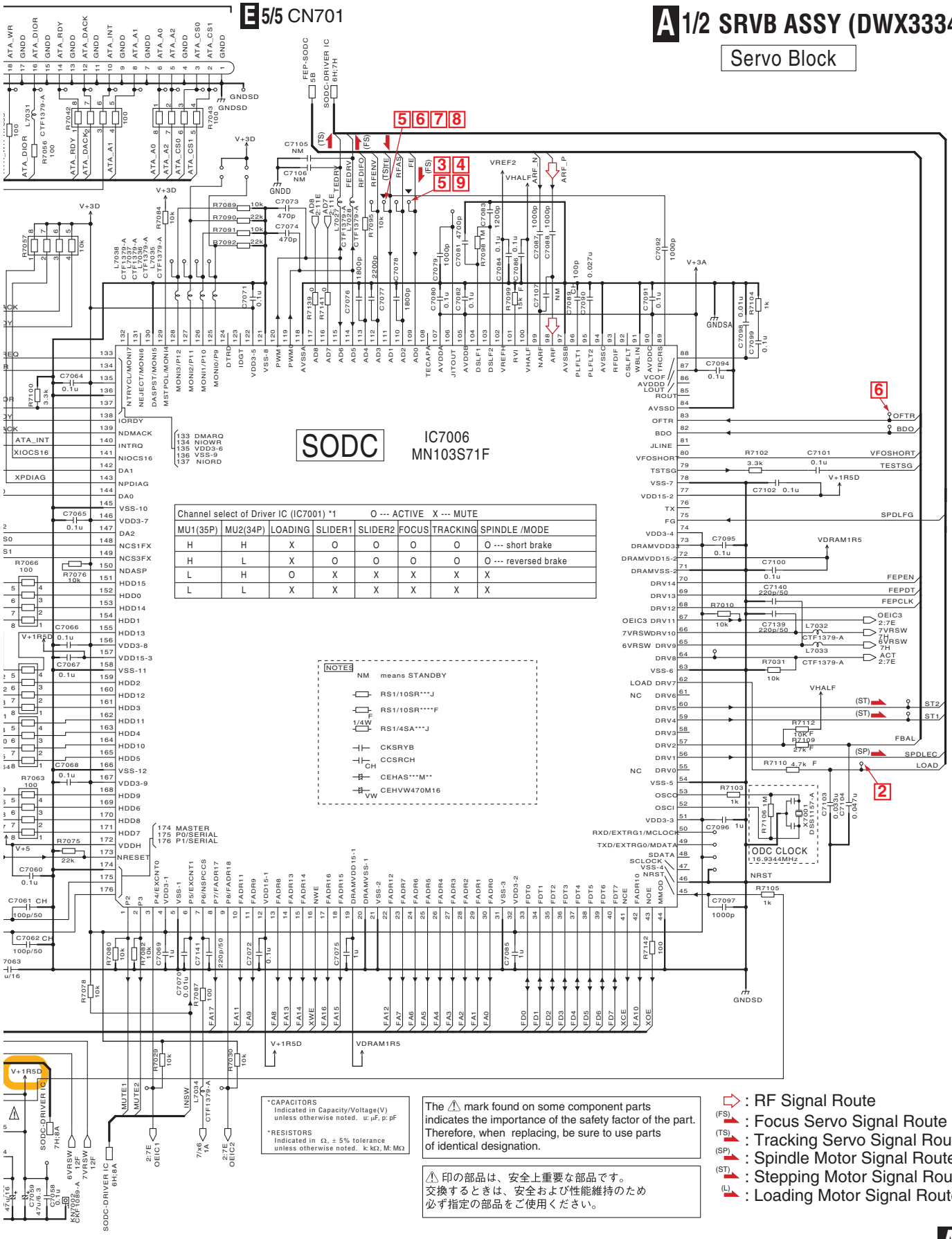

Downloaded from www.Manualslib.com manuals search engine

10.2 SRVB ASSY (2/2), SPCN, INSW and SLMB ASSYS

A 2/2 SRVB ASSY (DWX3334)

Power Block

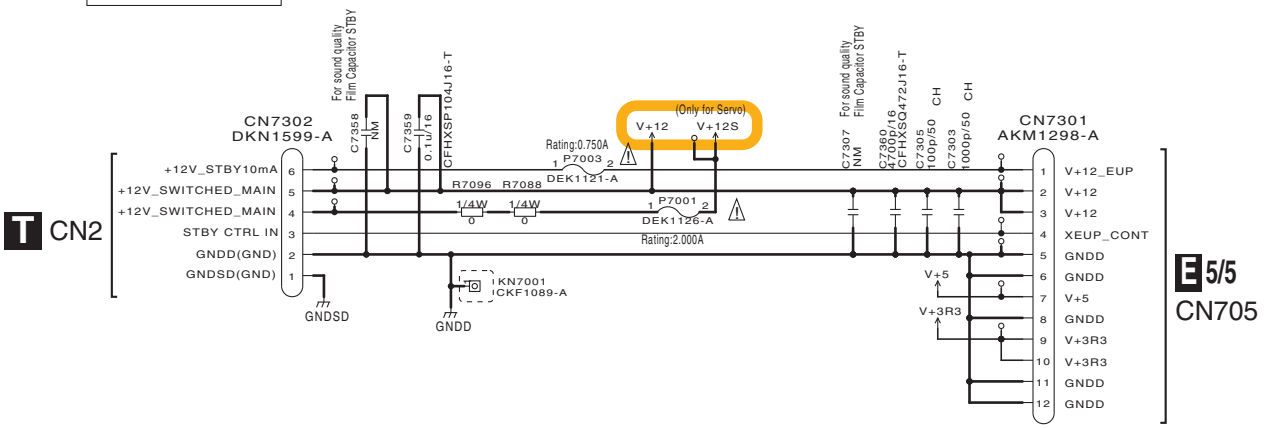

5V DCDC expecting for USB-A

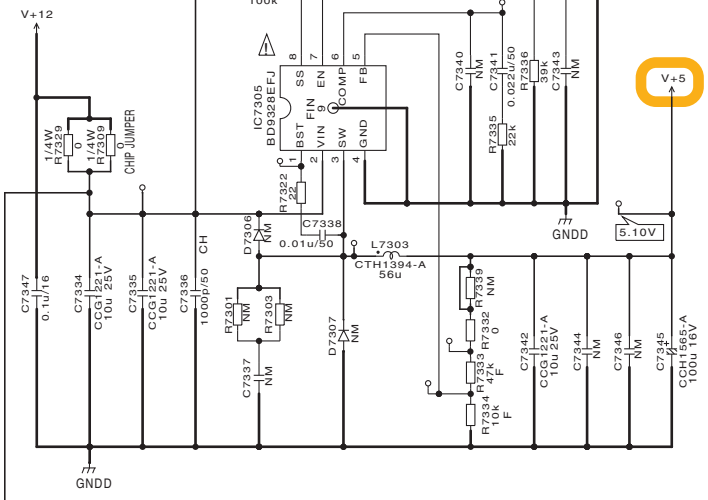

3.3V DCDC

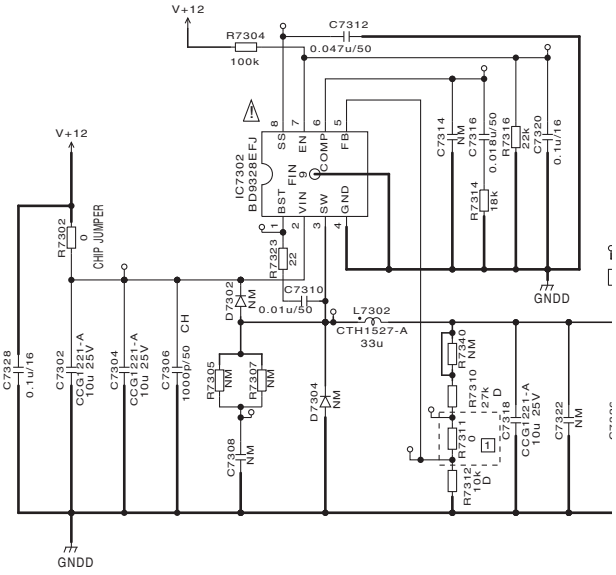

5V DCDC for USB-A

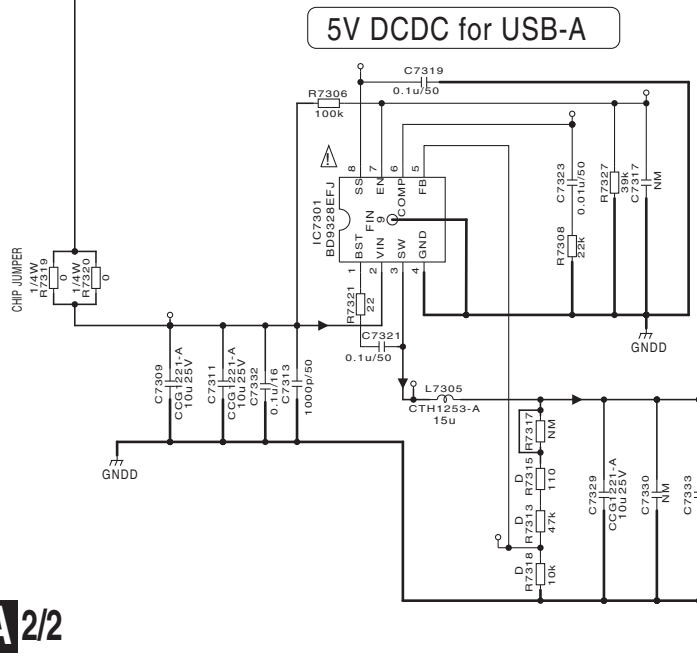

NOTES

NM	means STANDBY
	RS1/10SR***J
F	RS1/10SR****F
D	RS1/10SR****D
1/4W	RS1/4SA***J
	CKSRYB
CH	CCSRCH

*CAPACITORS
Indicated in Capacity/Voltage(V) unless otherwise noted. u: μF, p: pF

*RESISTORS
Indicated in Ω, ± 5% tolerance unless otherwise noted. k: kΩ, M: MΩ

The ⚠ mark found on some component parts indicates the importance of the safety factor of the part. Therefore, when replacing, be sure to use parts of identical designation.

⚠ 印の部品は、安全上重要な部品です。
交換するときは、安全および性能維持のため
必ず指定の部品をご使用ください。

CAUTION- FOR COTINUED PROTECTION AGAINST RISK OF FIRE. REPLACE WITH SAME TYPE No. 0437002. AND No. 0437.750 AND No. 04371.25 MFD. BY LITTELFUSE INC. FOR P7001 AND P7003 AND P7302

A 2/2

Downloaded from www.Manualslib.com manuals search engine

B SPCN ASSY (DWX3336)

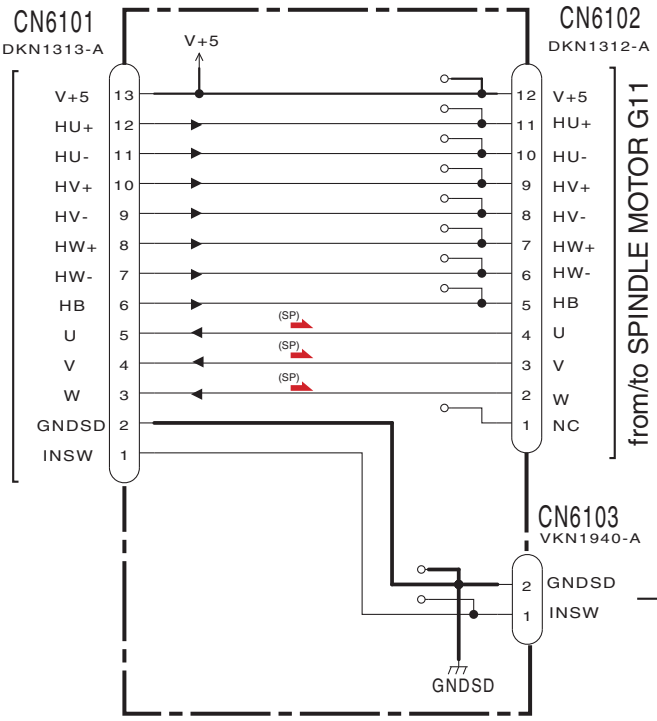

C INSW ASSY (DWX3335)

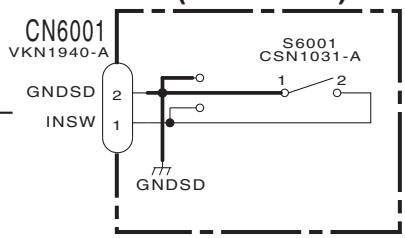

A 1/2
CN7009

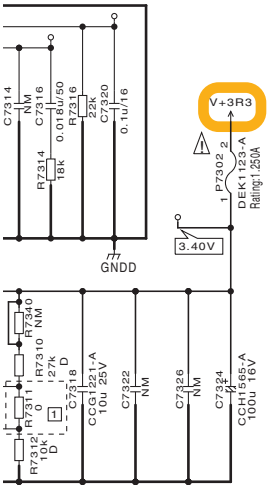

D SLMB ASSY (DWX3345)

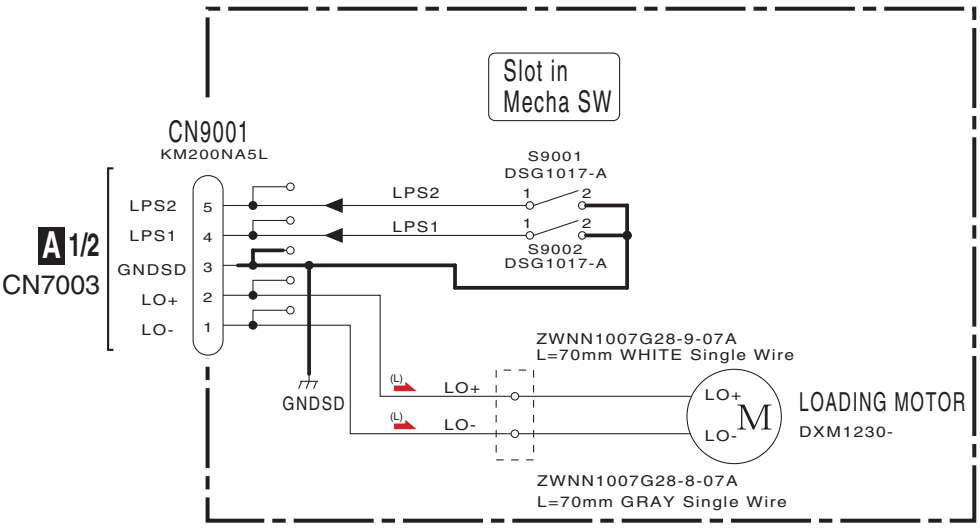

A 1/2
CN7003

onent parts
fety factor of the part.
e to use parts

です。
維持のため
。

AGAINST
H SAME TYPE
0 AND
FUSE INC.
7302

(SP) : Spindle Motor Signal Route
(L) : Loading Motor Signal Route

A 2/2 B C D

Downloaded from www.Manualslib.com manuals search engine

10.3 MAIN ASSY (1/5)

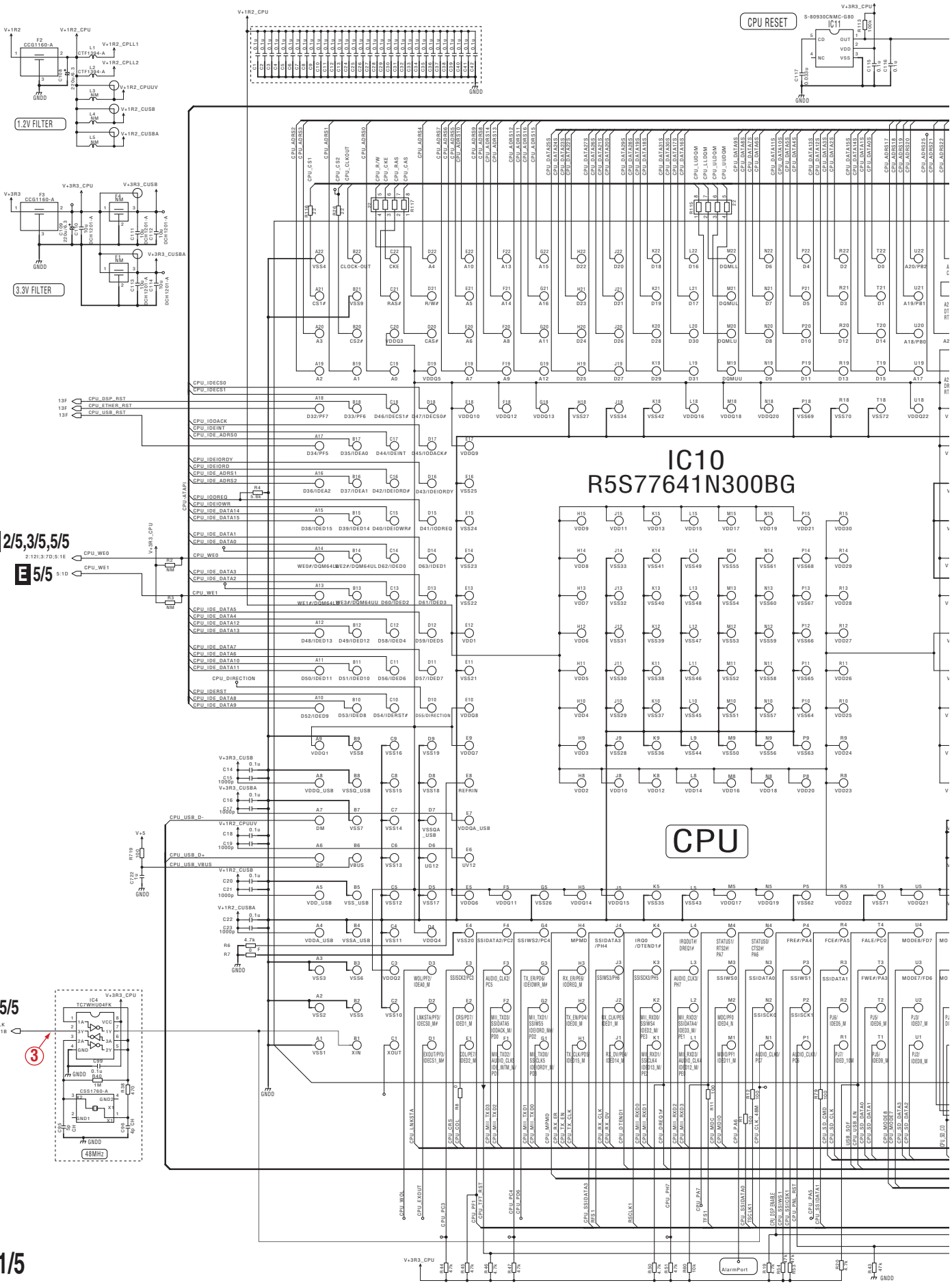

Downloaded from www.Manualslib.com manuals search engine

E 1/5 MAIN ASSY (DWX3312)

CPU Block

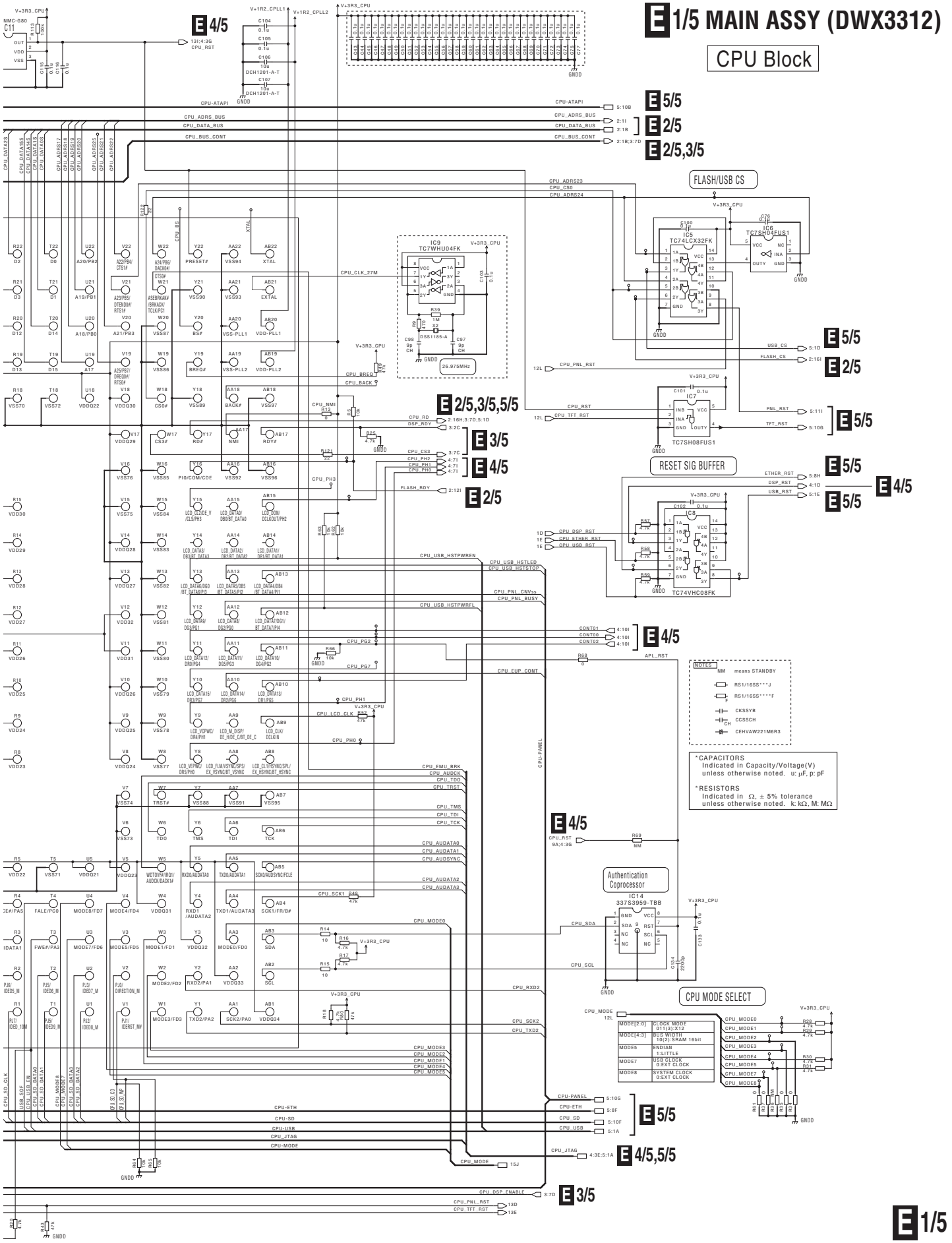

Downloaded from www.Manualslib.com manuals search engine

10.4 MAIN ASSY (2/5)

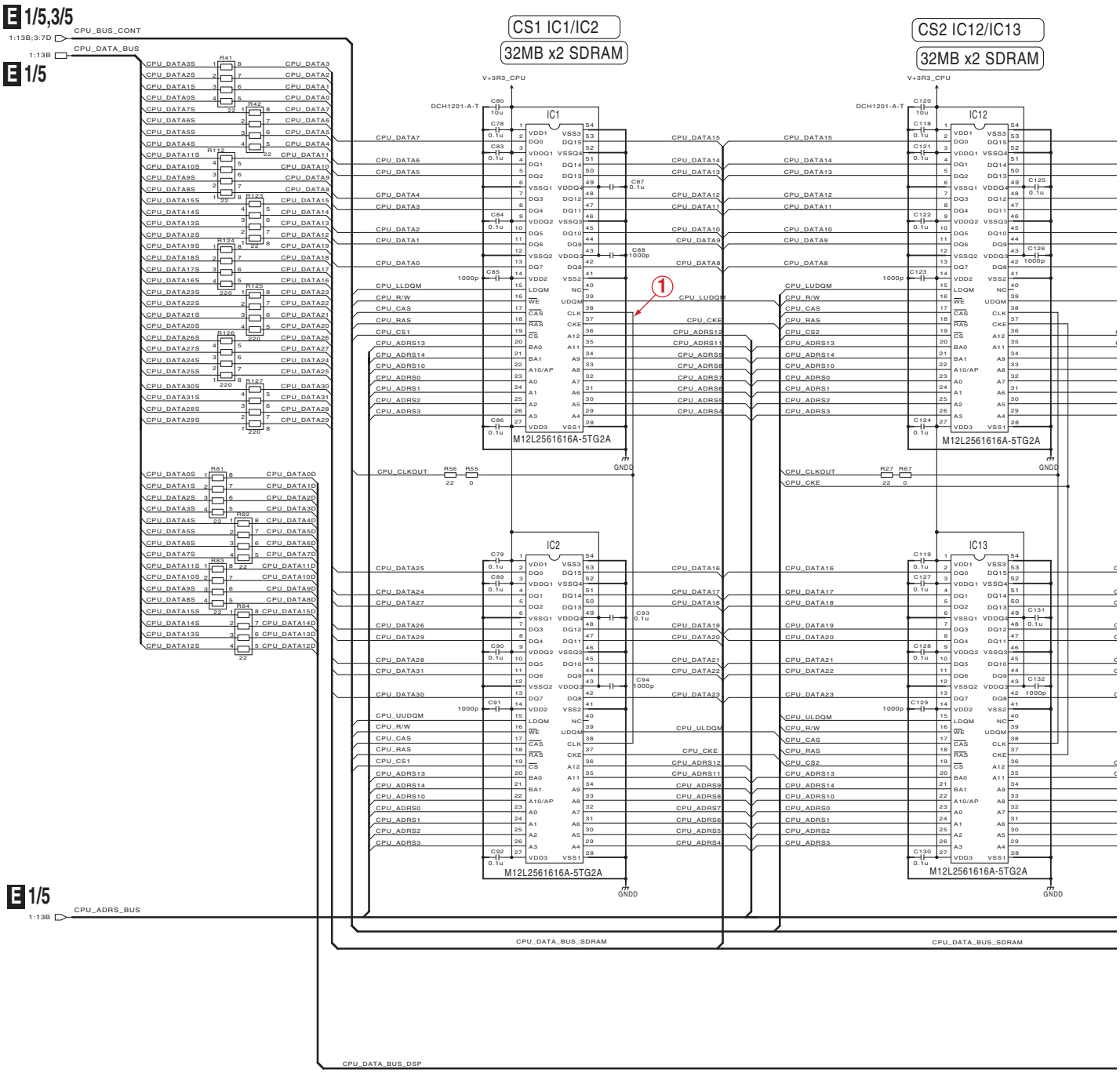

Downloaded from www.Manualslib.com manuals search engine

E 2/5 MAIN ASSY (DWX3312)

MEMORY Block

2/IC13

SDRAM

12

13

1616A-5TG2A

16A-5TG2A

DYW1814- /J

4MB FLASH ROM

IC3

MX29LV320ETTI-70G

V+3R3_CPU

GNDD

BUS_SDRAM

E 1/5,3/5,5,5

E 1/5

E 1/5,3/5,5/5

E 3/5,5/5

E 5/5

E 3/5

E 2/5

CPU_WE0

FLASH_RDY

CPU_RD

FLASH_CS

CPU_ADRS_BUS_R

CPU_DATA_BUS_R

CPU_DATA_BUS_DSP

NOTES

NM means STANDBY

RS1/16SS***J

RS1/16SS****F

CKSSYB

CCSSCH

CEHVAW221M6R3

*CAPACITORS
Indicated in Capacity/Voltage(V)
unless otherwise noted. u: µF, p: pF

*RESISTORS
Indicated in Ω, ± 5% tolerance
unless otherwise noted. k: kΩ, M: MΩ

Downloaded from www.Manualslib.com manuals search engine

10.5 MAIN ASSY (3/5)

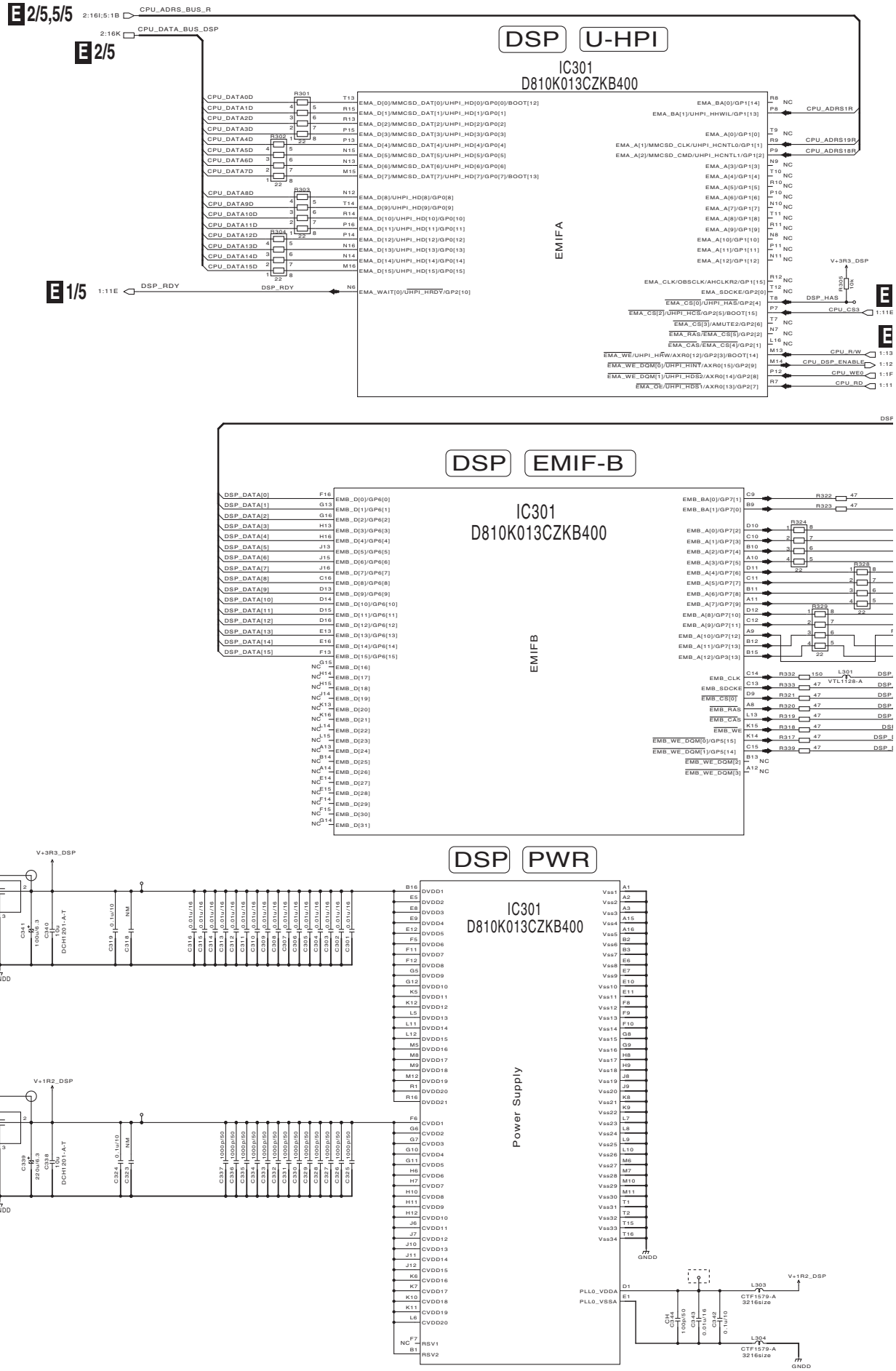

Downloaded from www.Manualslib.com manuals search engine

E 3/5 MAIN ASSY (DWX3312)

DSP Block

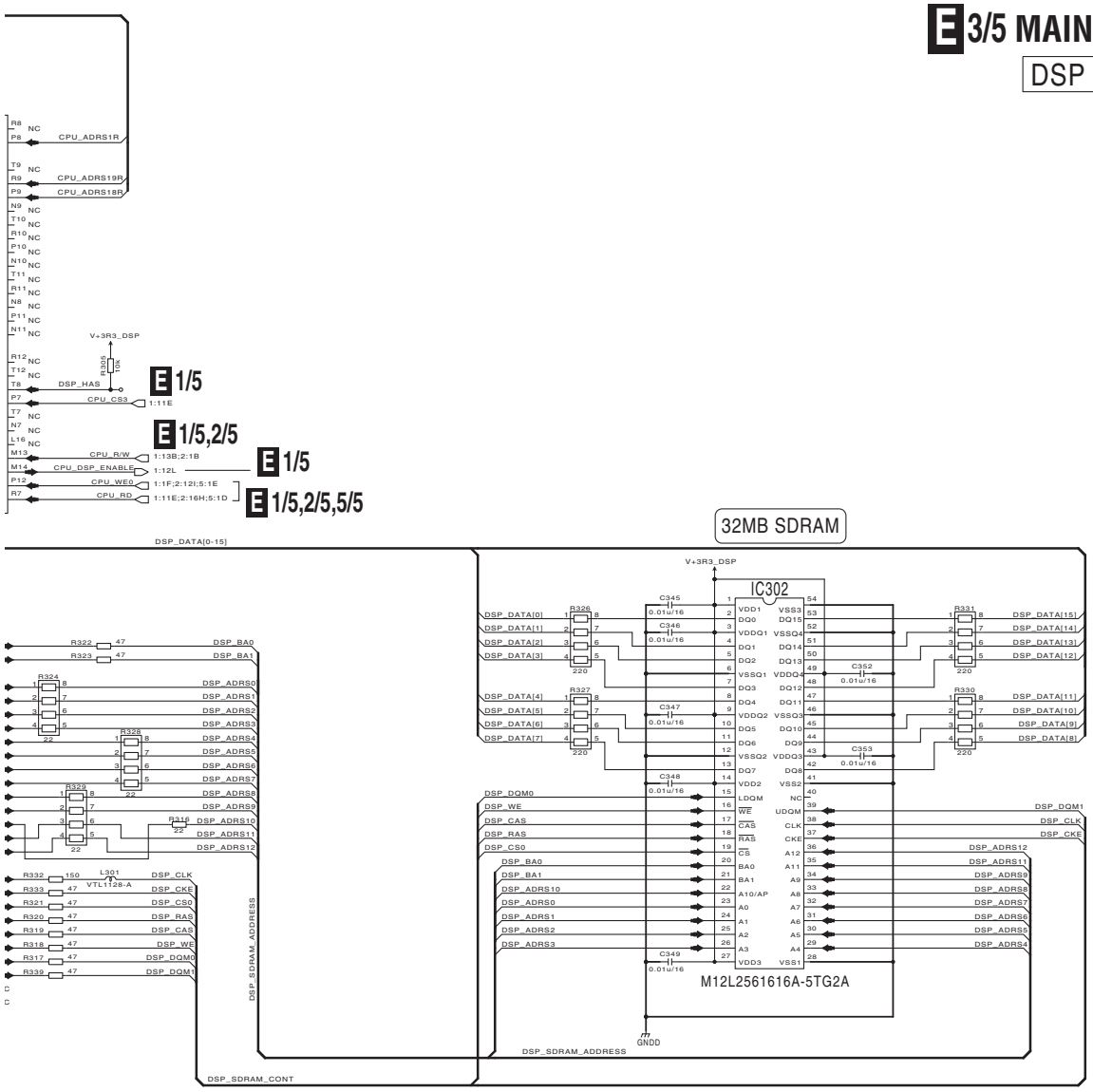

*CAPACITORS
Indicated in Capacity/Voltage(V)
unless otherwise noted. u: µF, p: pF

*RESISTORS
Indicated in Ω, ± 5% tolerance
unless otherwise noted. k: kΩ, M: MΩ

NOTES
NM means STANDBY
RS1/16SS***J
RN1/16SE****D
RS1/16SS****D
RAB4CQ***J
CKSSYB
CCSSCJ
CFHXSQ
CEHVAW

V+1R2_DSP
GNDD

Downloaded from www.Manualslib.com manuals search engine

10.6 MAIN ASSY (4/5)

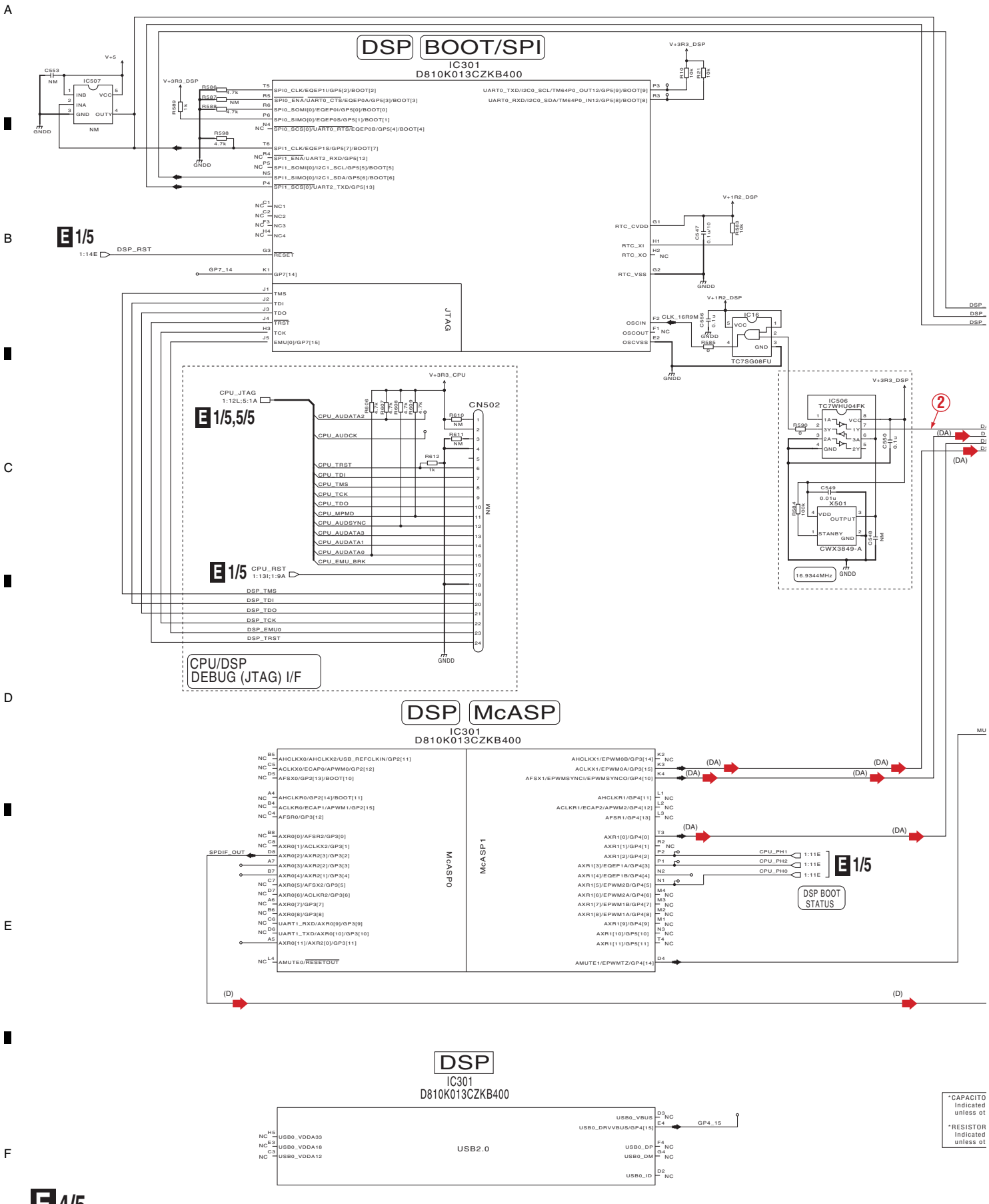

Downloaded from www.Manualslib.com manuals search engine

DSP Block
AUDIO Block

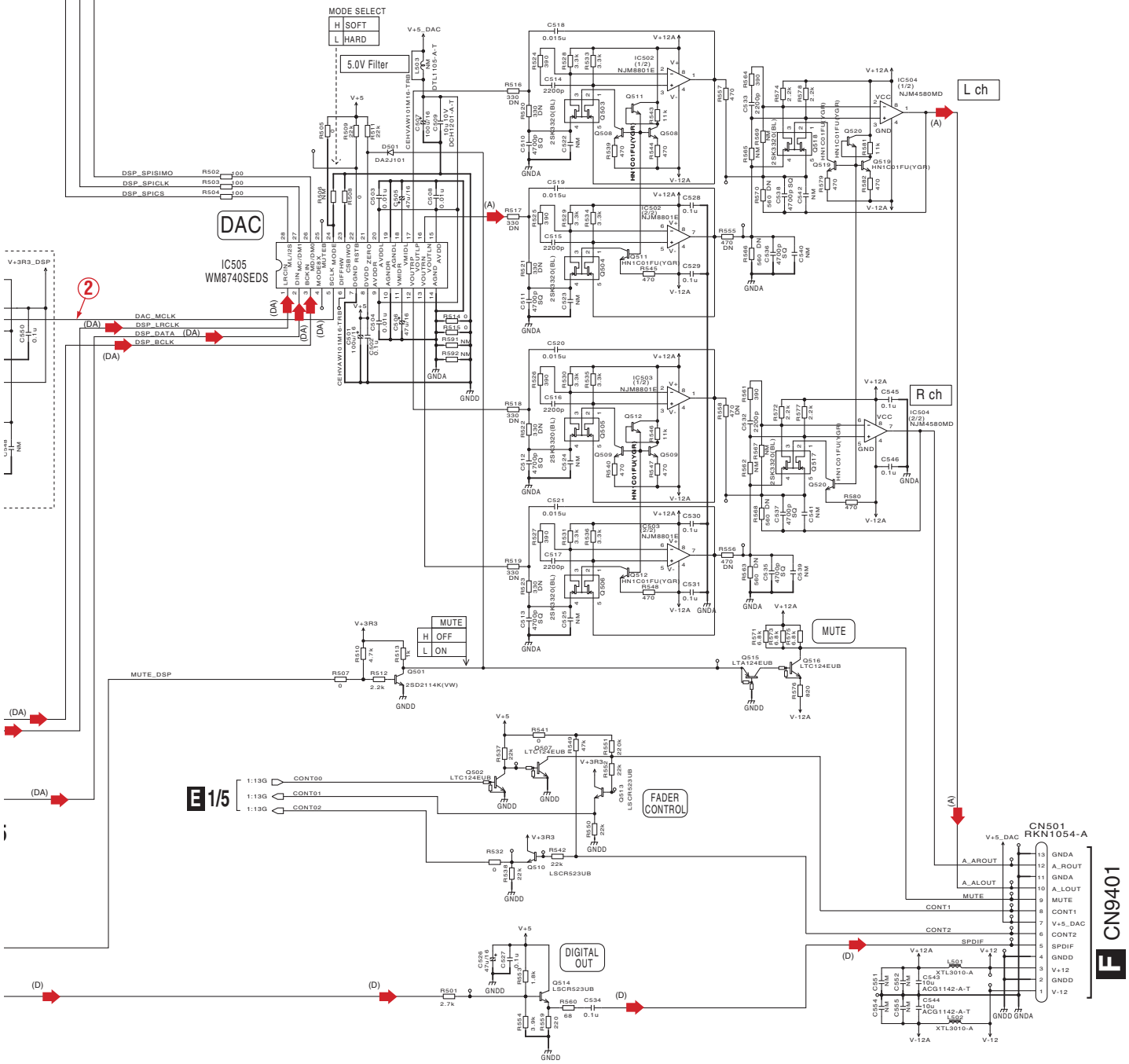

*CAPACITORS
Indicated in Capacity/Voltage(V)
unless otherwise noted. u: µF, p: pF

*RESISTORS
Indicated in Ω, ± 5% tolerance
unless otherwise noted. k: kΩ, M: MΩ

NOTES
NM means STANDBY
RS1/16SS***J
RN1/16SE****D
RS1/16SS****D
RAB4CQ***J
CKSSYB
CCSSCJ
CFHXSQ
CEHVAW

(DA) : Audio Data Signal Route
(A) : Analog Audio Signal Route
(D) : Digital Data Signal Route

Downloaded from www.Manualslib.com manuals search engine

10.7 MAIN ASSY (5/5)

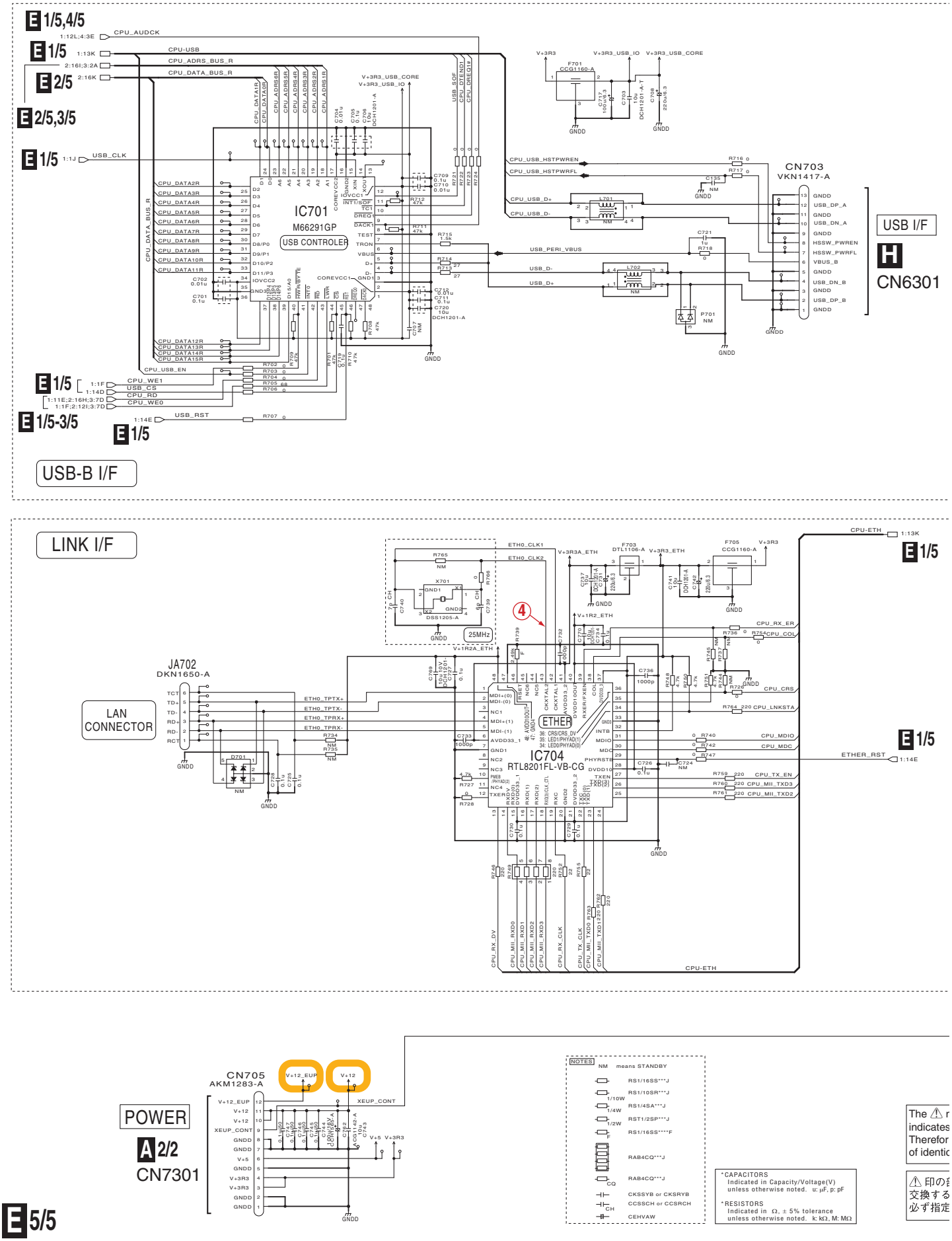

Downloaded from www.Manualslib.com manuals search engine

E 5/5 MAIN ASSY (DWX3312)

I/F Block

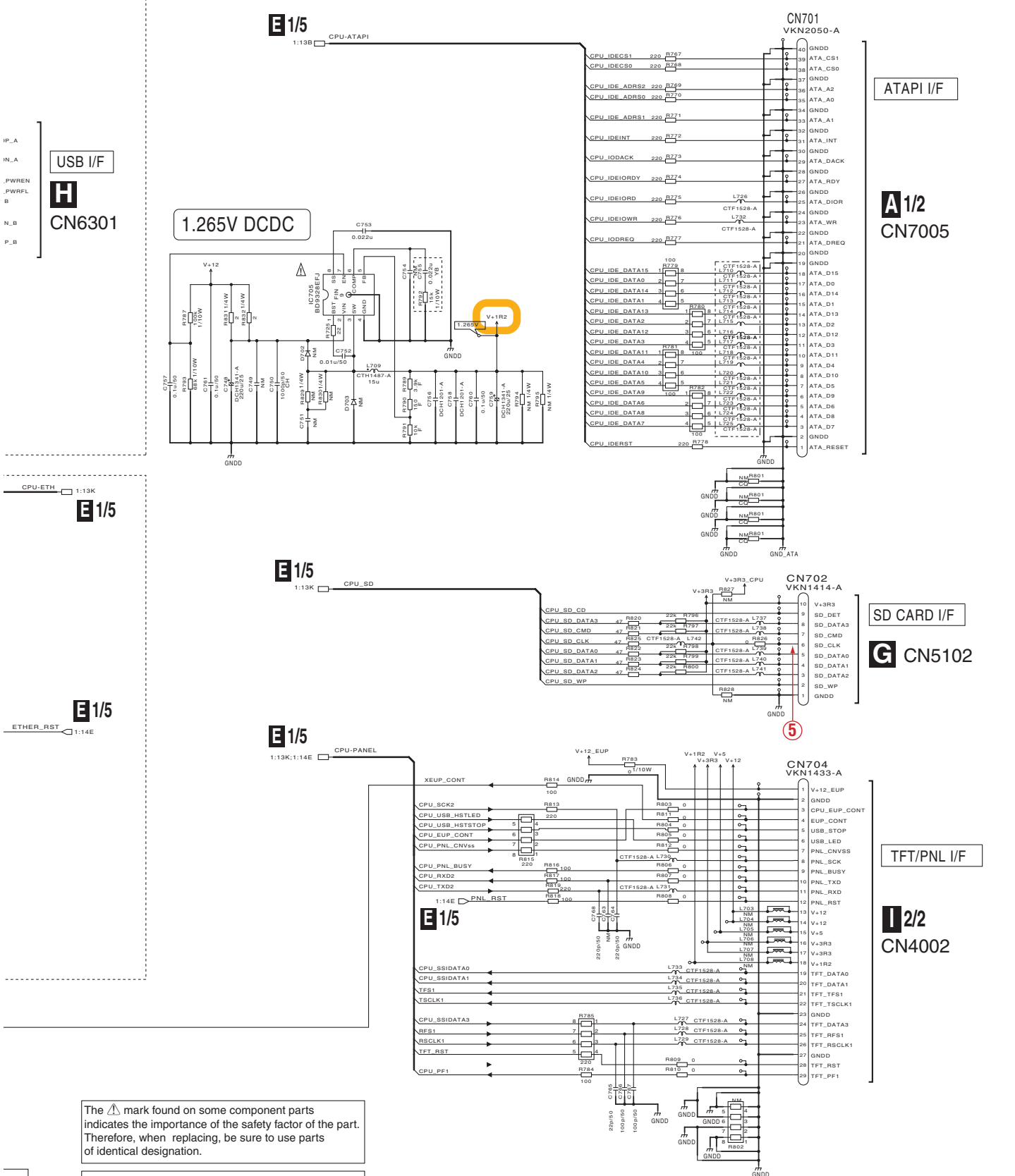

The ⚠ mark found on some component parts indicates the importance of the safety factor of the part. Therefore, when replacing, be sure to use parts of identical designation.

⚠ 印の部品は、安全上重要な部品です。
交換するときは、安全および性能維持のため
必ず指定の部品をご使用ください。

E 5/5

Downloaded from www.Manualslib.com manuals search engine

10.8 JACB ASSY

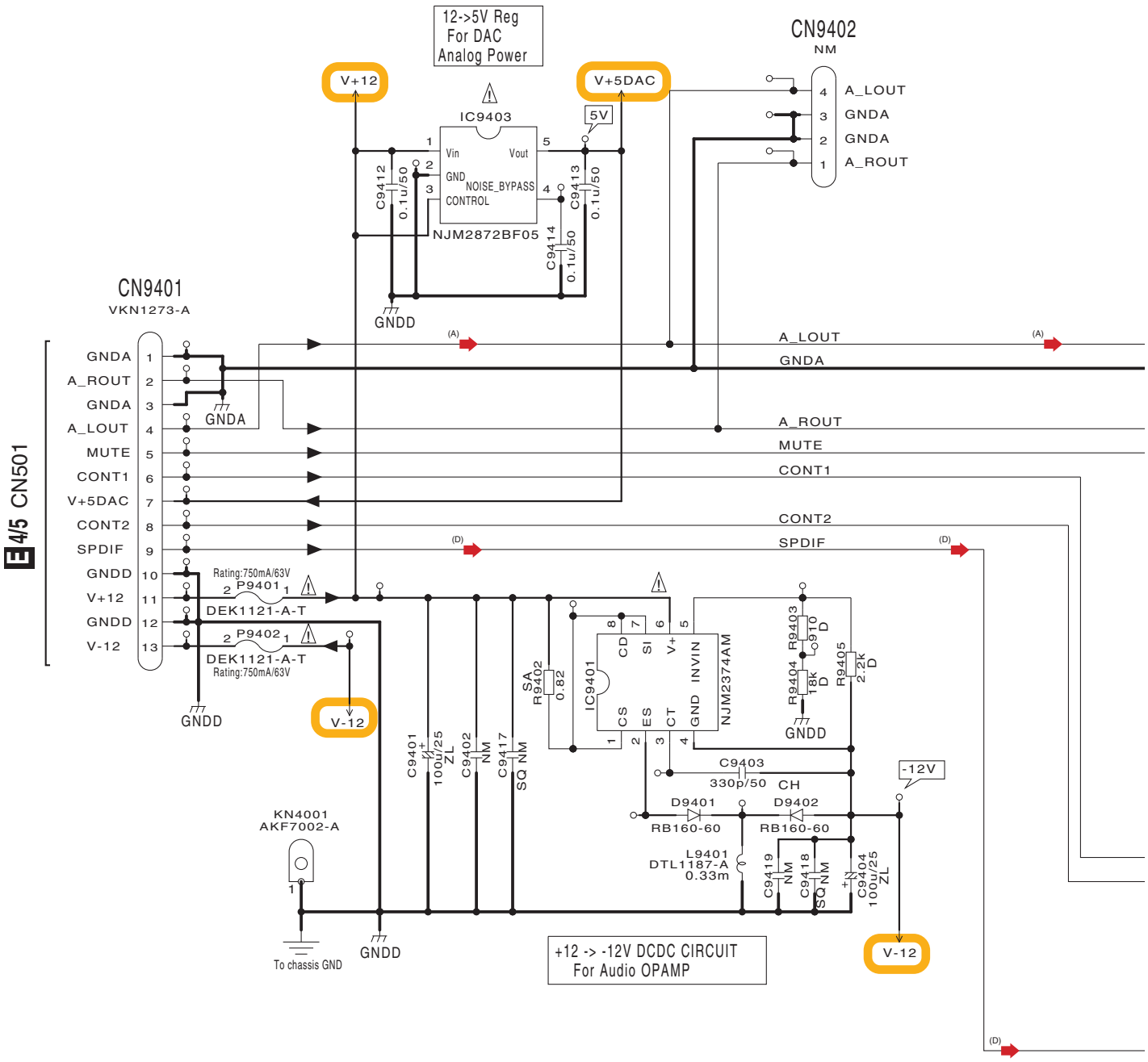

NOTES

NM means STANDBY

RS1/10SR***J

D RN1/16SE****D

SA RS1/4SA***J

VM RD1/2VM***J

CKSRYB

CH CCSRCH

SQ 2.0mm x 1.25mm size Chip ceramic capacitor

ZL CEHAZL

The ⚠ mark found on some component parts indicates the importance of the safety factor of the part. Therefore, when replacing, be sure to use parts of identical designation.

⚠ 印の部品は、安全上重要な部品です。
交換するときは、安全および性能維持のため
必ず指定の部品をご使用ください。

*CAPACITORS
Indicated in Capacity/Voltage(V)
unless otherwise noted. u: μF, p: pF

*RESISTORS
Indicated in Ω, ± 5% tolerance
unless otherwise noted. k: kΩ, M: MΩ

CAUTION : FOR CONTINUED PROTECTION AGAINST RISK OF FIRE. REPLACE ONLY WITH SAME TYPE NO. 0437.750 MFD, BY LITTELFUSE INC. FOR P9401 and P9402.

Downloaded from www.Manualslib.com manuals search engine

F JACB ASSY (DWX3350)

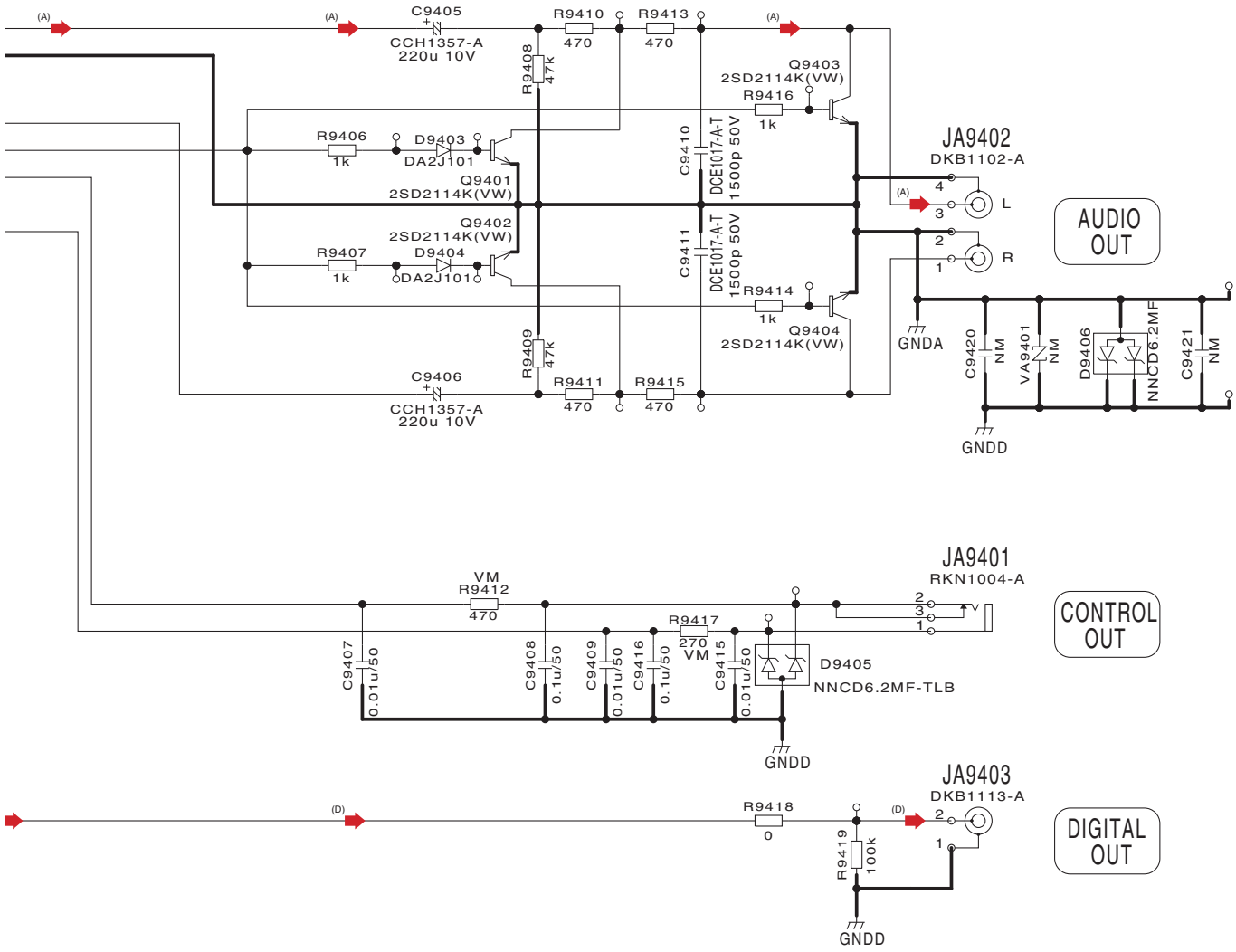

(A) : Analog Audio Signal Route
(D) : Digital Data Signal Route

Downloaded from www.Manualslib.com manuals search engine

G SDCB ASSY (DWX3333)

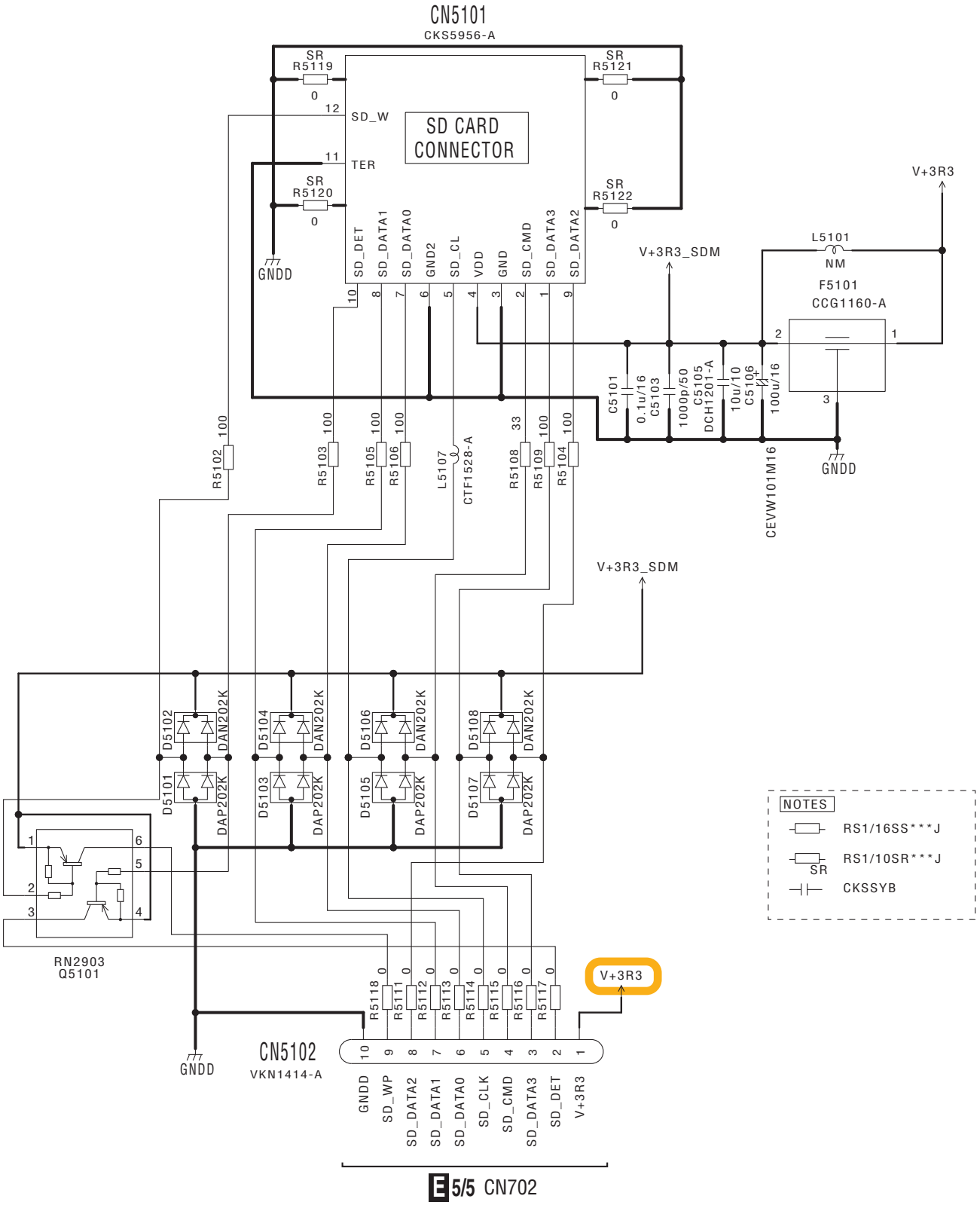

Downloaded from www.Manualslib.com manuals search engine

A

B

C

D

E

F

Downloaded from www.Manualslib.com manuals search engine

10.10 USBB ASSY

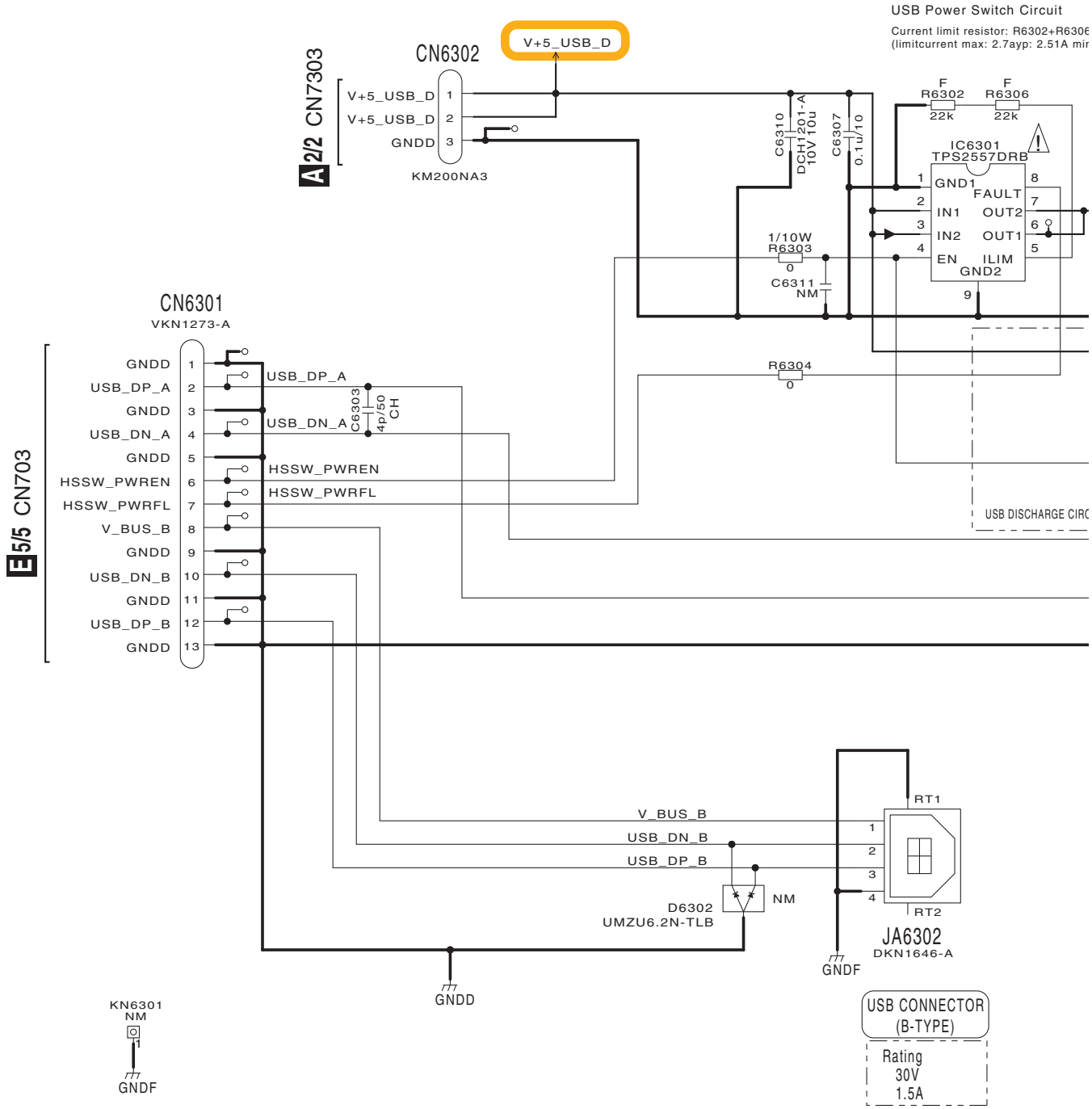

Downloaded from www.Manualslib.com manuals search engine

H USBB ASSY (DWX3395)

ver Switch Circuit

nit resistor: R6302+R6306=44kΩ
nt max: 2.7ayp: 2.51A min: 2.20A)

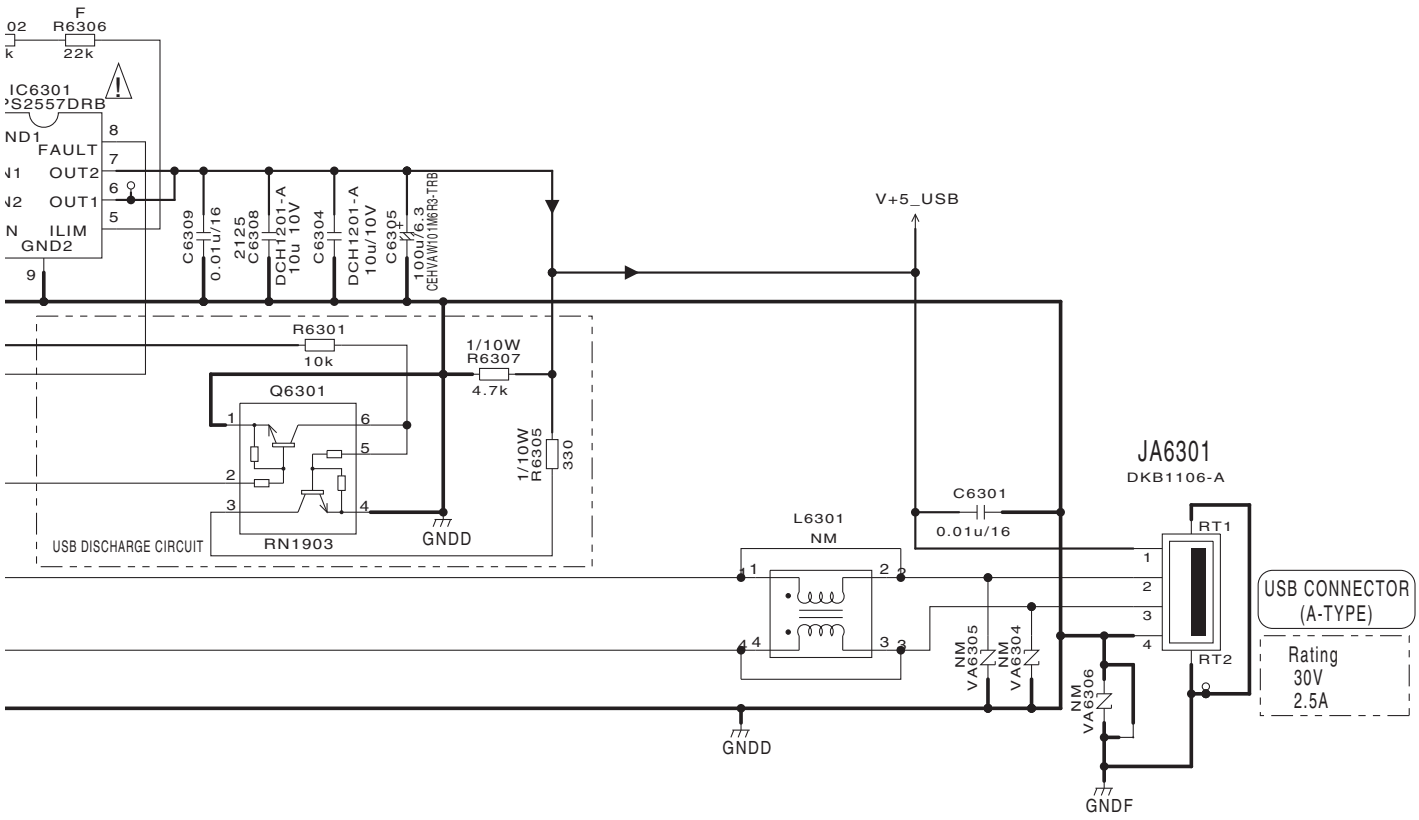

NOTES

NM means STANDBY

RS1/16SS***J

RS1/16SS****F

RS1/10SR***J

CKSSYB

CCSRCH

The ⚠ mark found on some component parts indicates the importance of the safety factor of the part. Therefore, when replacing, be sure to use parts of identical designation.

⚠ 印の部品は、安全上重要な部品です。
交換するときは、安全および性能維持のため
必ず指定の部品をご使用ください。

*CAPACITORS
Indicated in Capacity/Voltage(V)
unless otherwise noted. u: μF, p: pF

*RESISTORS
Indicated in Ω, ± 5% tolerance
unless otherwise noted. k: kΩ, M: MΩ

Downloaded from www.Manualslib.com manuals search engine

10.11 TFTB ASSY (1/2)

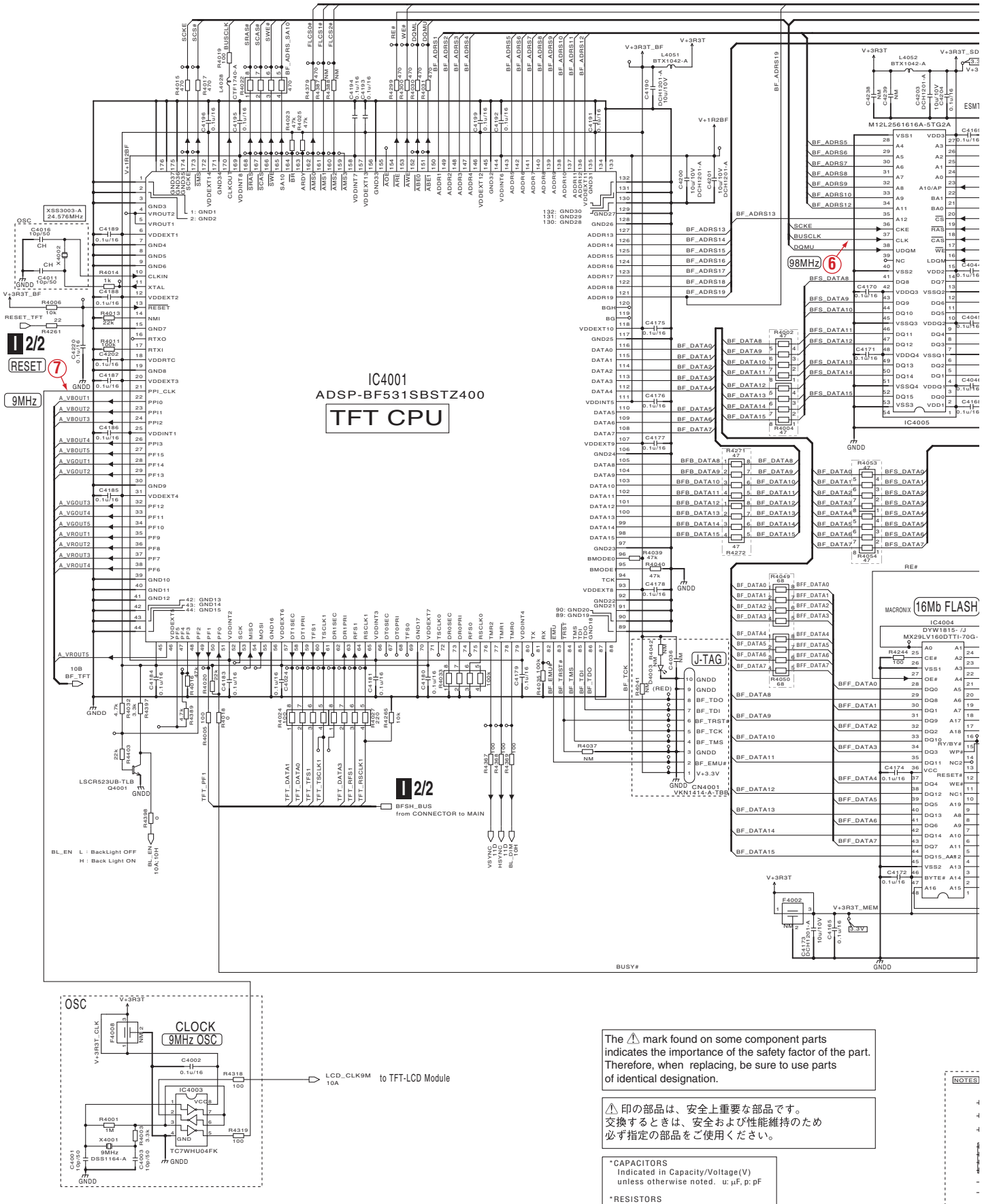

The ⚠ mark found on some component parts indicates the importance of the safety factor of the part. Therefore, when replacing, be sure to use parts of identical designation.

⚠ 印の部品は、安全上重要な部品です。
交換するときは、安全および性能維持のため
必ず指定の部品をご使用ください。

*CAPACITORS
Indicated in Capacity/Voltage(V)
unless otherwise noted. u: μF, p: pF

*RESISTORS
Indicated in Ω, ± 5% tolerance
unless otherwise noted. k: kΩ, M: MΩ

NOTES

Downloaded from www.Manualslib.com manuals search engine

1/2 TFTB ASSY (DWX3331)

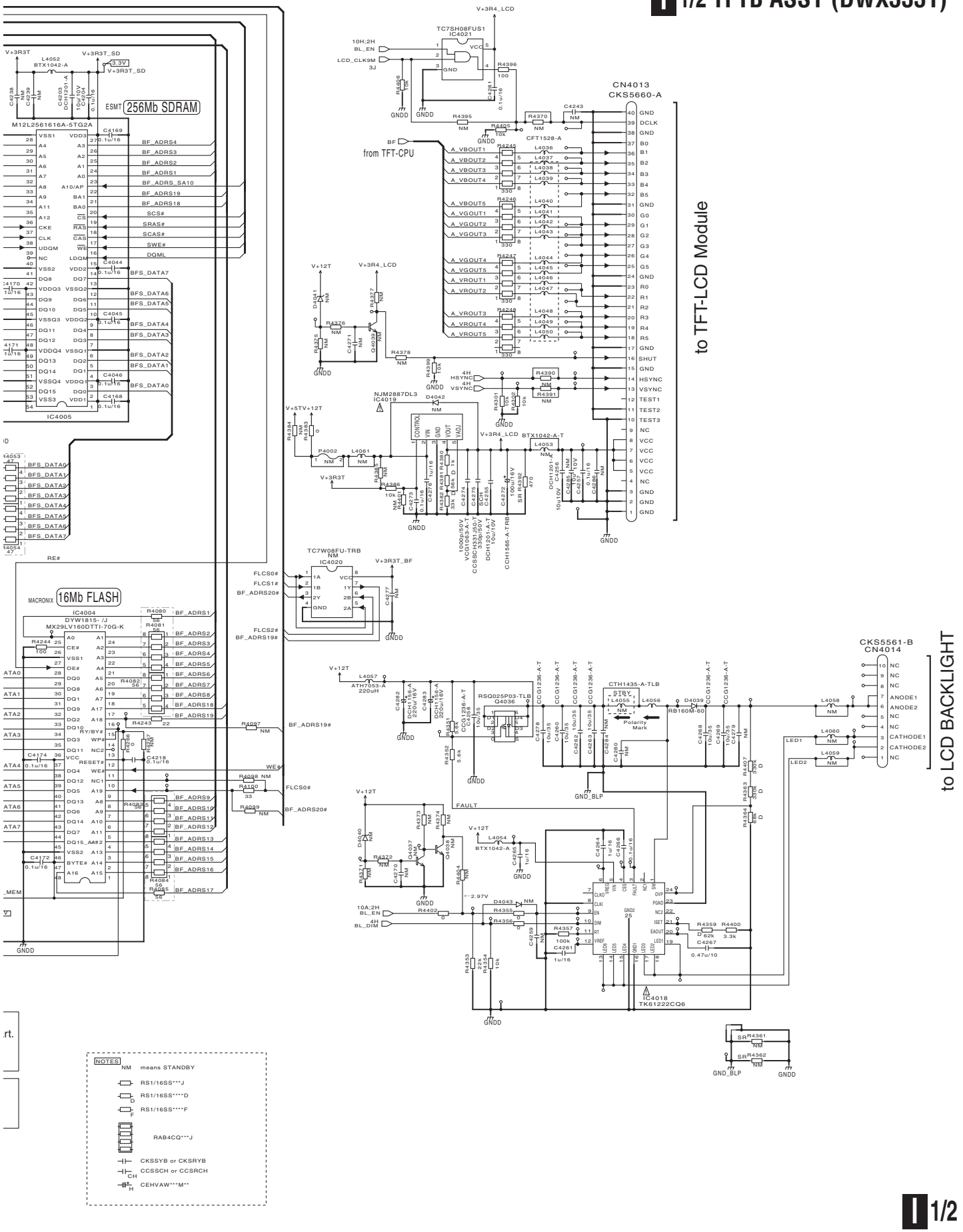

Downloaded from www.Manualslib.com manuals search engine

10.12 TFTB ASSY (2/2)

The ⚠ mark found on some component parts indicates the importance of the safety factor of the part. Therefore, when replacing, be sure to use parts of identical designation.

⚠ 印の部品は、安全上重要な部品です。
交換するときは、安全および性能維持のため
必ず指定の部品をご使用ください。

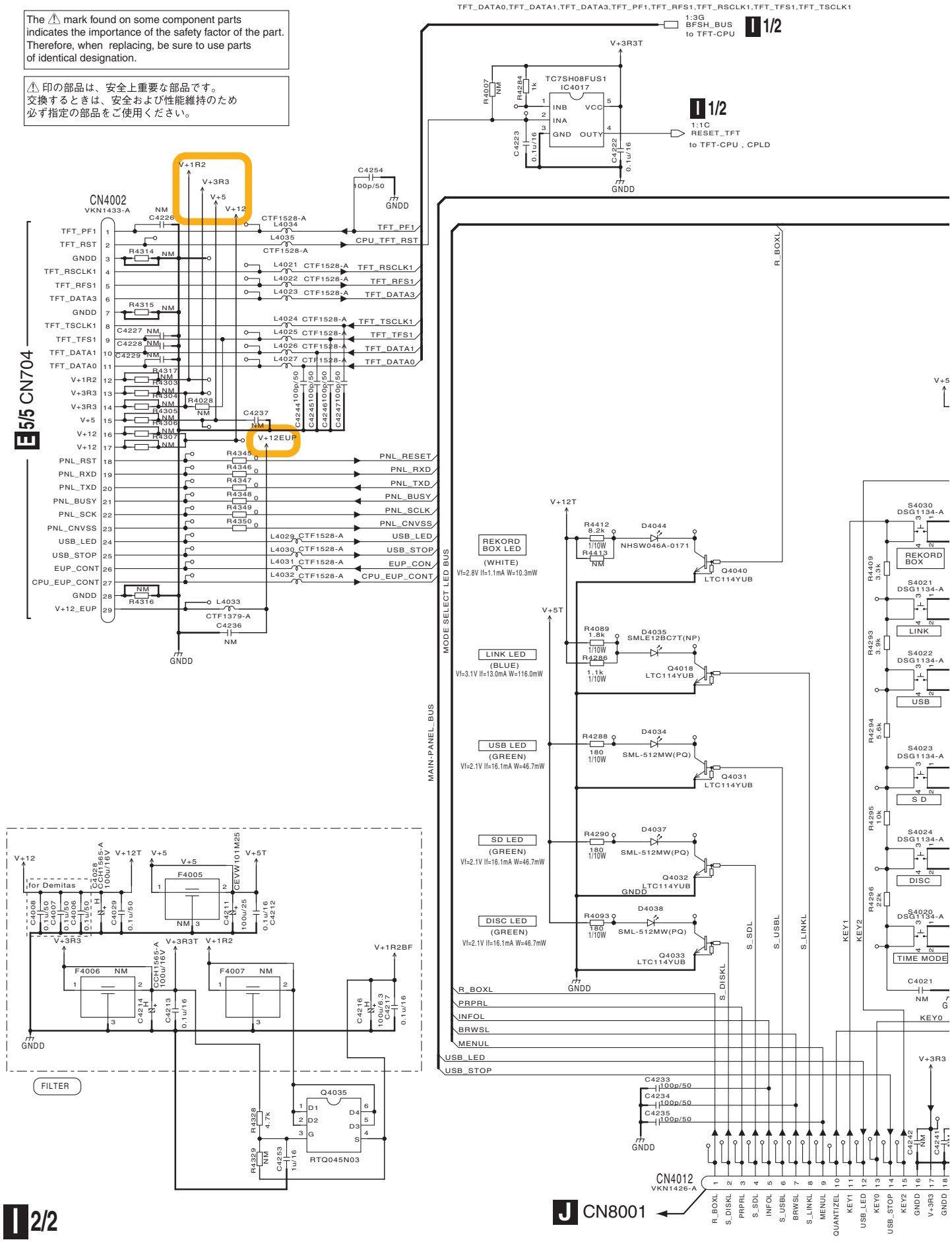

Downloaded from www.Manualslib.com manuals search engine

I 2/2 TFTB ASSY (DWX3331)

*CAPACITORS
Indicated in Capacity/Voltage(V)
unless otherwise noted. u: µF, p: pF

*RESISTORS
Indicated in Ω, ± 5% tolerance
unless otherwise noted. k: kΩ, M: MΩ

NOTES
NM means STANDBY
RS1/16SS***J
RS1/10SR***J 1/10W
RS1/10SR****F
CKSSYB or CKSRYB
CCSSCH or CCSRCH CH
CEVW***M**
CEHVAW***M** H

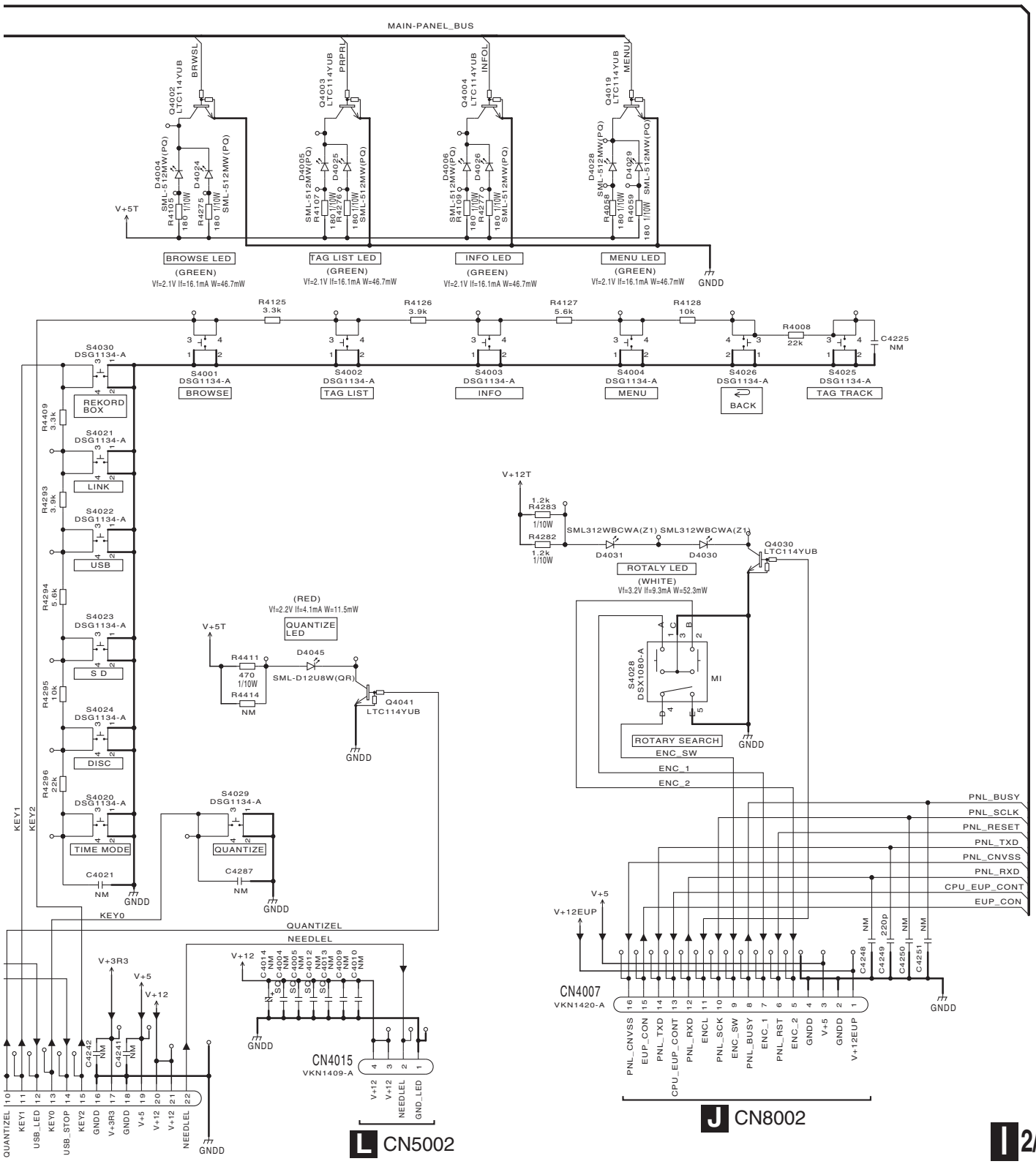

Downloaded from www.Manualslib.com manuals search engine

10.13 PNLB ASSY

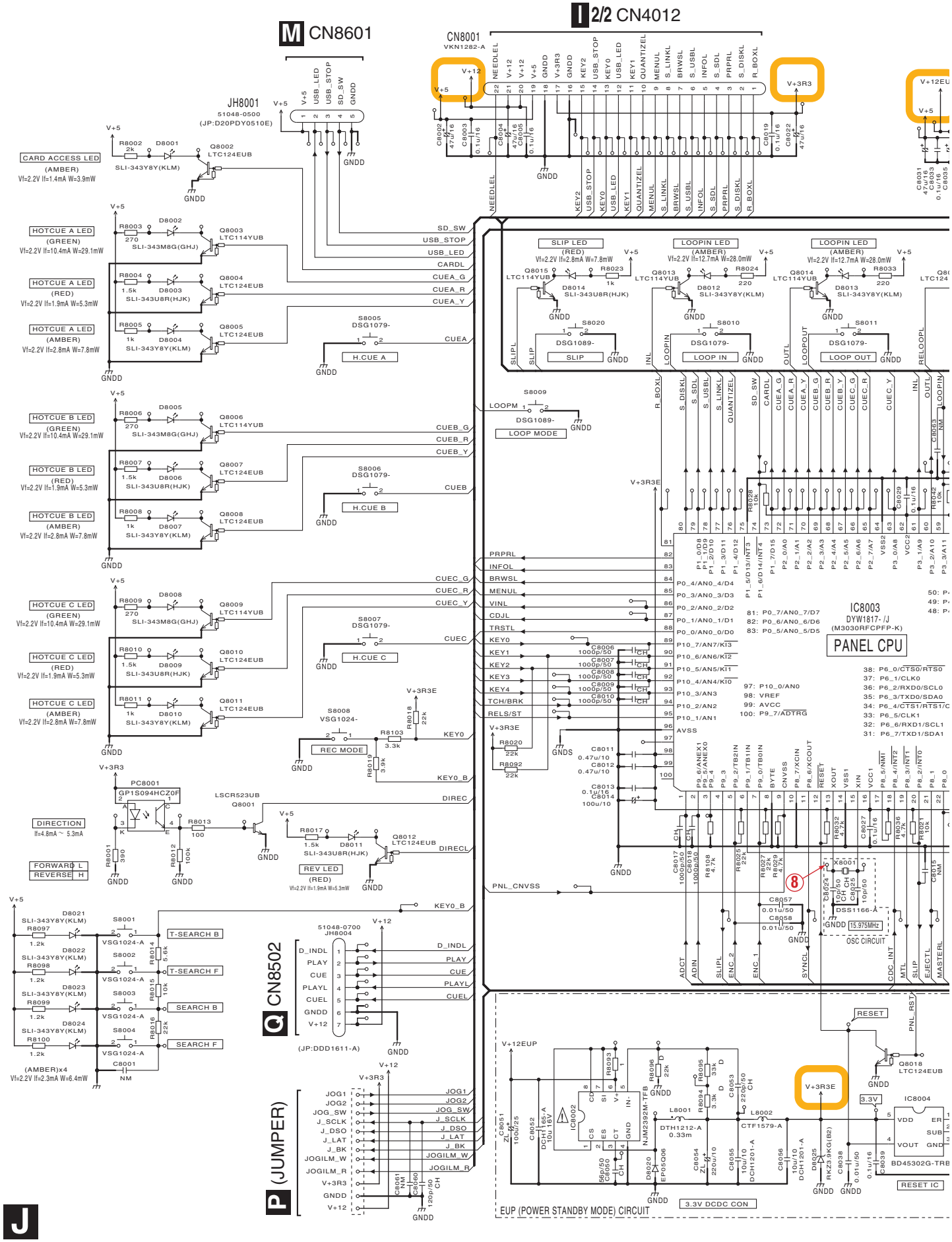

Downloaded from www.Manualslib.com manuals search engine

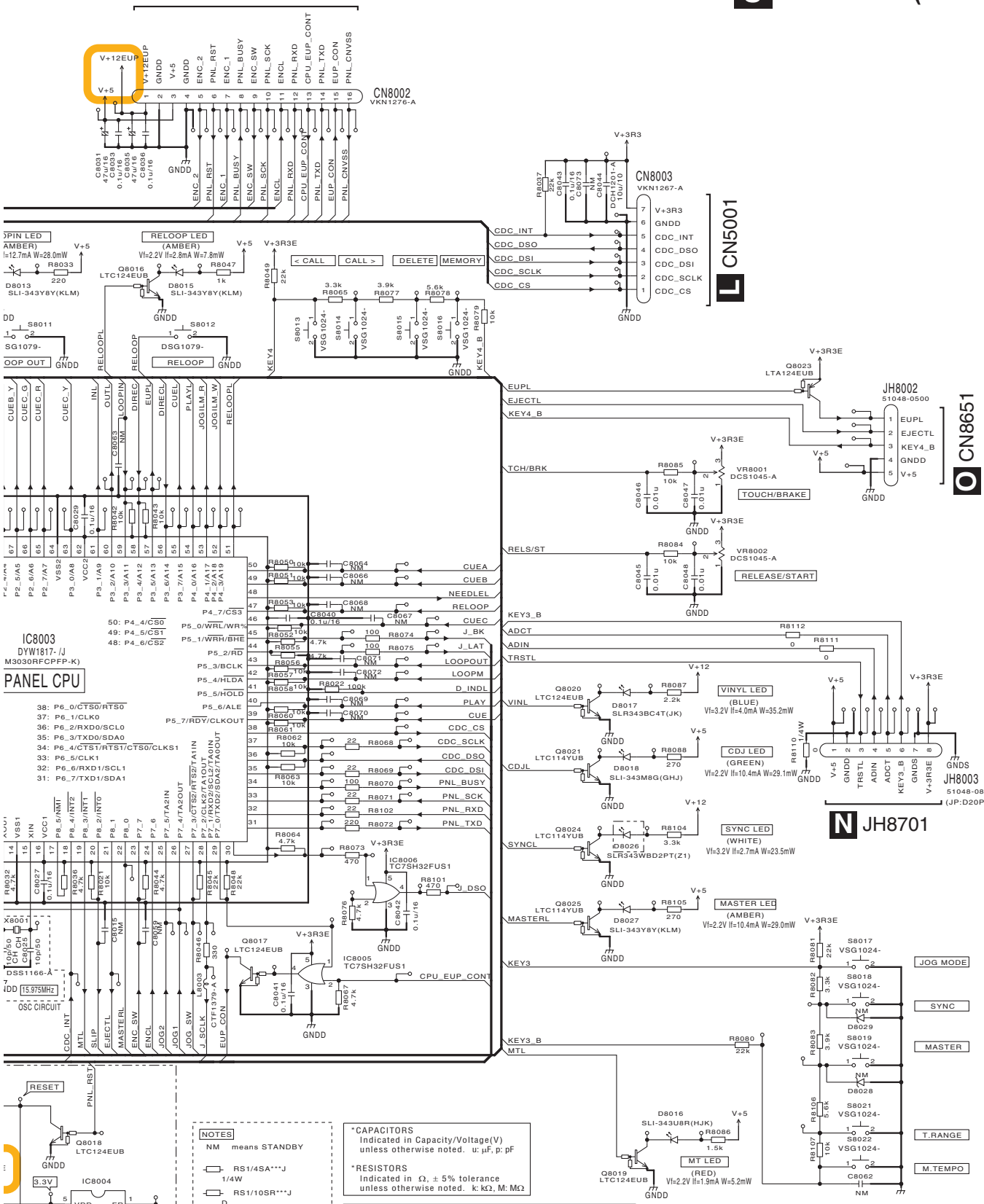

Downloaded from www.Manualslib.com manuals search engine

10.14 JFLB ASSY

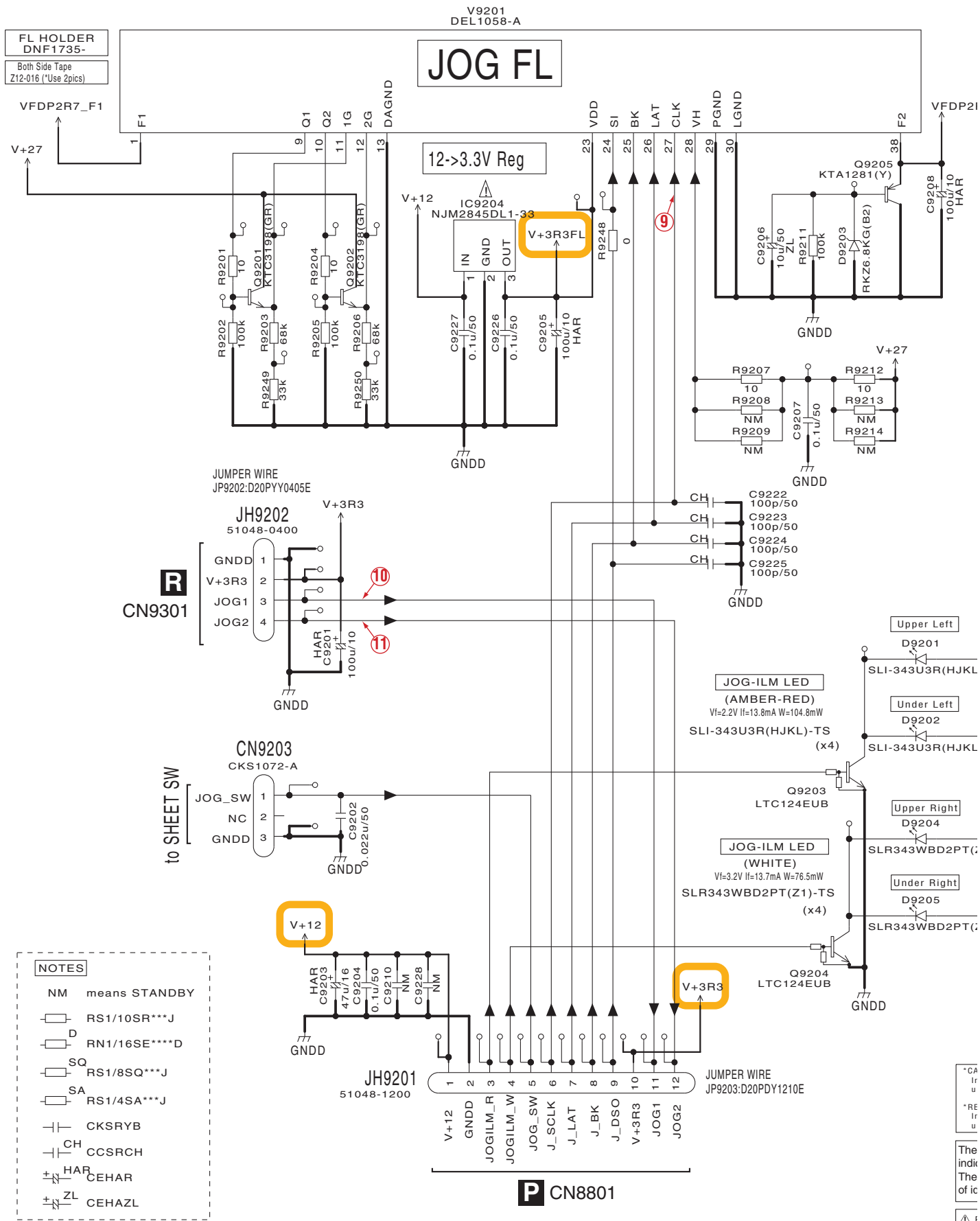

Downloaded from www.Manualslib.com manuals search engine

K JFLB ASSY (DWX3348)

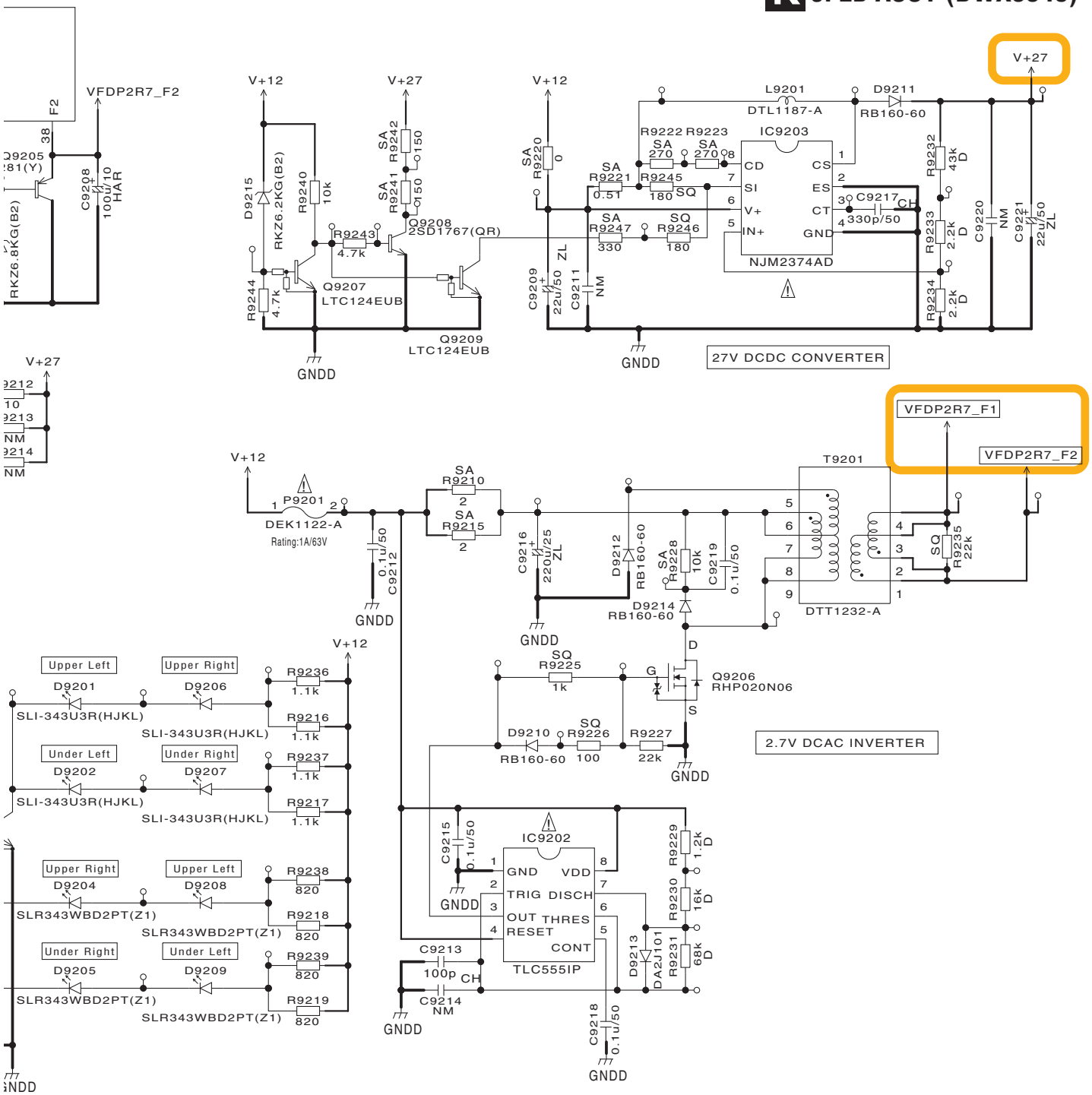

*CAPACITORS
Indicated in Capacity/Voltage(V)
unless otherwise noted. u: µF, p: pF

*RESISTORS
Indicated in Ω, ± 5% tolerance
unless otherwise noted. k: kΩ, M: MΩ

The ⚠ mark found on some component parts indicates the importance of the safety factor of the part. Therefore, when replacing, be sure to use parts of identical designation.

⚠ 印の部品は、安全上重要な部品です。
交換するときは、安全および性能維持のため
必ず指定の部品をご使用ください。

CAUTION : FOR CONTINUED PROTECTION AGAINST RISK OF FIRE. REPLACE ONLY WITH SAME TYPE NO. 0437001. MFD, BY LITTELFUSE INC. FOR P9201.

Downloaded from www.Manualslib.com manuals search engine

10.15 CDCB and SDSW ASSYS

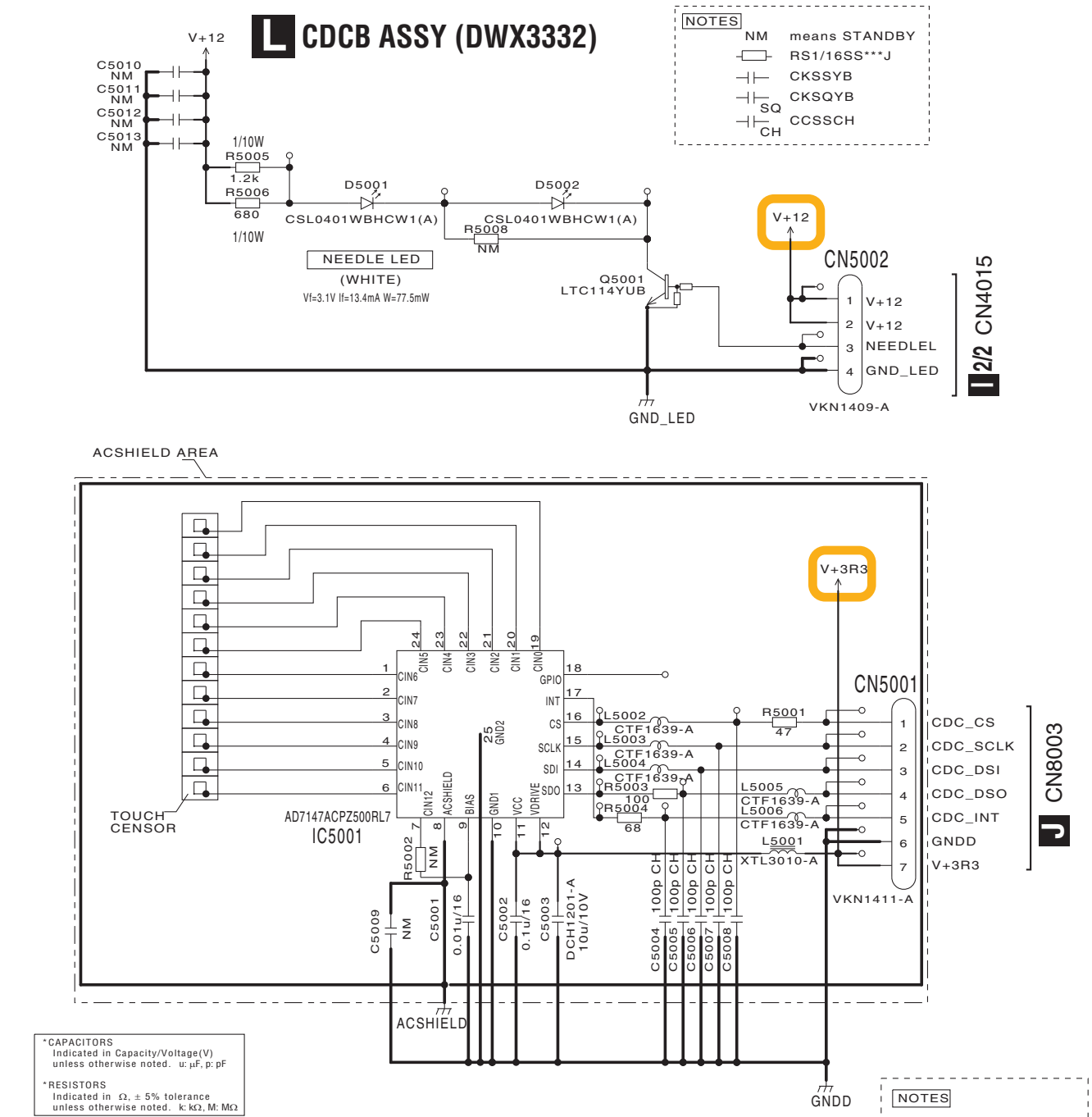

L M

Downloaded from www.Manualslib.com manuals search engine

10.16 SLDB and EUPB ASSYS

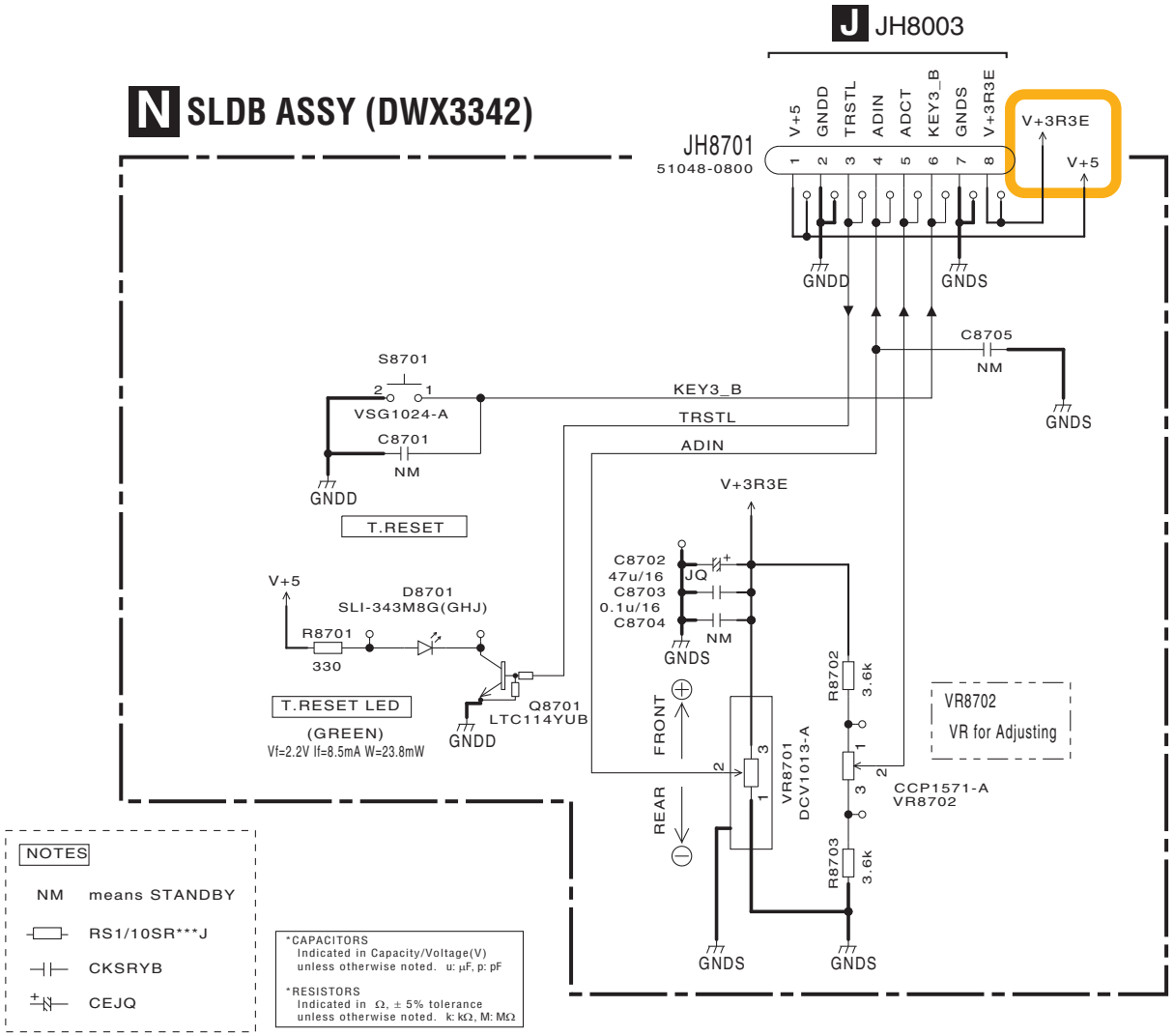

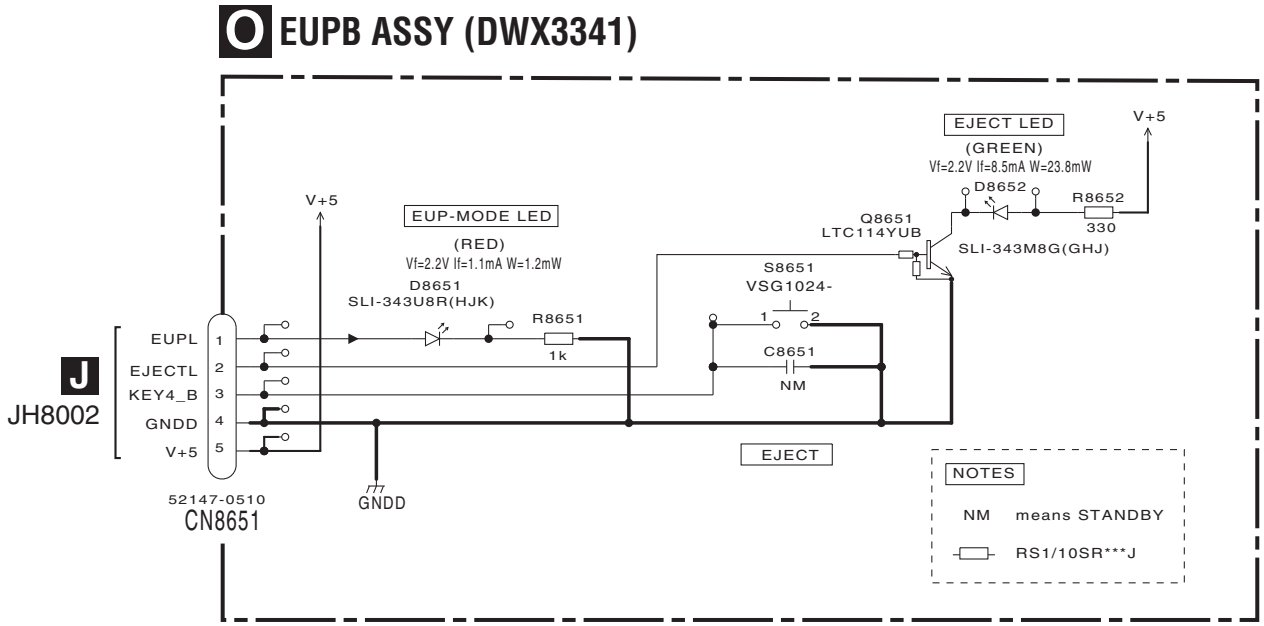

Downloaded from www.Manualslib.com manuals search engine

10.17 CNCT and KSWB ASSYS

P CNCT ASSY (DWX3343)

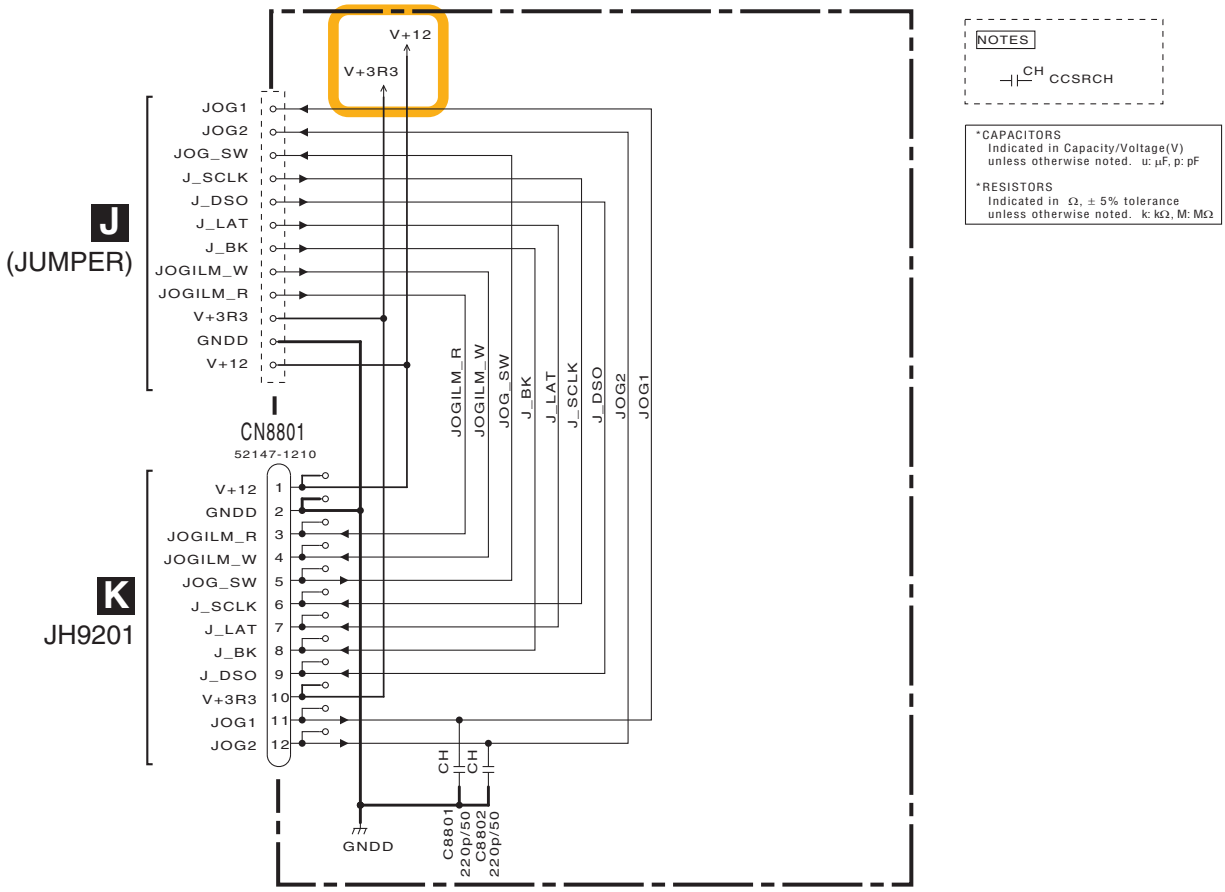

Q KSWB ASSY (DWX3339)

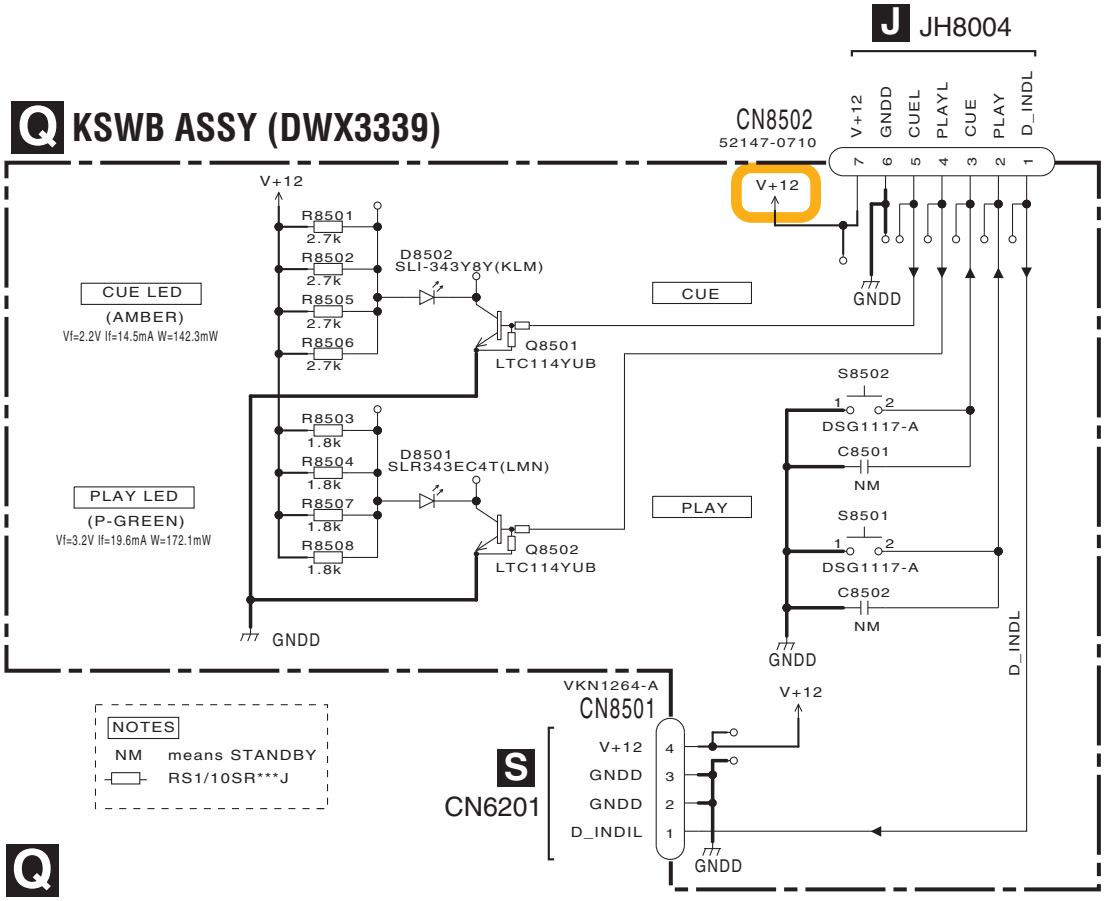

Downloaded from www.Manualslib.com manuals search engine

10.18 JOGB and INDB ASSYS

R JOGB ASSY (DWX3349)

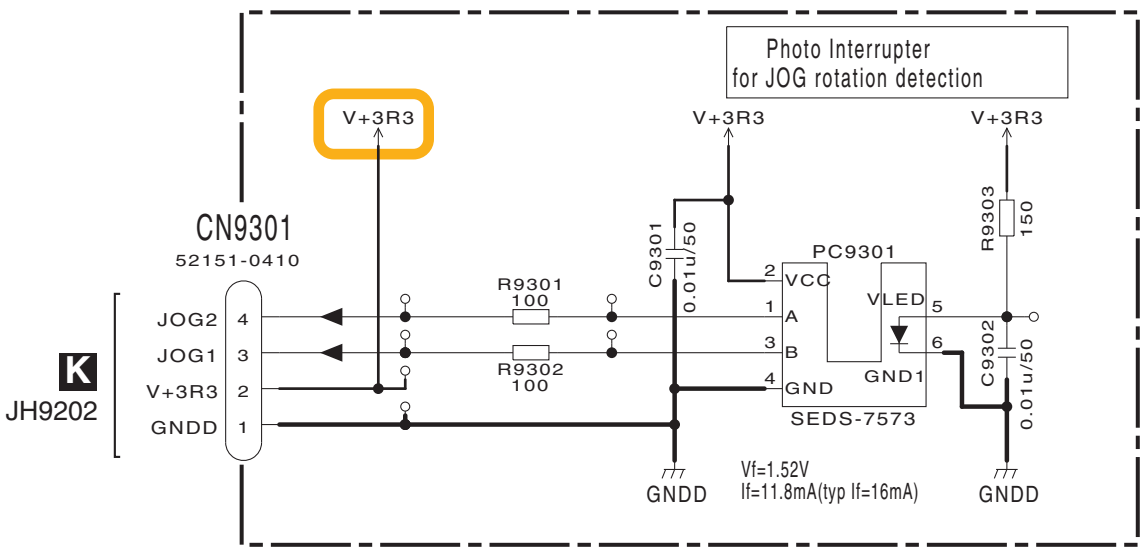

*CAPACITORS
Indicated in Capacity/Voltage(V)
unless otherwise noted. u: μF, p: pF

*RESISTORS
Indicated in Ω, ± 5% tolerance
unless otherwise noted. k: kΩ, M: MΩ

NOTES
RS1/10SR***J
CKSRYB

S INDB ASSY (DWX3337)

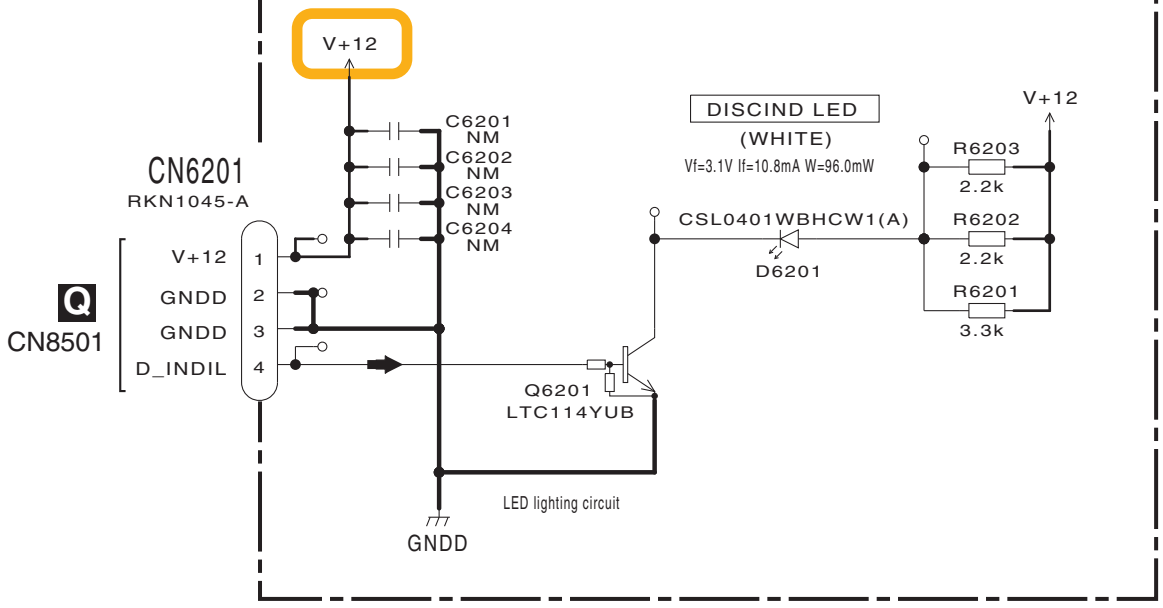

NOTES
RS1/10SR***J

Downloaded from www.Manualslib.com manuals search engine

10.19 POWER SUPPLY and ACIN ASSYS

DESTINATION	AC INLET	AC POWER CORD
/SYXJ8	DKP3935-	XDG3061-
/FLXJ	DKP3935-	XDG3061-ADG7076-(Taiwan)
/AXJ5	DKP3935-	ADG7105-
/KXJ5	DKP3935-	ADG7115-
/UXJCB	DKP3934-	DDG1108-

U ACIN ASSY (DWX3346)

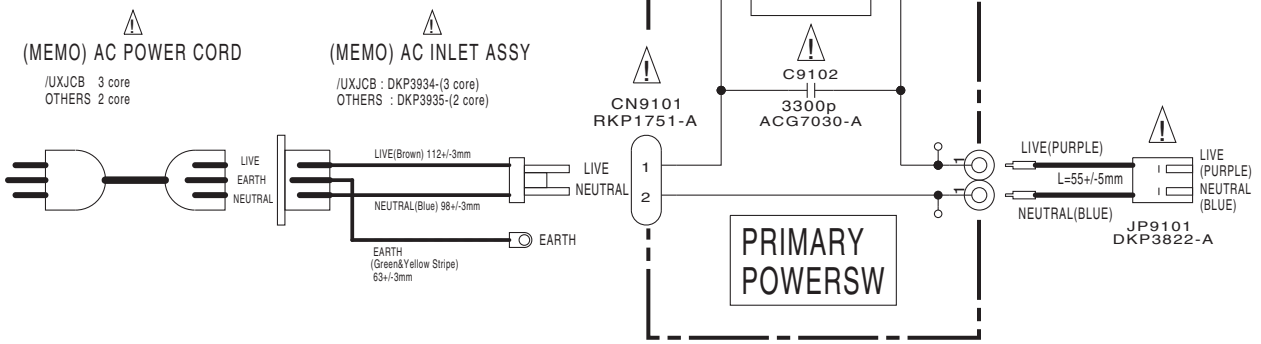

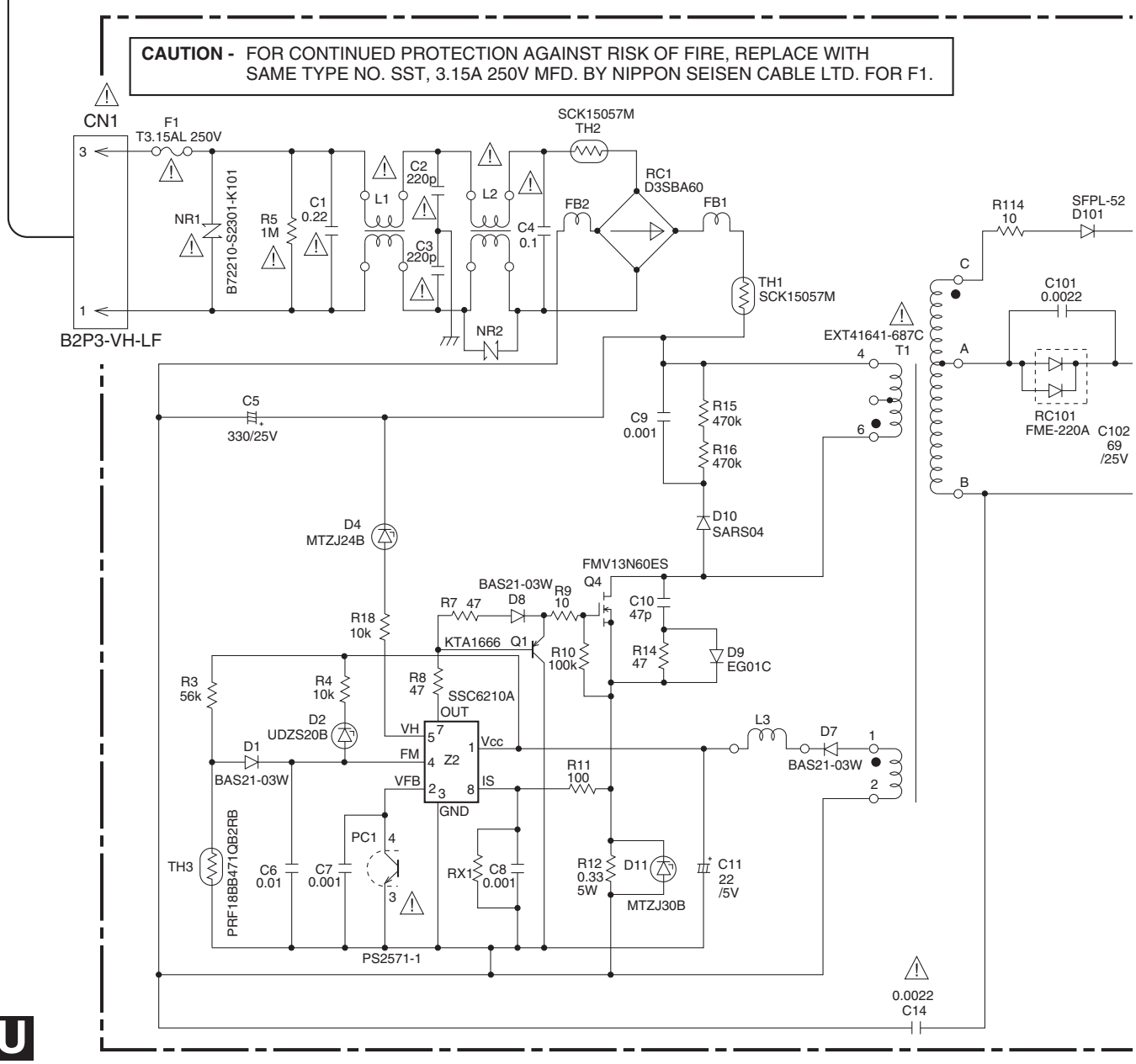

Downloaded from www.Manualslib.com manuals search engine

*CAPACITORS
Indicated in Capacity/Voltage(V)
unless otherwise noted. u: μF, p: pF

*RESISTORS
Indicated in Ω, ± 5% tolerance
unless otherwise noted. k: kΩ, M: MΩ

The ⚠ mark found on some component parts indicates the importance of the safety factor of the part. Therefore, when replacing, be sure to use parts of identical designation.

T POWER SUPPLY ASSY (DWR1463)

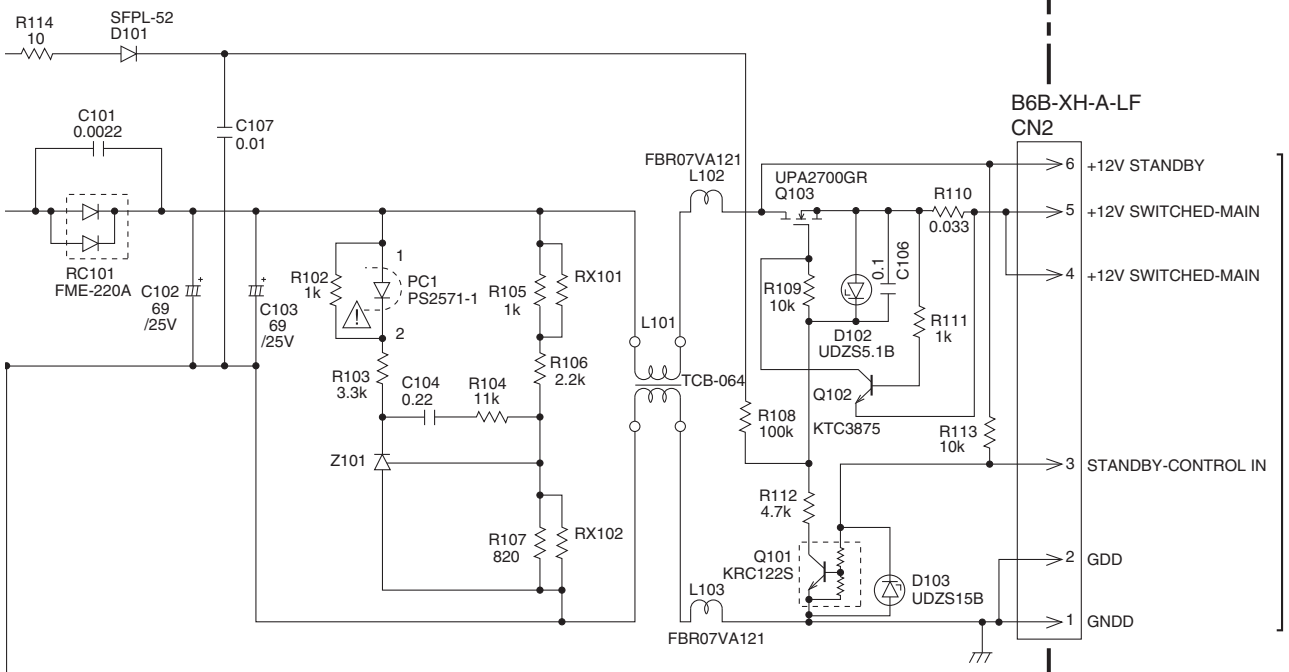

Downloaded from www.Manualslib.com manuals search engine

10.20 WAVEFORMS

注意: ◯で囲まれた数字は回路図及びPCB図の各測定ポイントの番号を示します.

NOTE: The encircled numbers denote measuring point in the schematic diagram and PCB diagram.

E MAIN ASSY

MODE: PLAY

① **IC1 - pin 38 (CPU_CLKOUT) 108MHz**
V: 1.0 V/div. H: 5.0 nsec/div.

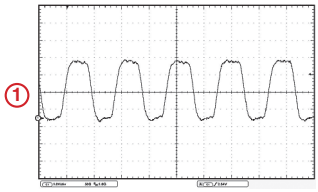

MODE: PLAY

② **IC506 - pin 7 (DAC_MCLK) 16.9344MHz**
V: 1.0 V/div. H: 20.0 nsec/div.

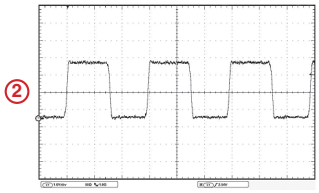

MODE: PLAY

③ **IC4 - pin 2 (TP) (USB_CLK)**
V: 1.0 V/div. H: 12.5 nsec/div.

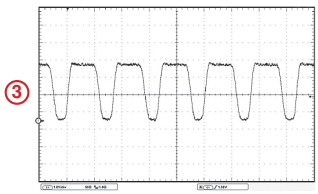

MODE: PLAY

④ **IC704 - pin 43 (ETH0_CLK2)**
V: 500 mV/div. H: 25.0 nsec/div.

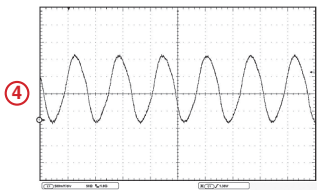

MODE: SD card PLAY

⑤ **CN702 - pin 6 (CPU_SD_CLK)**
V: 1.0 V/div. H: 20.0 nsec/div.

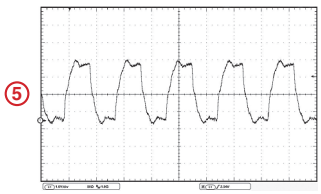

I TFTB ASSY

MODE: PLAY

⑥ **IC4005 - pin 38 (BUSCLK) 98MHz**
V: 1.0 V/div. H: 5.0 nsec/div.

MODE: PLAY

⑦ **IC4001 - pin 21 (PPI_CLK)**
V: 1.0 V/div. H: 50.0 nsec/div.

J PNLB ASSY

MODE: PLAY

⑧ **IC8003 - pin 13 (XOUT)**
V: 1.0 V/div. H: 25.0 nsec/div.

K JFLB ASSY

MODE: PLAY

⑨ **V9201 - pin 27 (CLK)**
V: 1.0 V/div. H: 500.0 nsec/div.

⑩ **JH9202 - pin 3 (JOG1)**
V: 1.0 V/div. H: 800 µsec/div.

⑪ **JH9202 - pin 4 (JOG2)**
V: 1.0 V/div. H: 800 µsec/div.

Downloaded from www.Manualslib.com manuals search engine

A

B

C

D

E

F

Downloaded from www.Manualslib.com manuals search engine

11. PCB CONNECTION DIAGRAM

11.1 SRVB ASSY

SIDE A

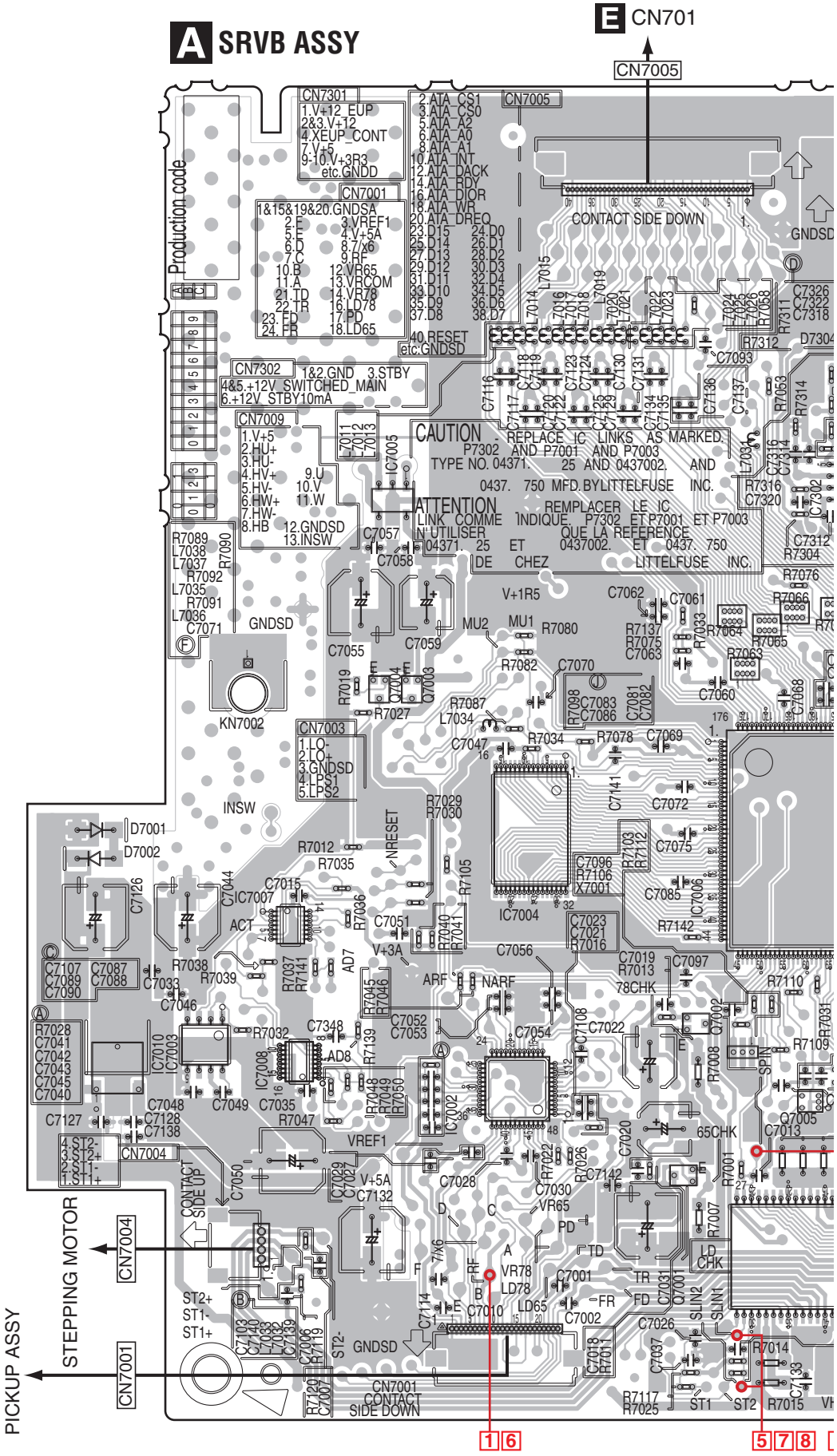

Downloaded from www.Manualslib.com manuals search engine

注意: □で囲まれた数字は各測定ポイントの番号を示します
NOTE: The circled numbers denote measuring point.

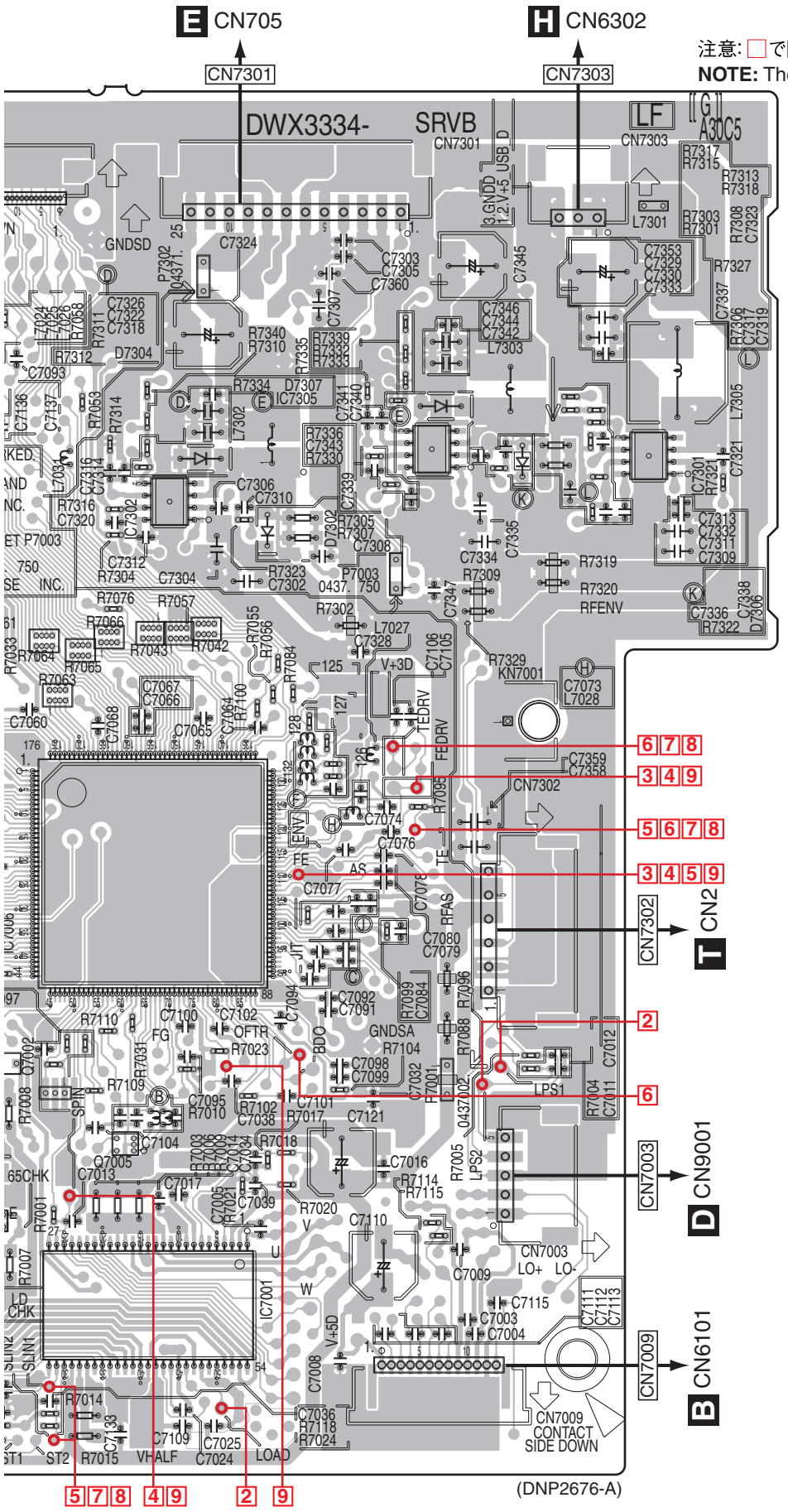

(DNP2676-A)

PCB 図に対する注意

1. この PCB 図にマウントしている部品は複数の仕向地の部品を含んでいます。各仕向地の情報は、回路図で確認するようにしてください。

2. PCB 図の見かた。

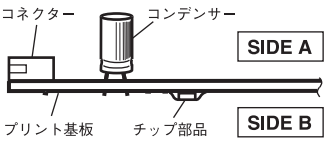

NOTE FOR PCB DIAGRAMS :

1. The parts mounted on this PCB include all necessary parts for several destinations. For further information for respective destinations, be sure to check with the schematic diagram.

2. View point of PCB diagrams.

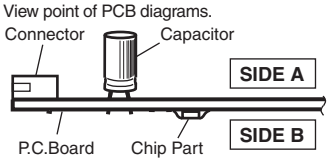

Downloaded from www.Manualslib.com manuals search engine

SIDE B

A

A SRVB ASSY

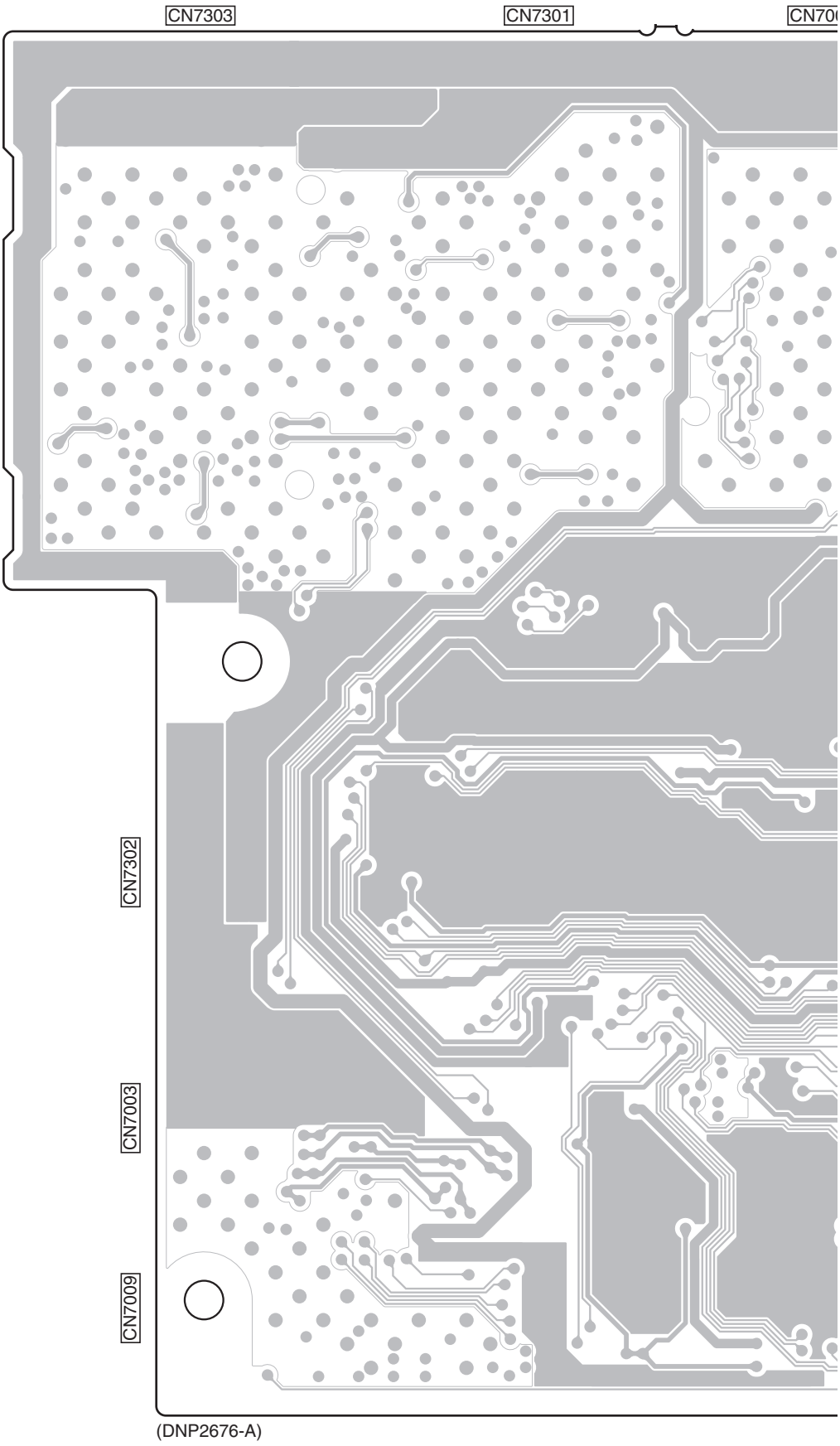

(DNP2676-A)

B

C

D

E

F

Downloaded from www.Manualslib.com manuals search engine

SIDE B

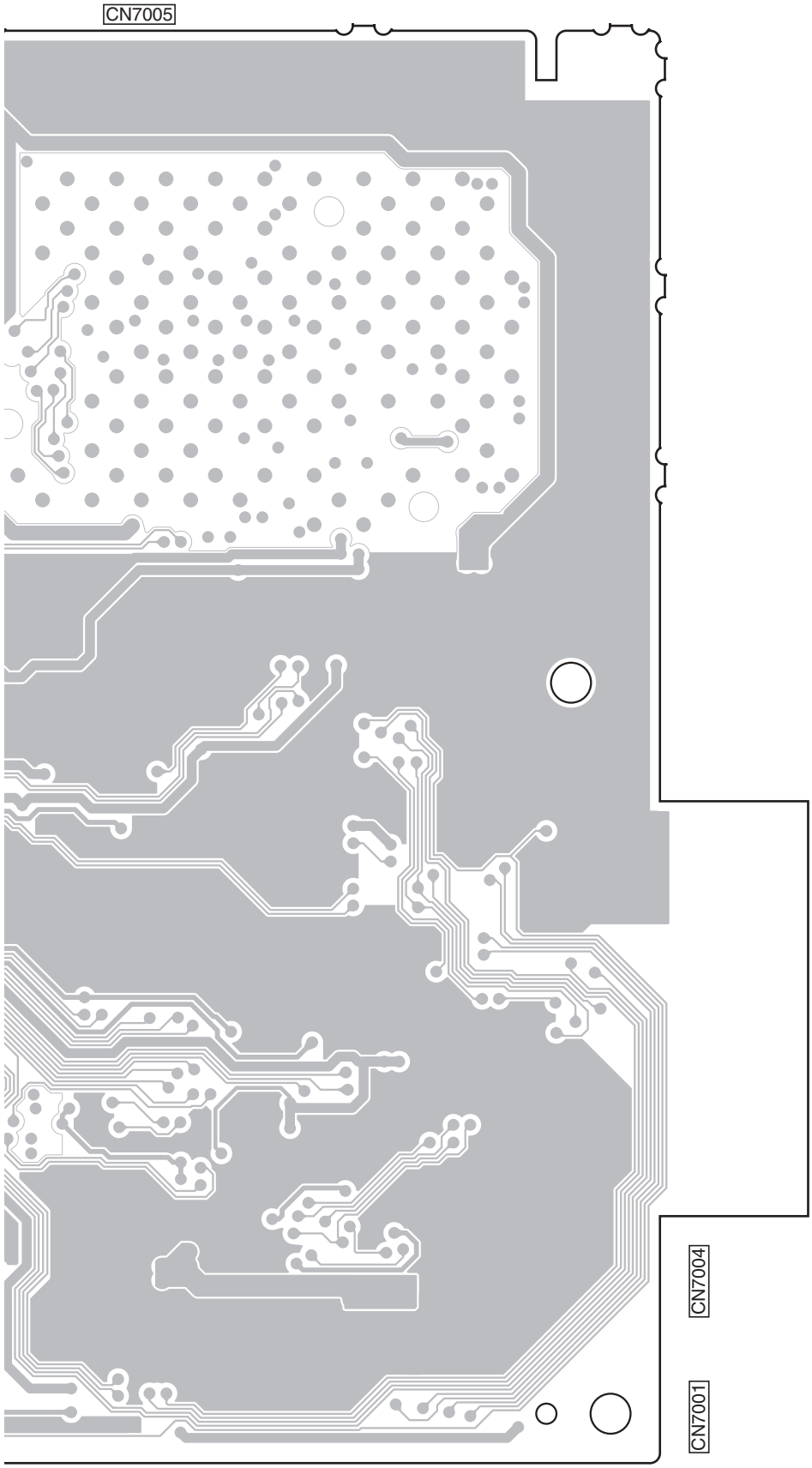

Downloaded from www.Manualslib.com manuals search engine

SIDE A

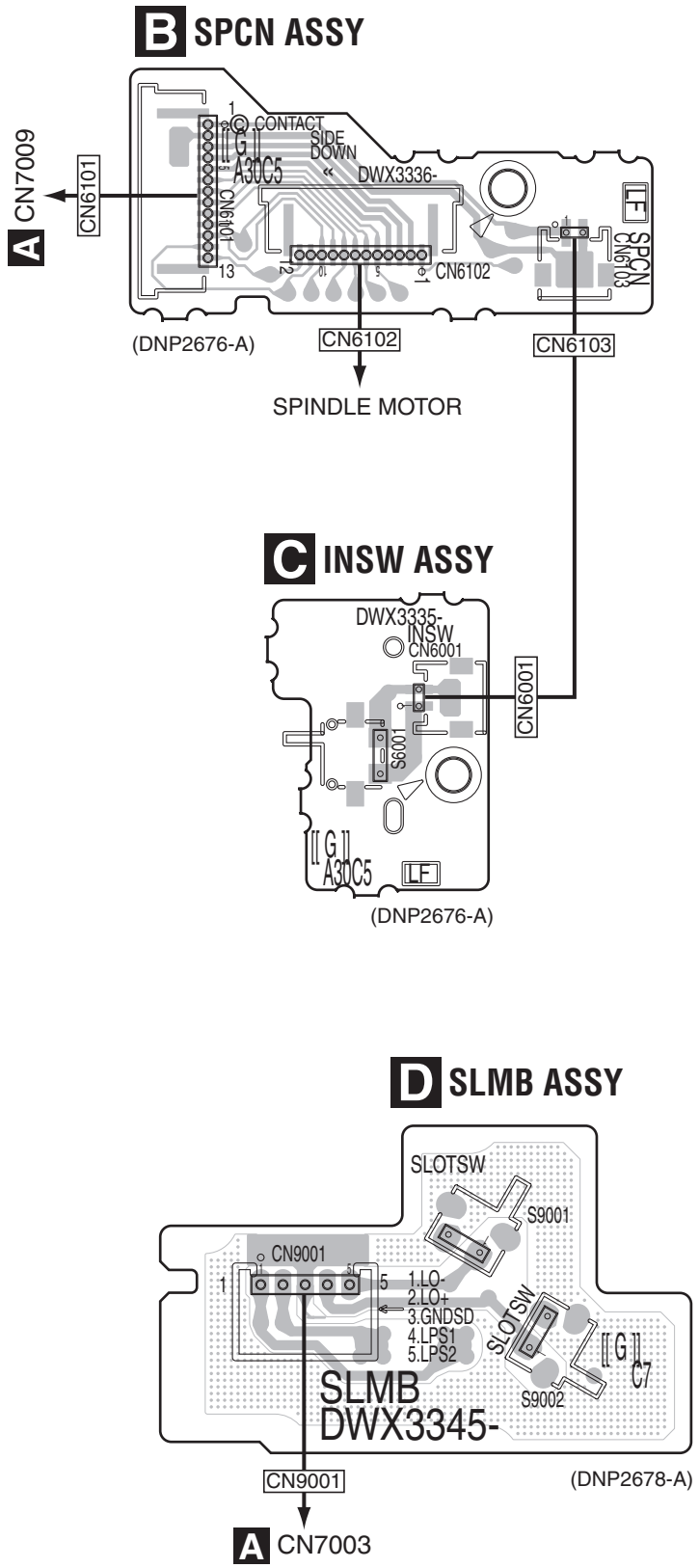

Downloaded from www.Manualslib.com manuals search engine

11.2 SPCN, INSW and SLMB ASSYS

SIDE B

B SPCN ASSY

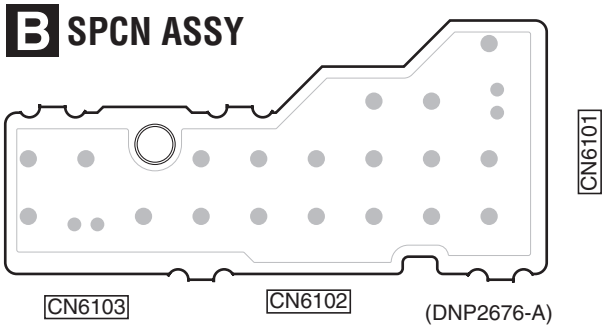

C INSW ASSY

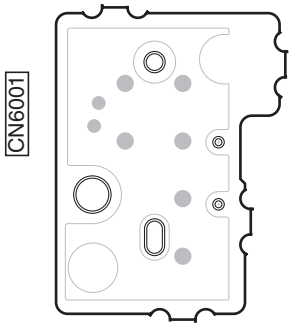

D SLMB ASSY

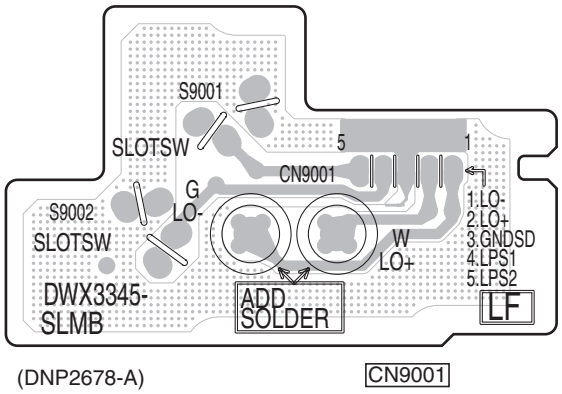

Downloaded from www.Manualslib.com manuals search engine

11.3 MAIN ASSY

SIDE A

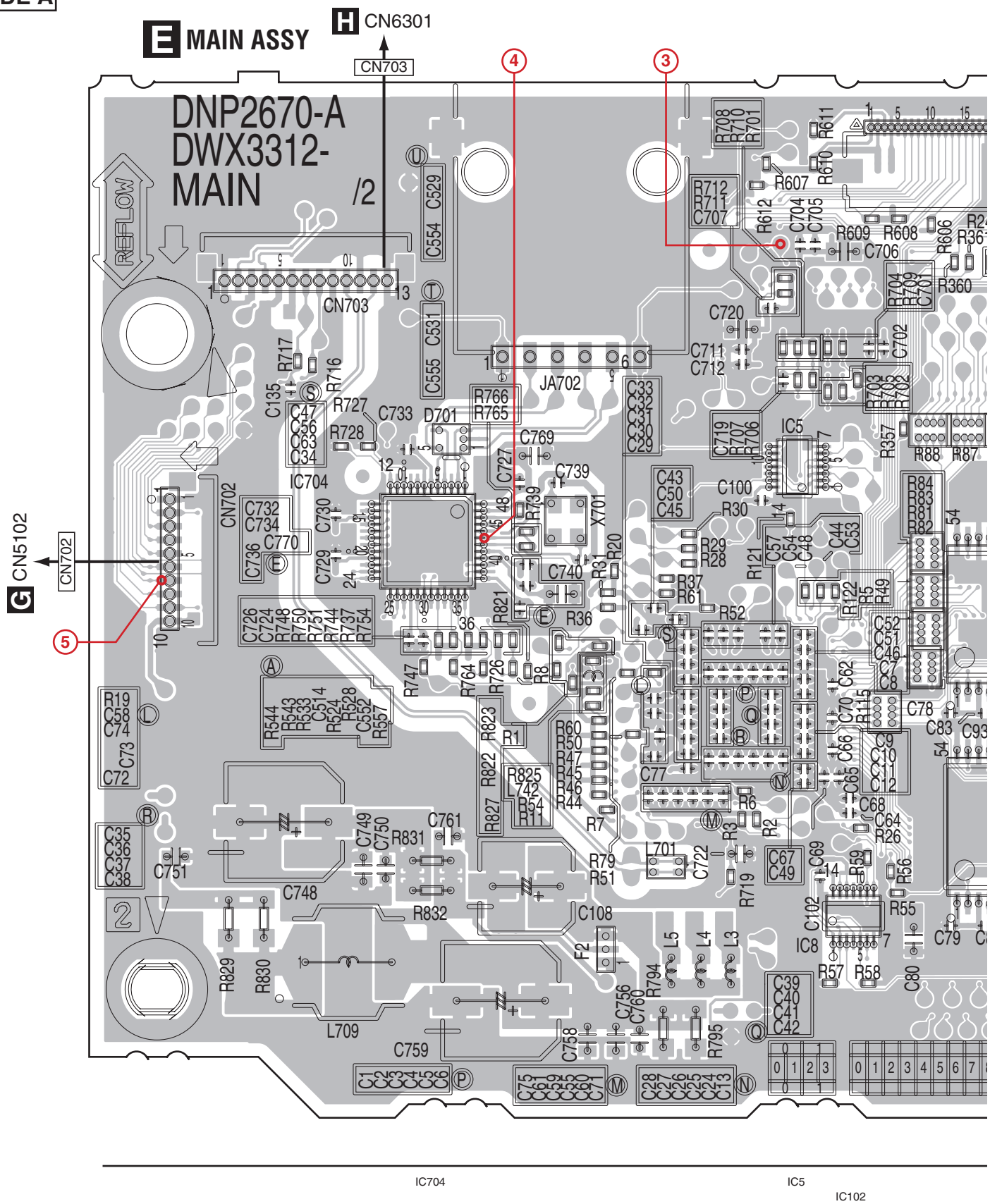

Downloaded from www.Manualslib.com manuals search engine

注意: ◯で囲まれた数字は各測定ポイントの番号を示します
NOTE: The encircled numbers denote measuring point.

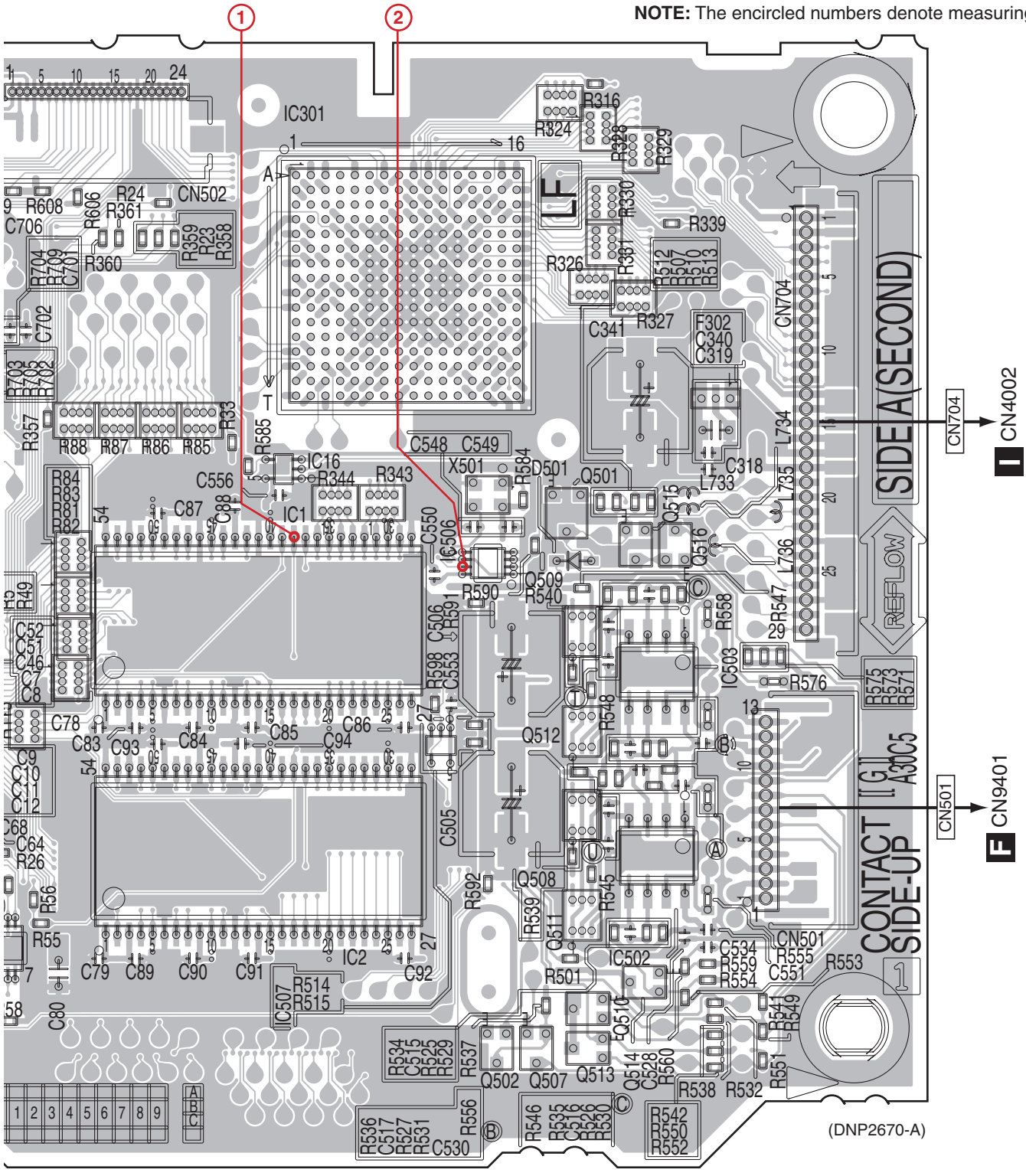

IC1 IC16 IC301 IC506 Q501 Q515 Q516
IC2 Q502 Q507-Q513 IC503
IC502

Downloaded from www.Manualslib.com manuals search engine

SIDE B

E MAIN ASSY

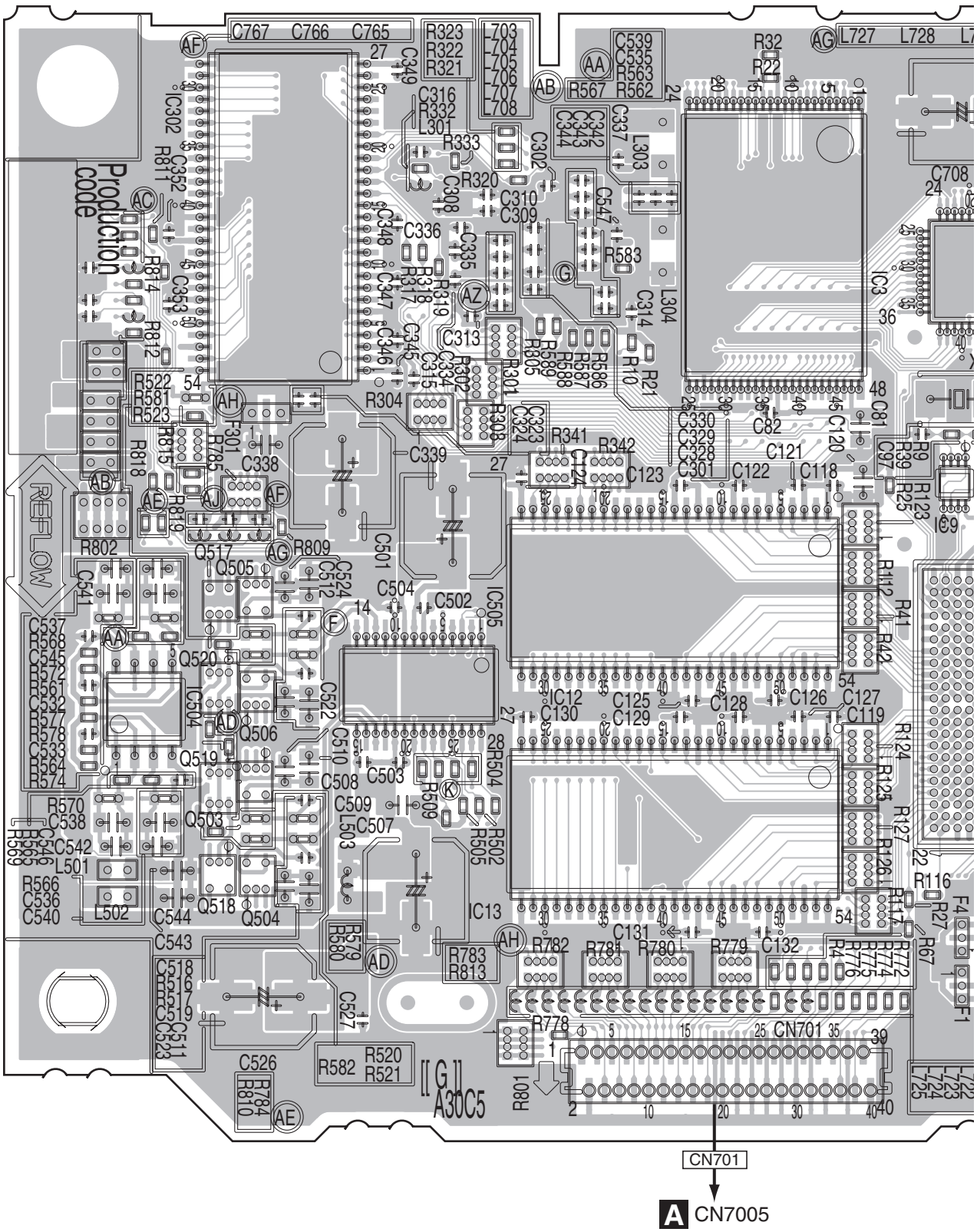

IC302
Q517 Q505
IC504 Q520 Q506
Q519 Q503
Q518 Q504
IC505
IC12
IC13
IC3
IC9

Downloaded from www.Manualslib.com manuals search engine

SIDE B

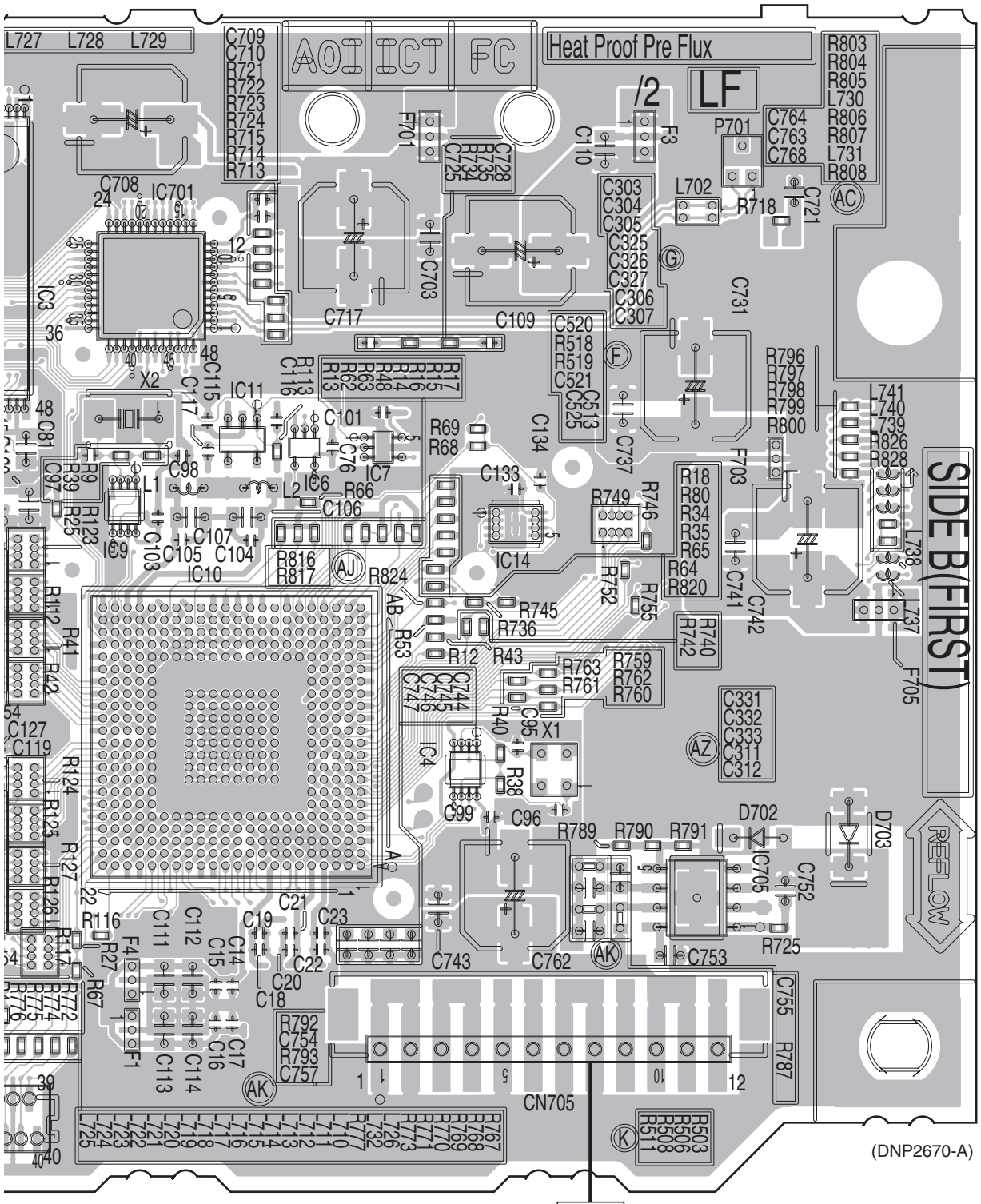

Downloaded from www.Manualslib.com manuals search engine

11.4 JACB, SDCB and USBB ASSYS

SIDE A

F JACB ASSY

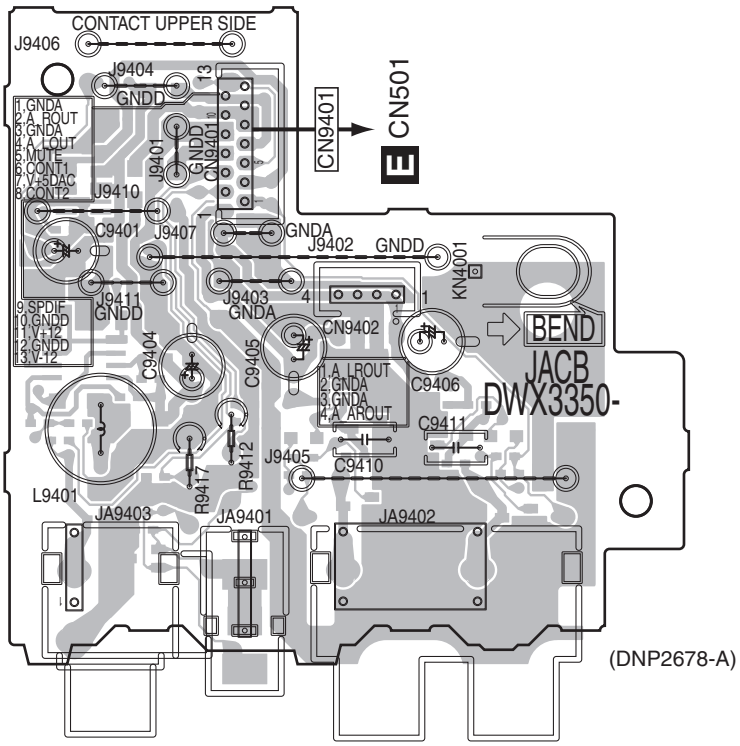

G SDCB ASSY

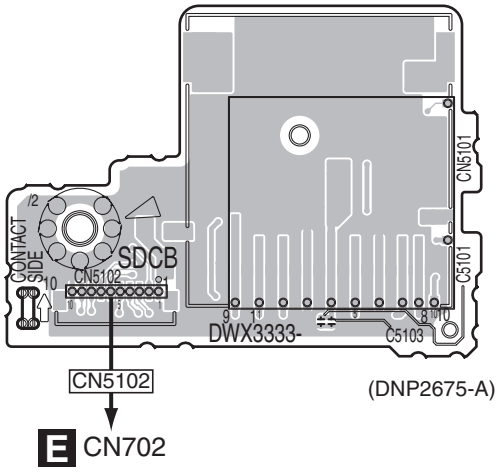

H USBB ASSY

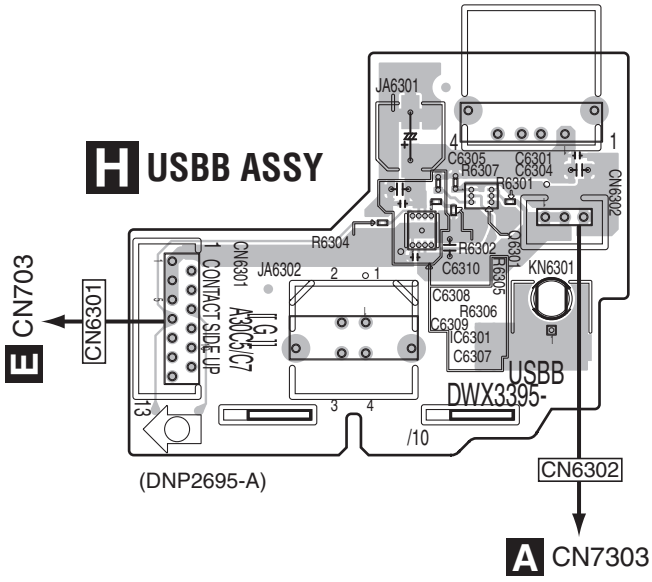

F G H

Downloaded from www.Manualslib.com manuals search engine

SIDE B

F JACB ASSY

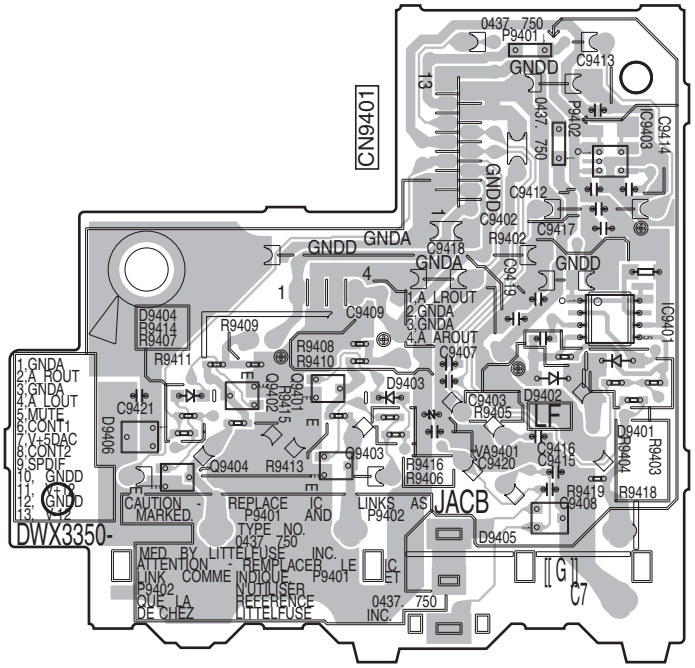

(DNP2678-A)

H USBB ASSY

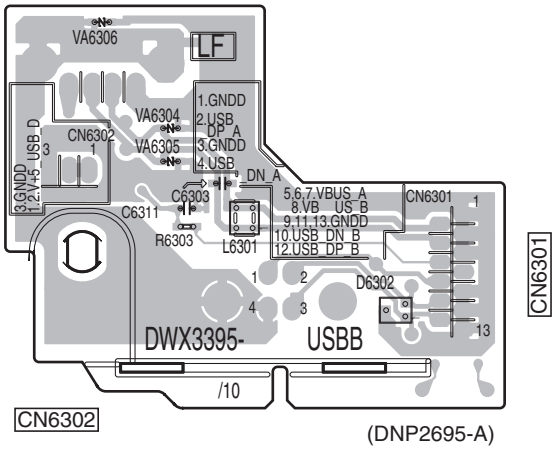

(DNP2695-A)

G SDCB ASSY

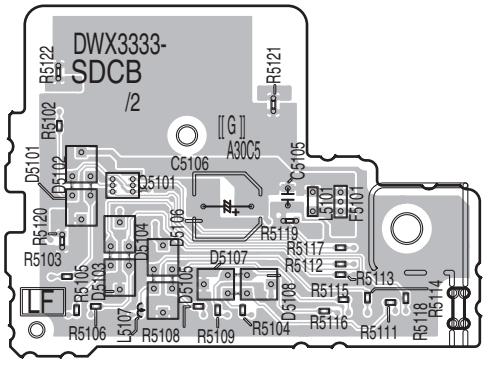

(DNP2675-A)

Downloaded from www.Manualslib.com manuals search engine

11.5 TFTB ASSY

SIDE A

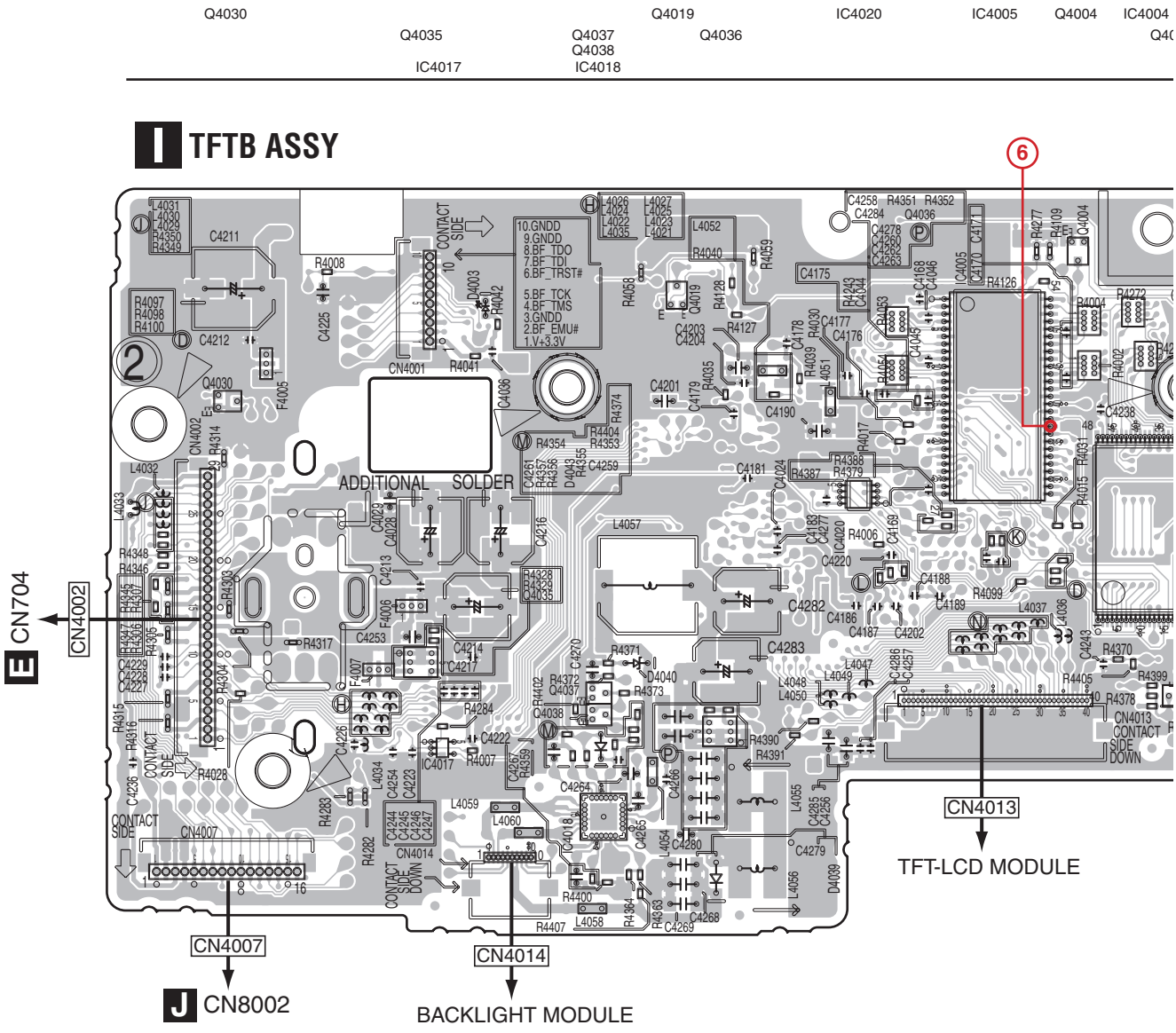

Downloaded from www.Manualslib.com manuals search engine

SIDE A

注意: ◯で囲まれた数字は各測定ポイントの番号を示します
NOTE: The encircled numbers denote measuring point.

Q4004 IC4004 Q4003 IC4019
Q4039 Q4002 Q4032 Q4040
Q4033 Q4018
Q4031 Q4041

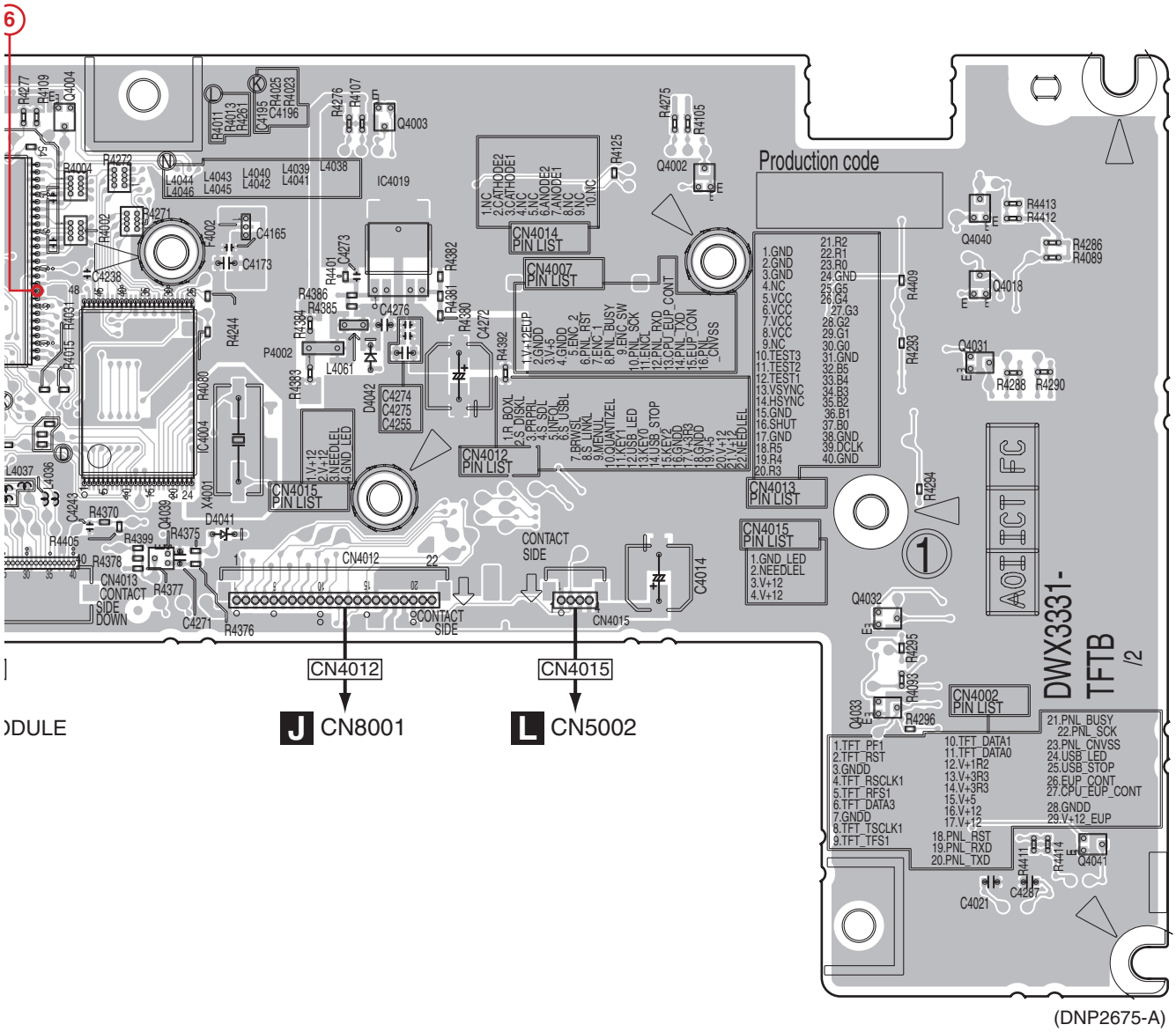

Downloaded from www.Manualslib.com manuals search engine

SIDE B

A

IC4003 IC4021

B

I TFTB ASSY

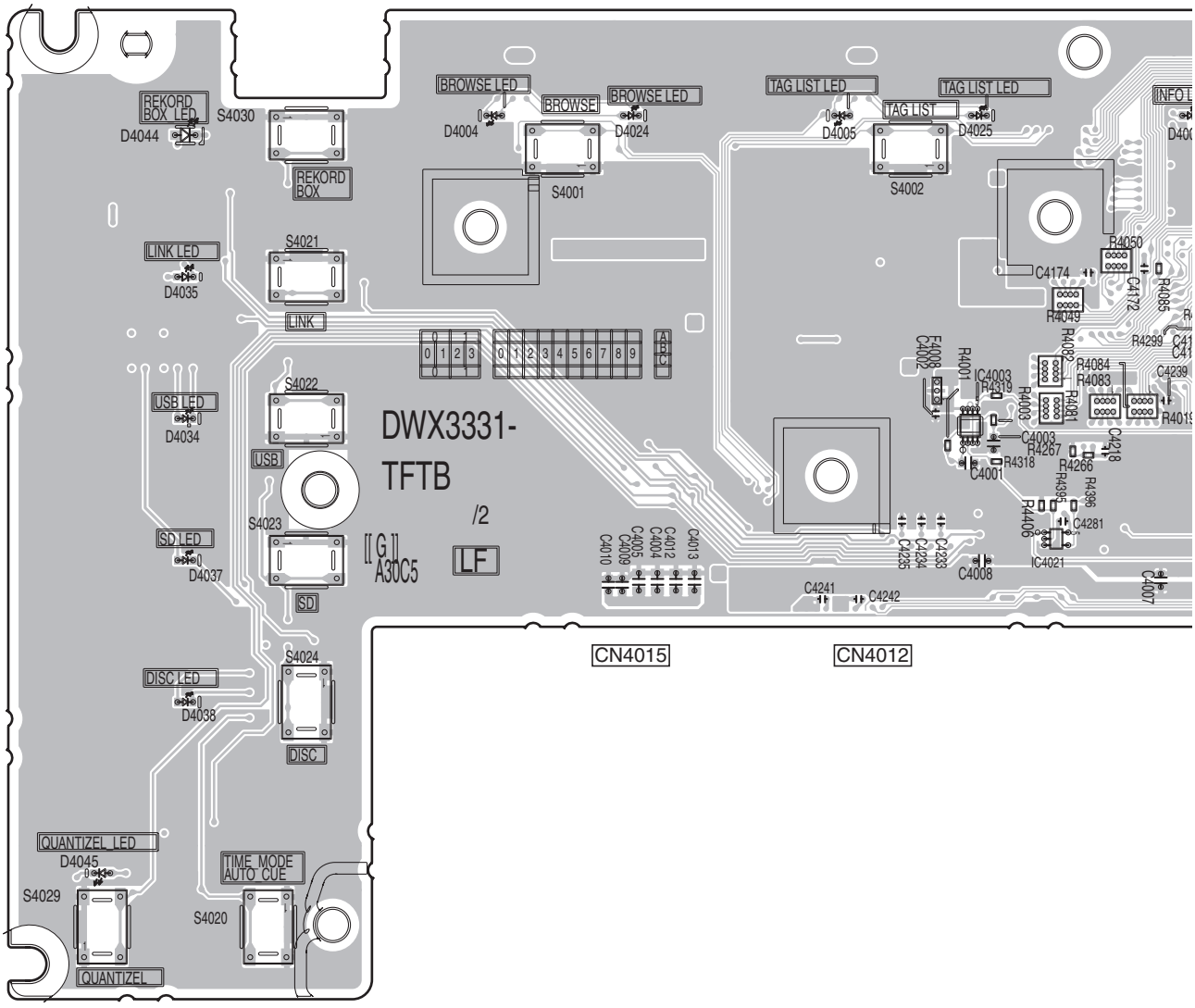

(DNP2675-A)

Downloaded from www.Manualslib.com manuals search engine

SIDE B

注意: ◯で囲まれた数字は各測定ポイントの番号を示します
NOTE: The encircled numbers denote measuring point.

C4021 IC4001 Q4001

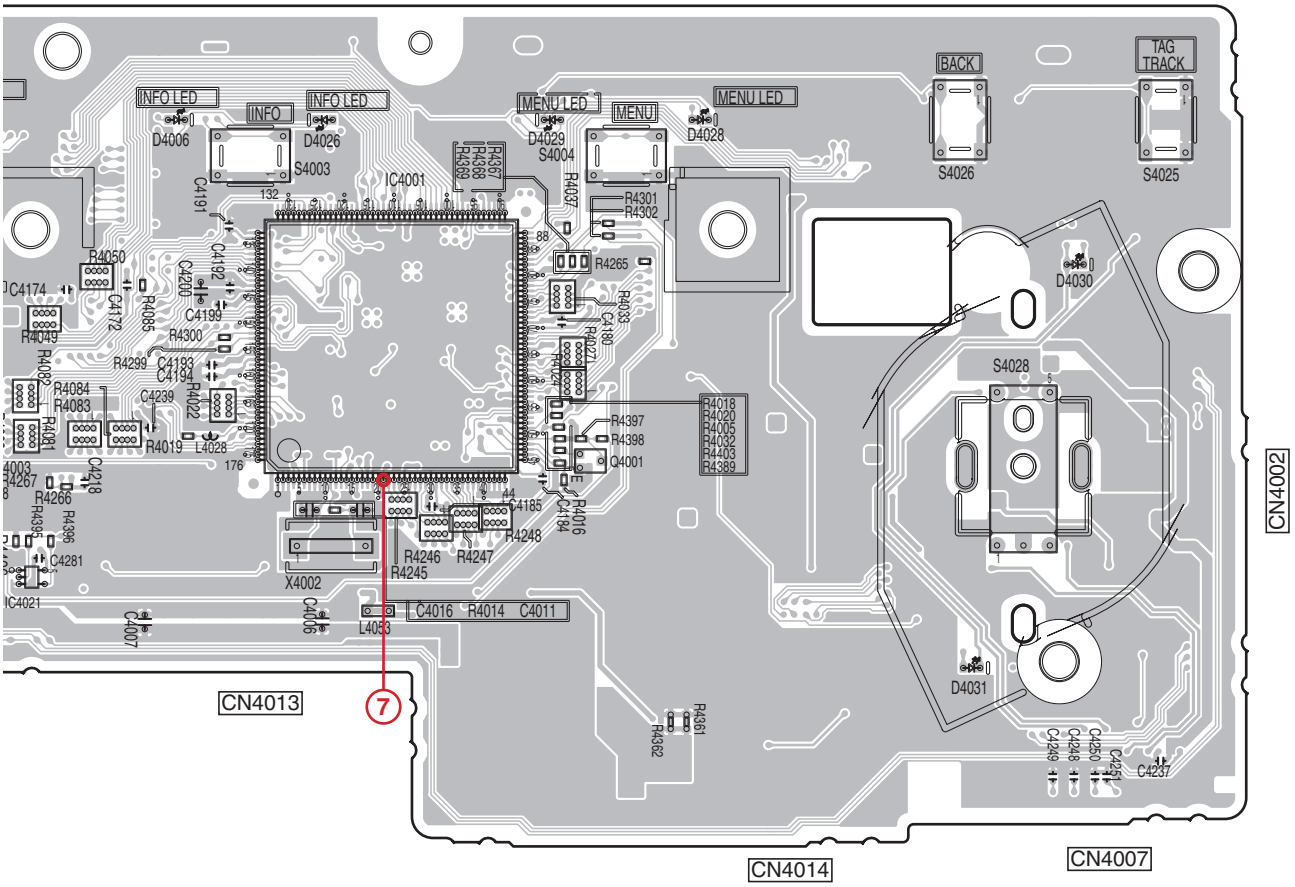

Downloaded from www.Manualslib.com manuals search engine

11.6 PNLB ASSY

SIDE A

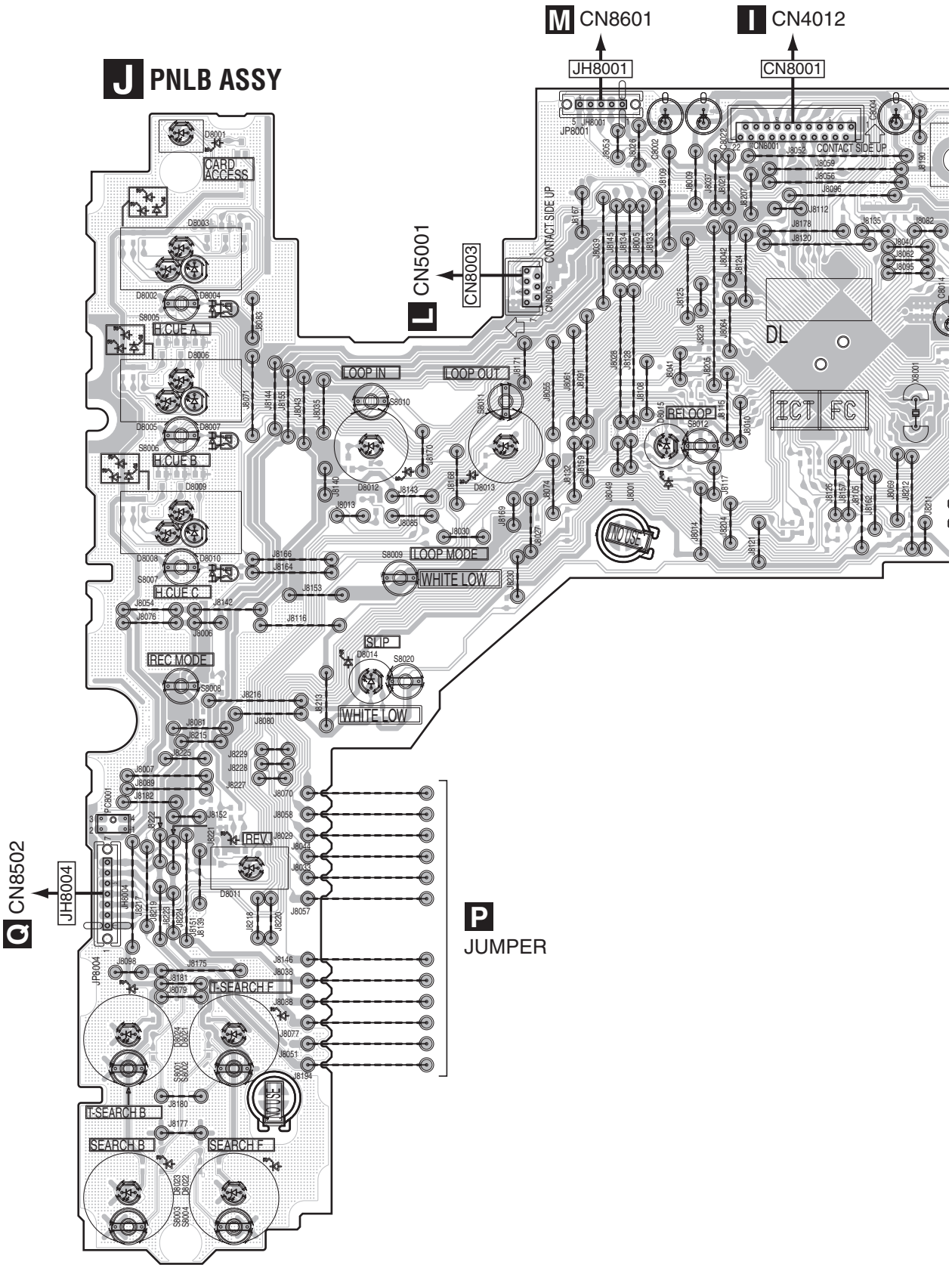

Downloaded from www.Manualslib.com manuals search engine

SIDE A

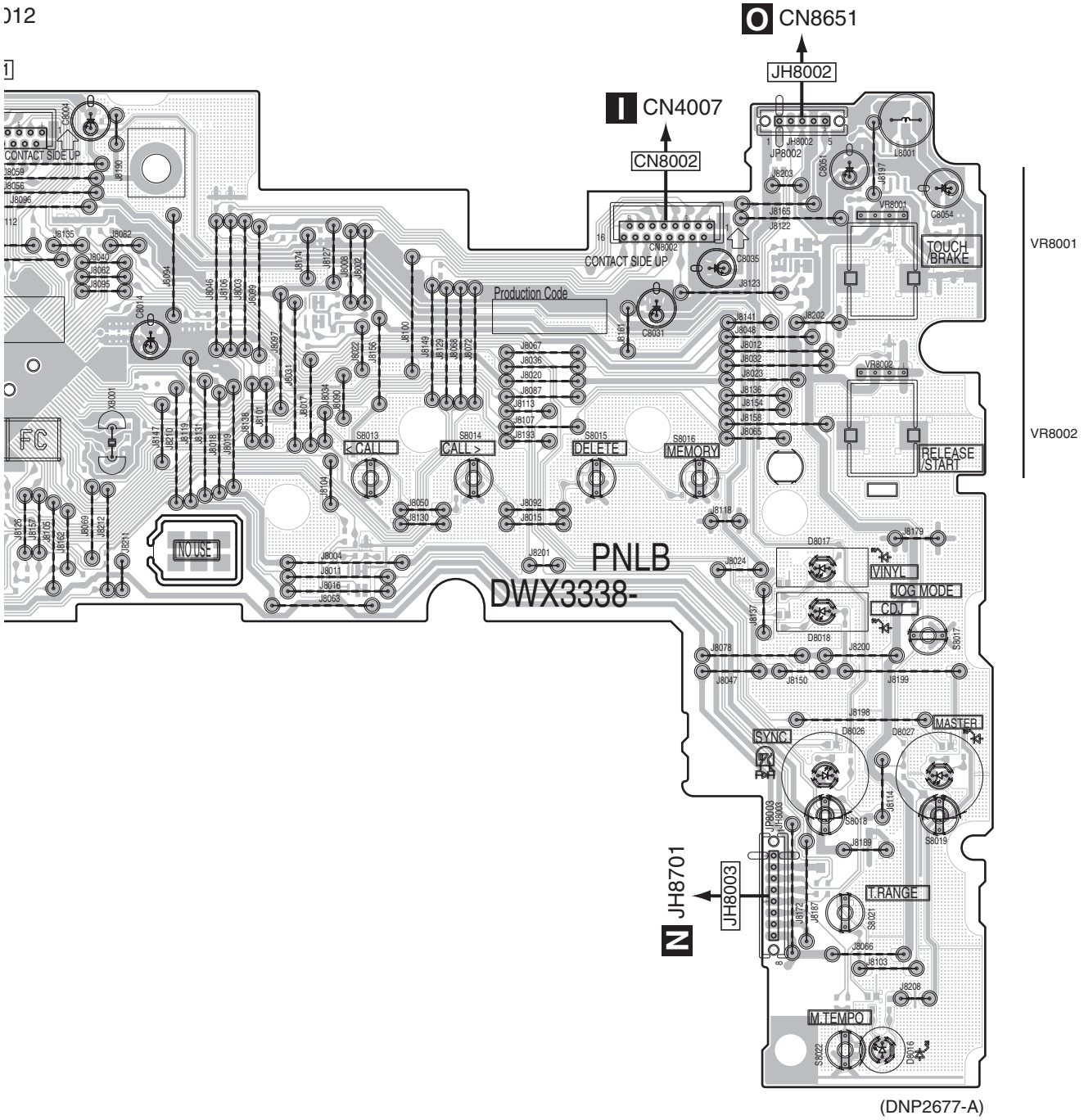

(DNP2677-A)

Downloaded from www.Manualslib.com manuals search engine

SIDE B

J PNLB ASSY

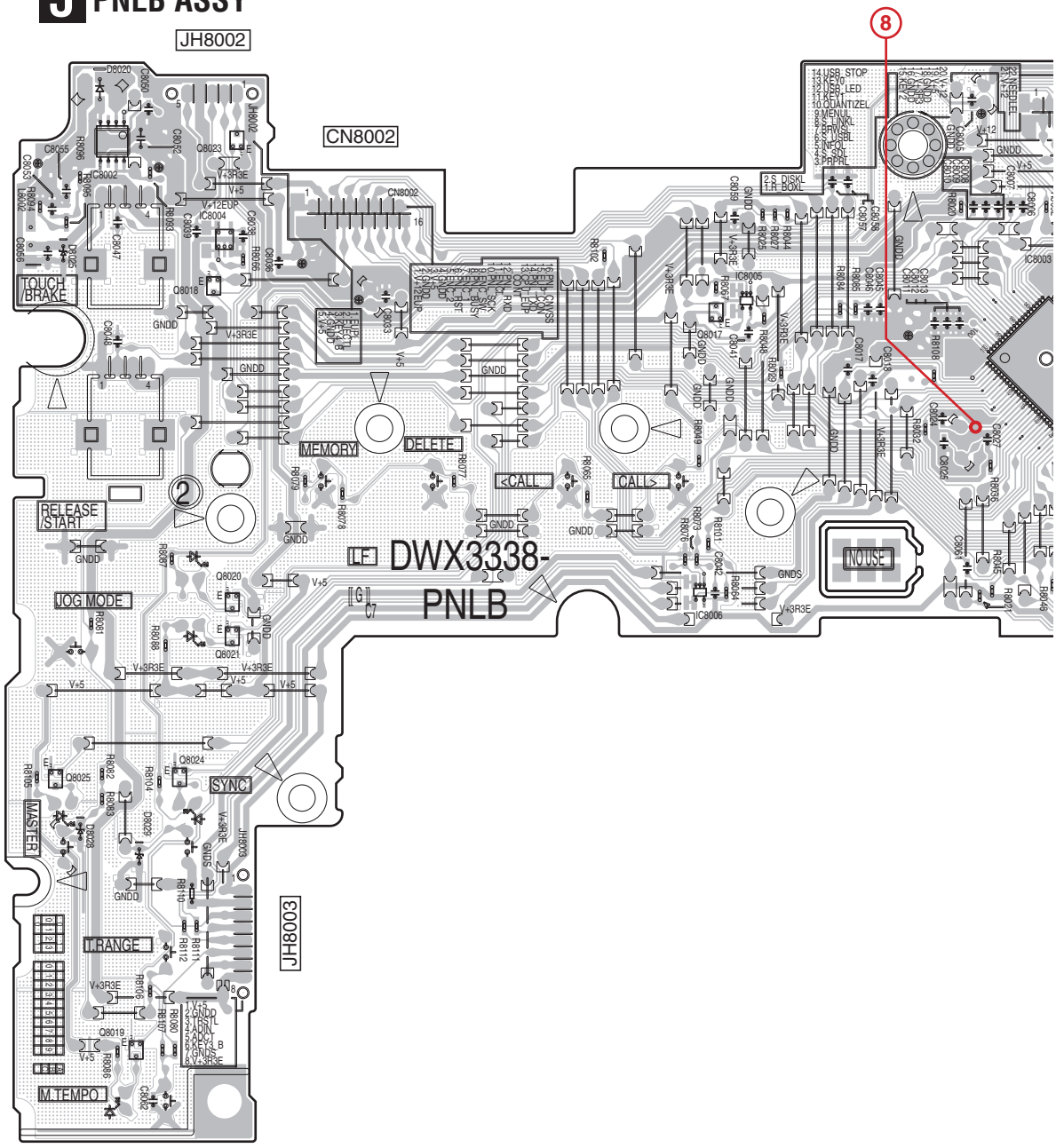

Downloaded from www.Manualslib.com manuals search engine

SIDE B

注意: ◯で囲まれた数字は各測定ポイントの番号を示します
NOTE: The encircled numbers denote measuring point.

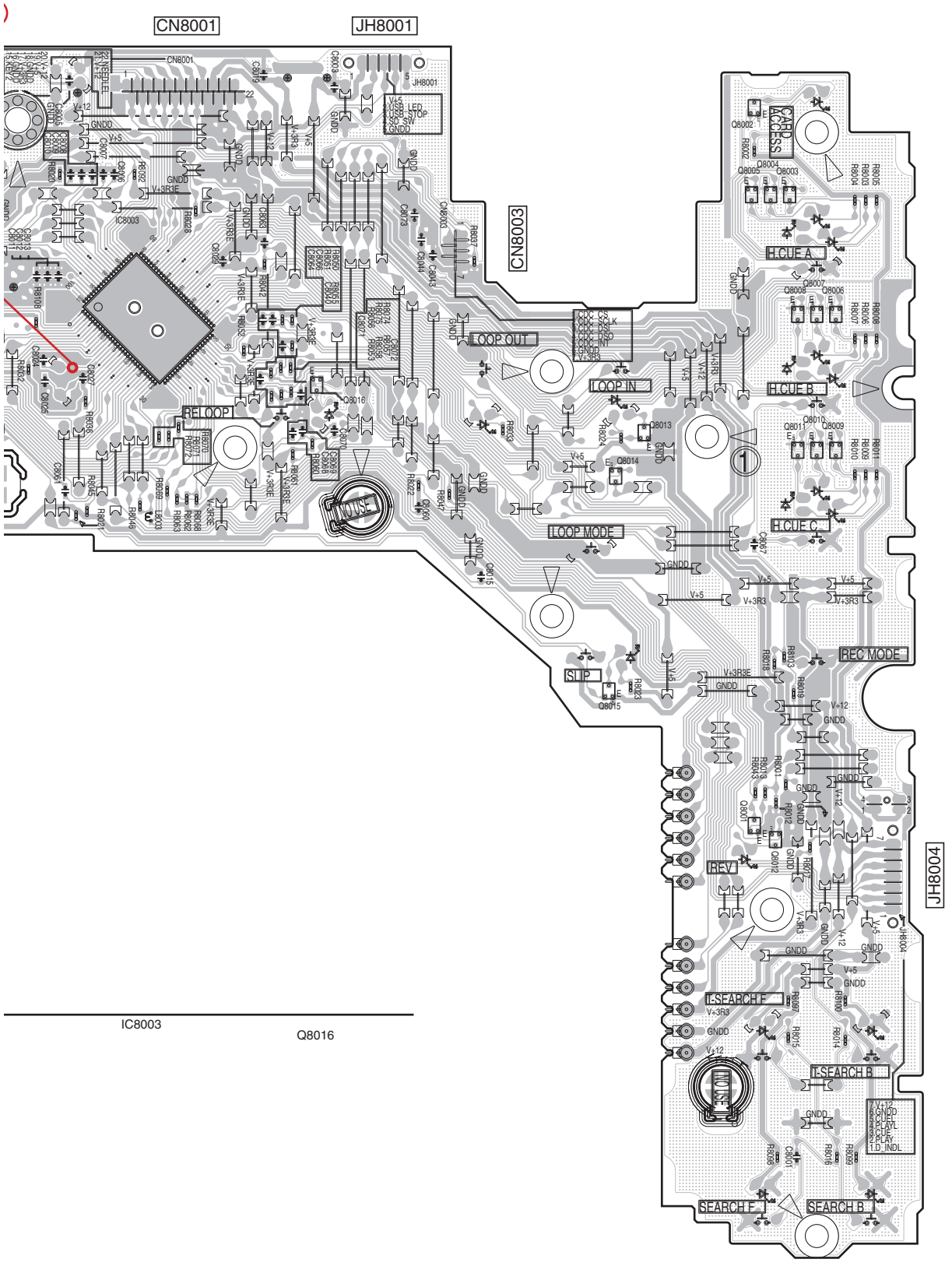

(DNP2677-A)

Downloaded from www.Manualslib.com manuals search engine

11.7 JFLB, CDCB and SDSW ASSYS

SIDE A

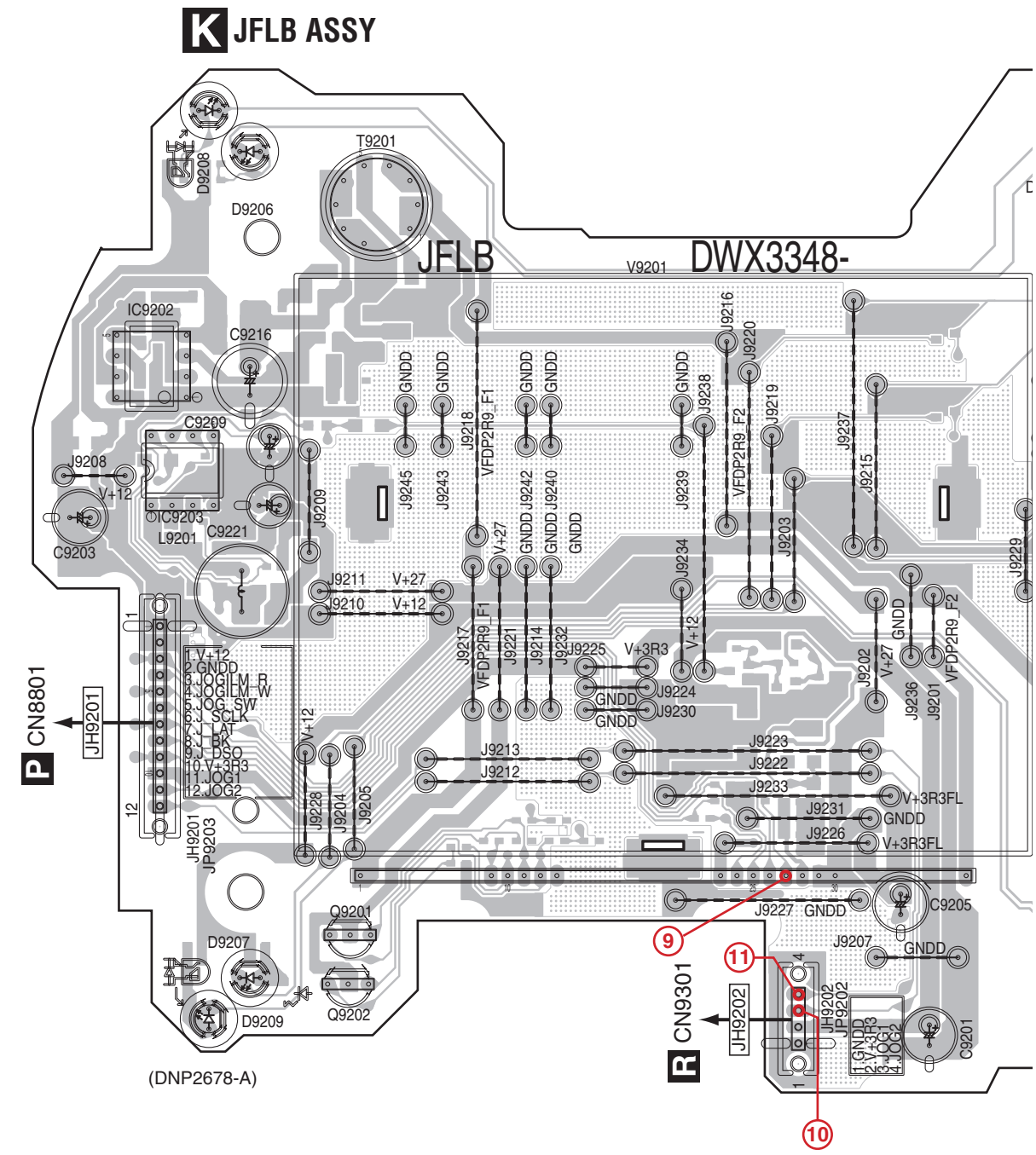

Downloaded from www.Manualslib.com manuals search engine

SIDE A

注意: ◯で囲まれた数字は各測定ポイントの番号を示します
NOTE: The encircled numbers denote measuring point.

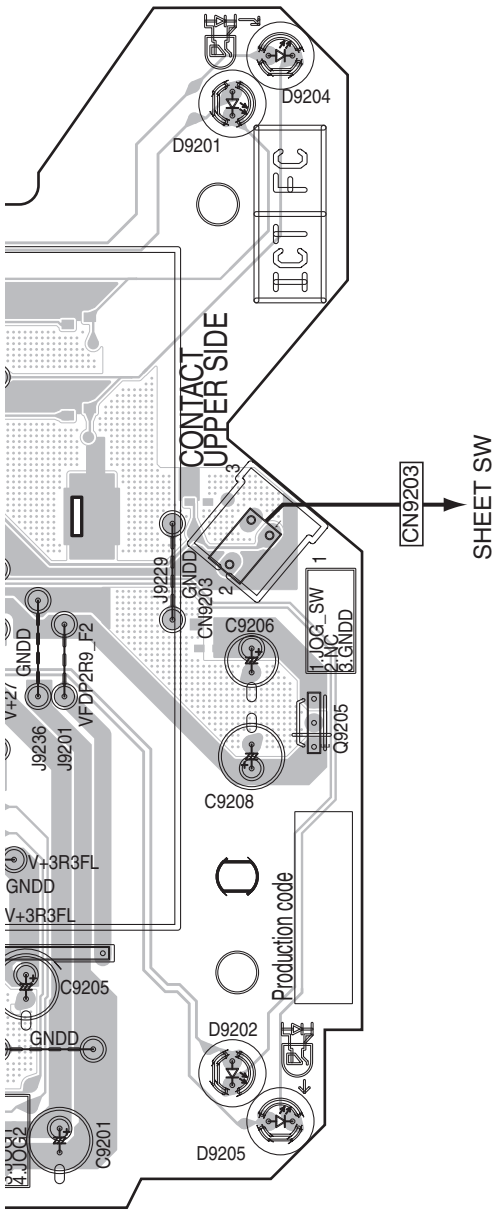

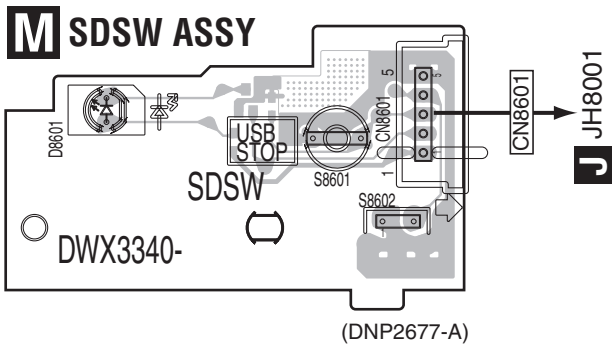

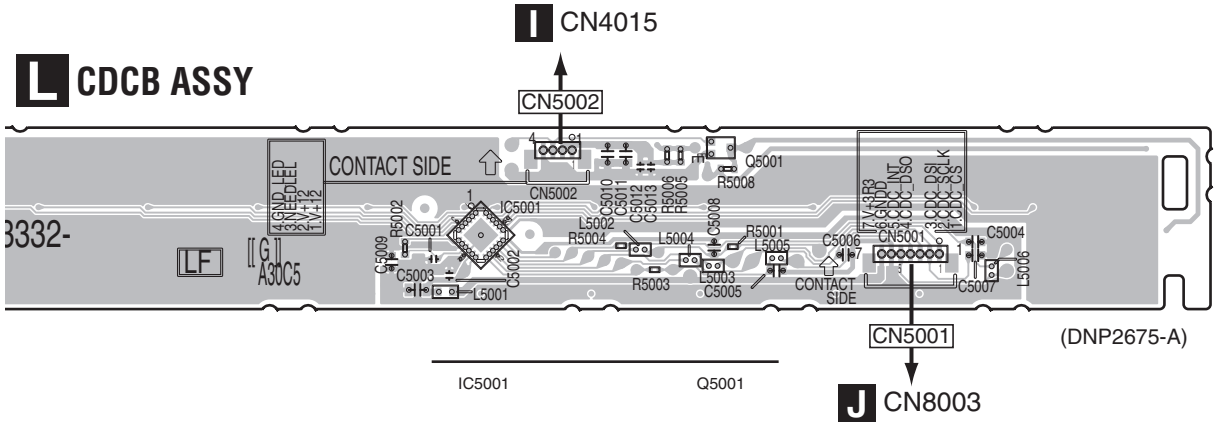

Downloaded from www.Manualslib.com manuals search engine

SIDE B

M SDSW ASSY

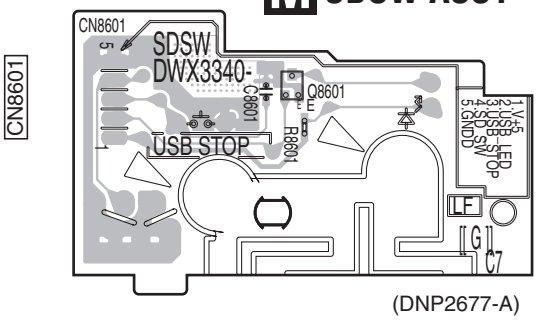

(DNP2677-A)

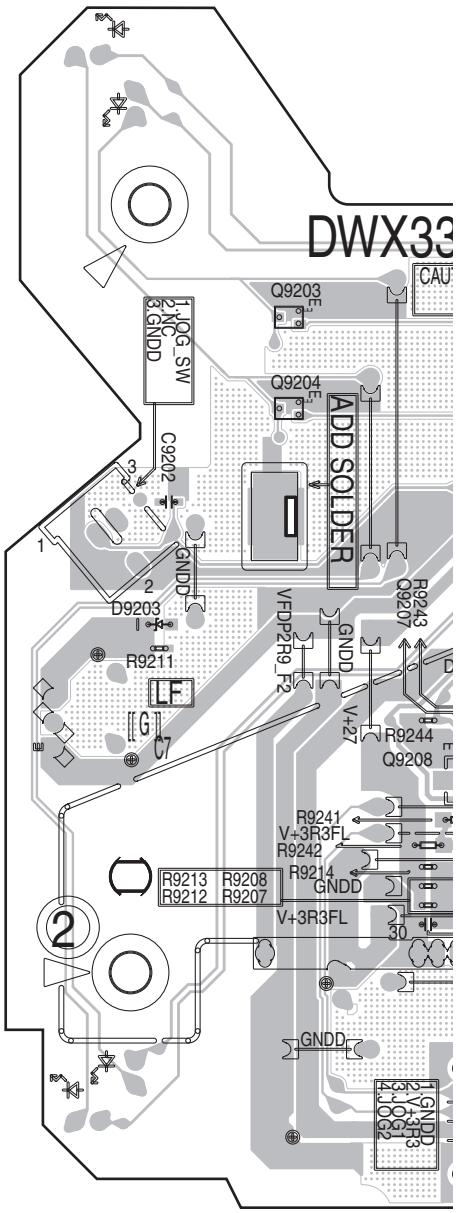

L CDCB ASSY

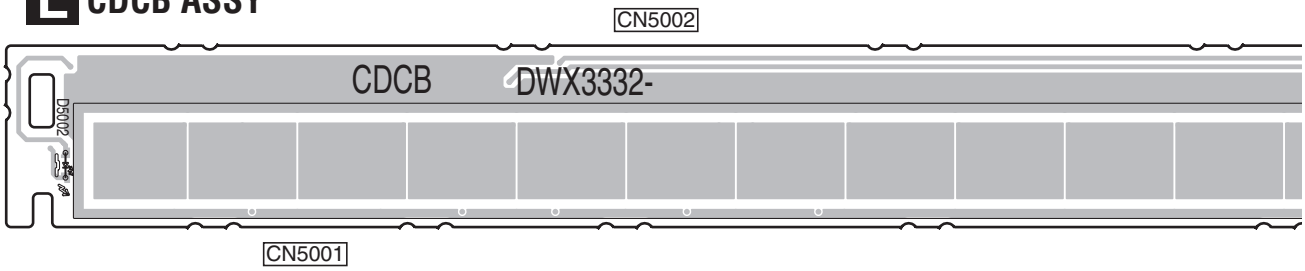

K L M

Downloaded from www.Manualslib.com manuals search engine

SIDE B

K JFLB ASSY

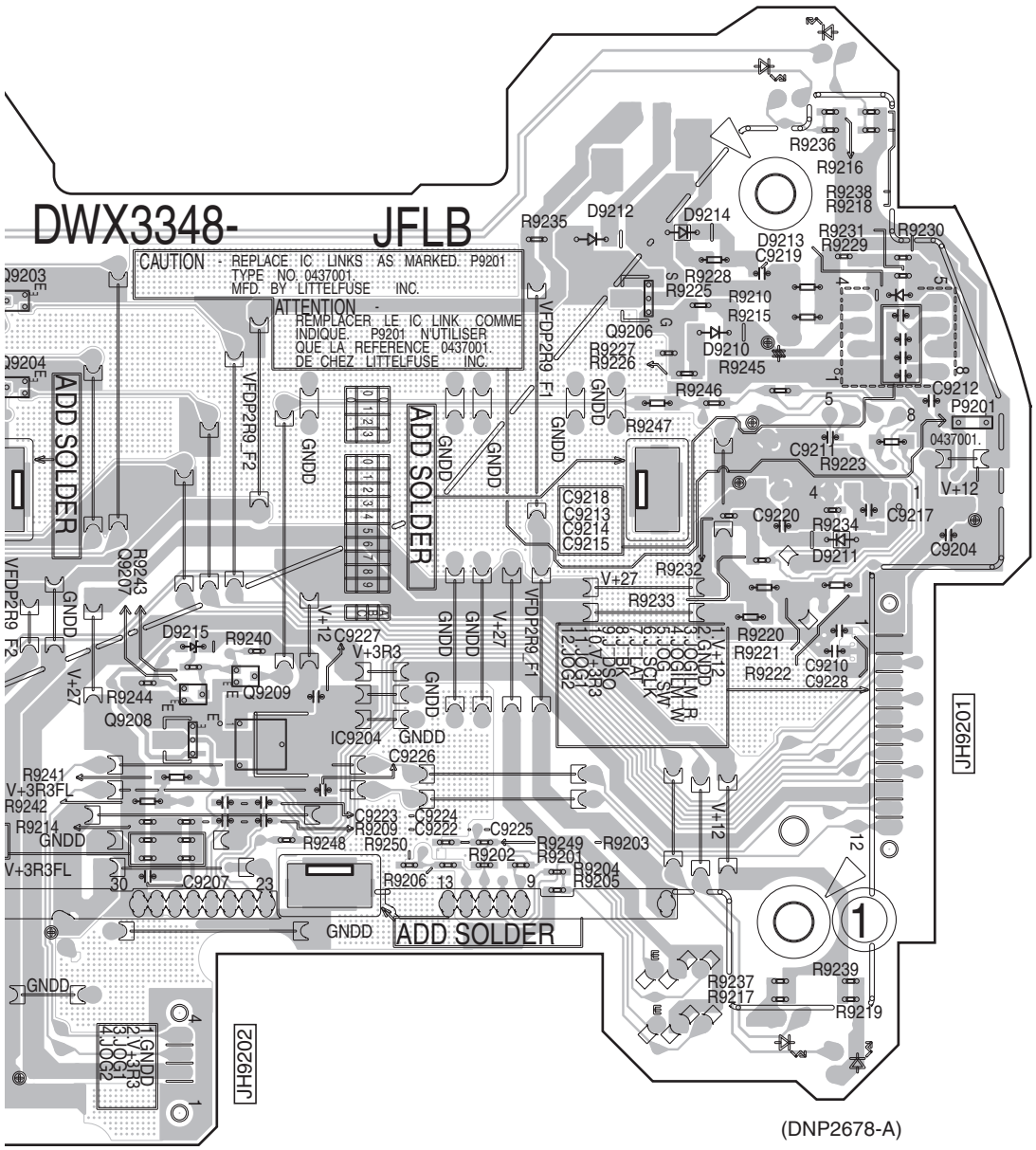

(DNP2678-A)

Q9203 Q9206

Q9204

Q9209

Q9207

Q9208

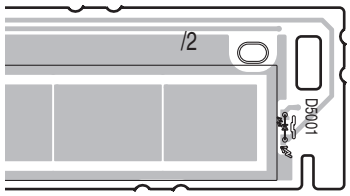

(DNP2675-A)

Downloaded from www.Manualslib.com manuals search engine

11.8 SLDB, EUPB and CNCT ASSYS

SIDE A

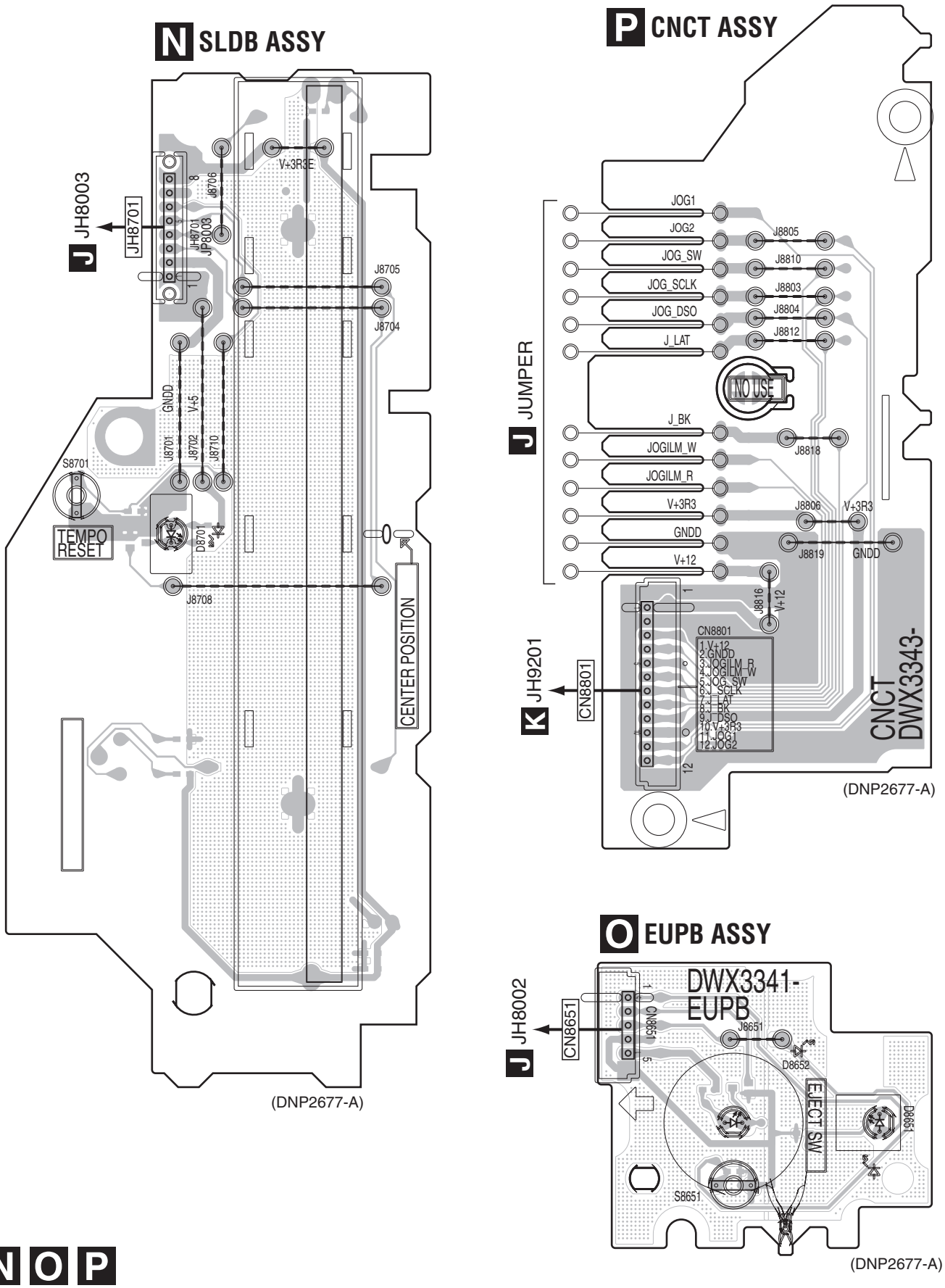

Downloaded from www.Manualslib.com manuals search engine

SIDE B

P CNCT ASSY

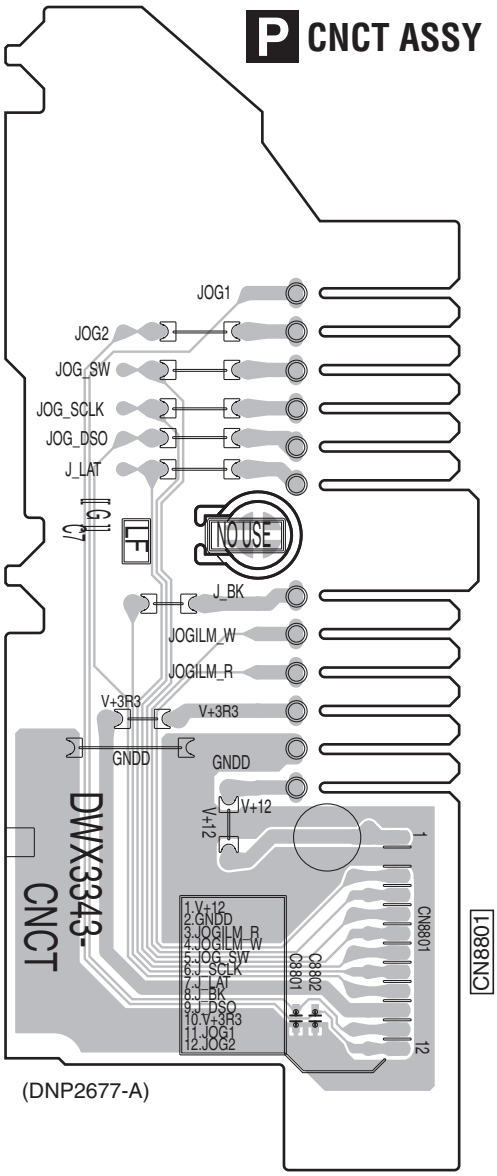

(DNP2677-A)

O EUPB ASSY

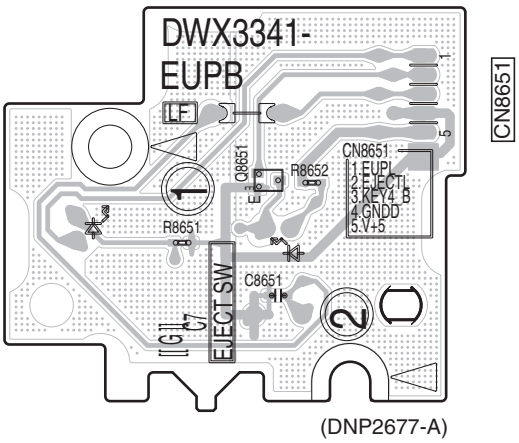

(DNP2677-A)

N SLDB ASSY

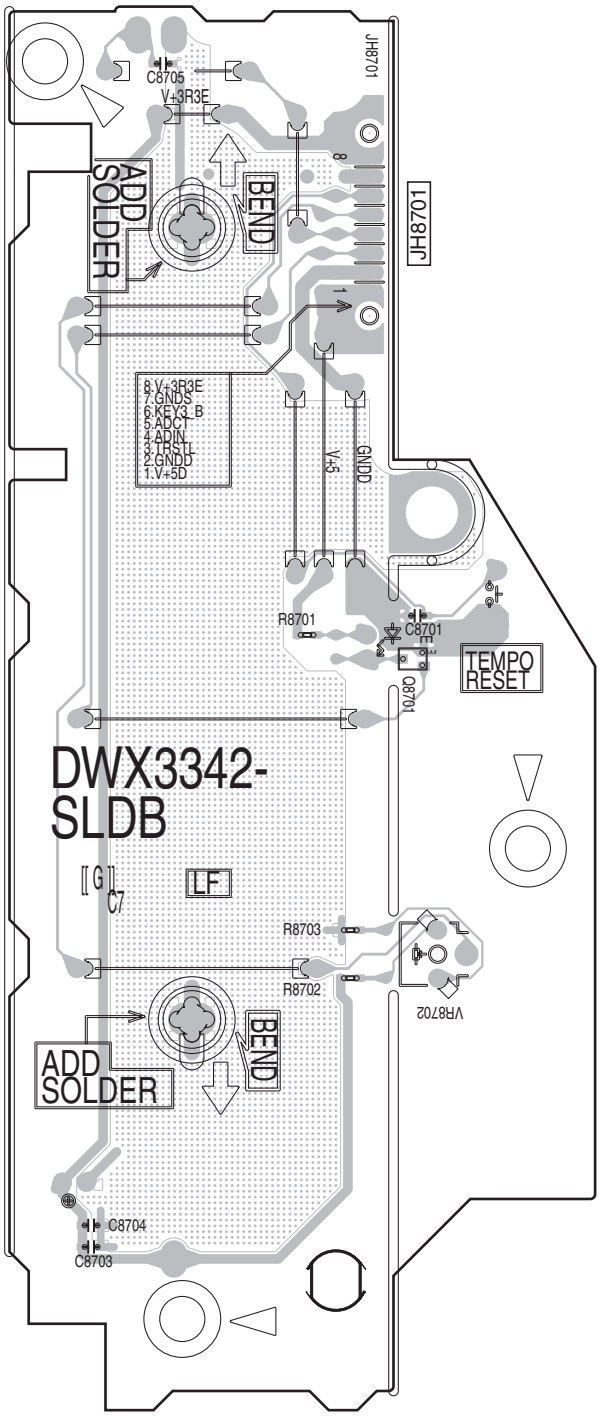

(DNP2677-A)

Downloaded from www.Manualslib.com manuals search engine

11.9 KSWB, JOGB and INDB ASSYS

SIDE A

Q KSWB ASSY

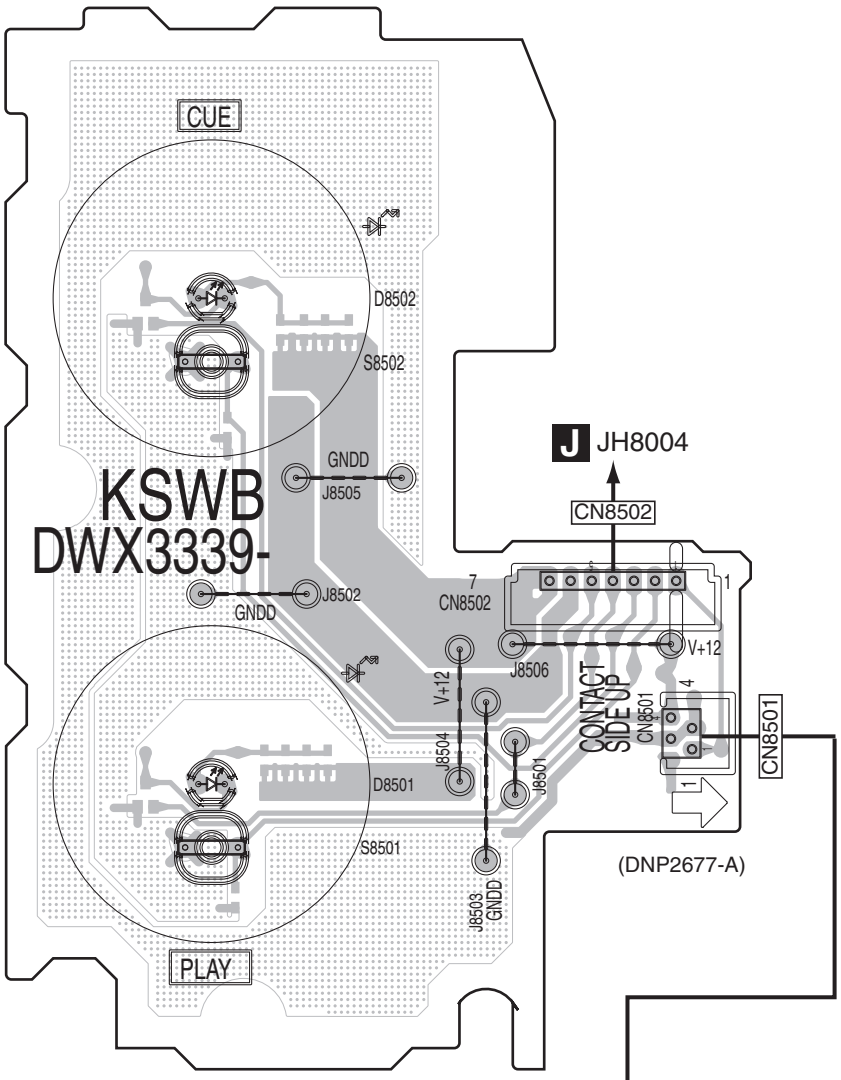

R JOGB ASSY

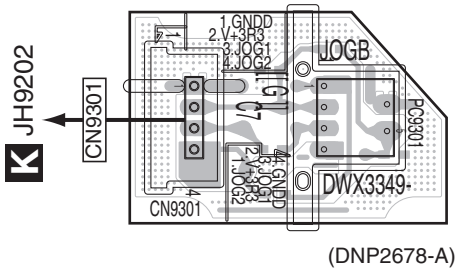

S INDB ASSY

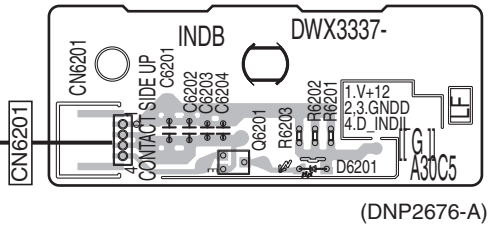

Downloaded from www.Manualslib.com manuals search engine

Q KSWB ASSY

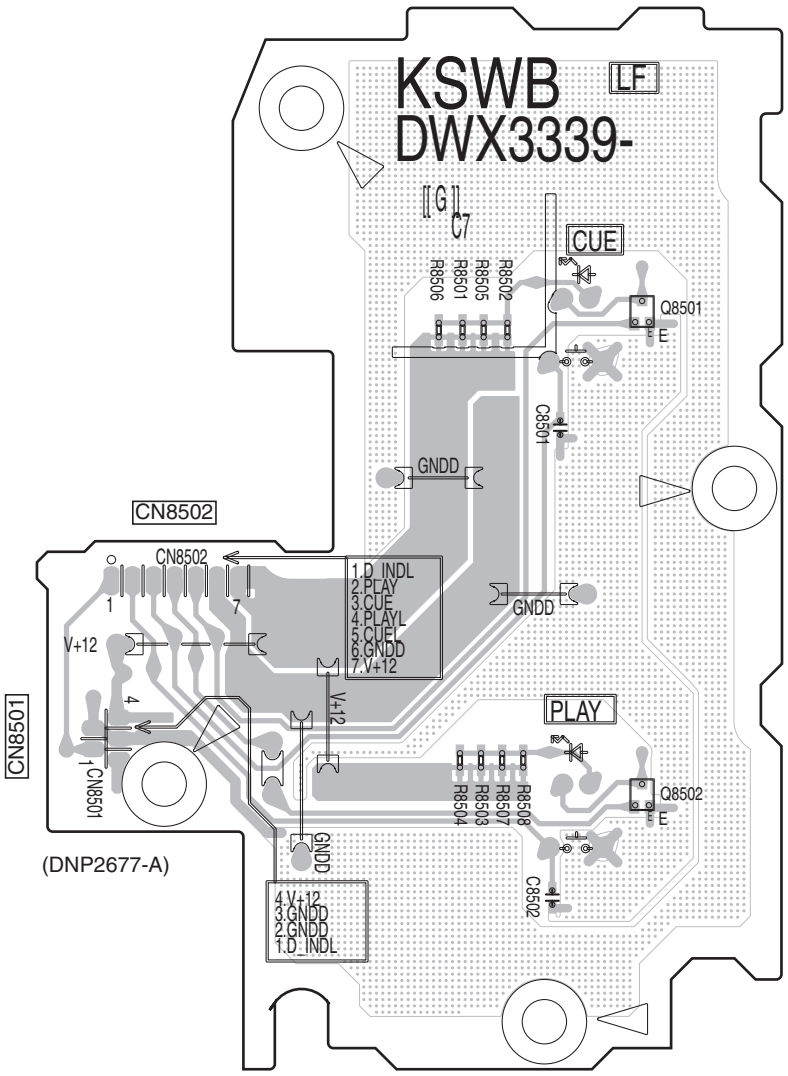

(DNP2677-A)

S INDB ASSY

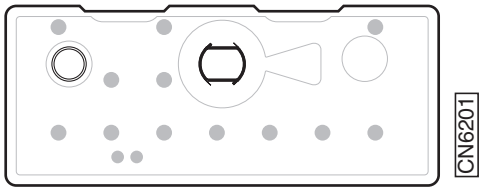

(DNP2676-A)

R JOGB ASSY

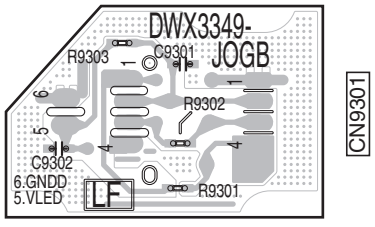

(DNP2678-A)

Downloaded from www.Manualslib.com manuals search engine

11.10 POWER SUPPLY and ACIN ASSYS

SIDE A

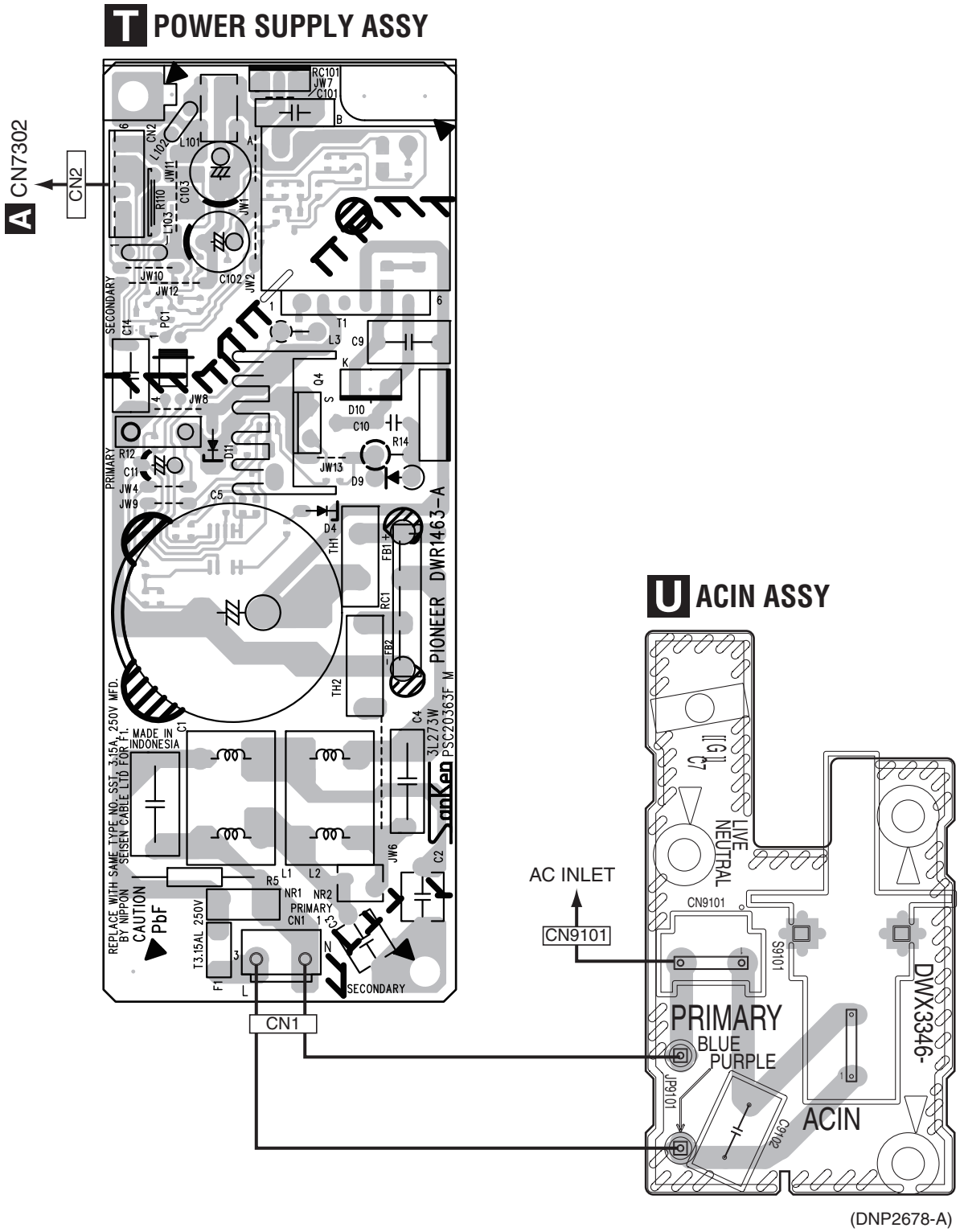

Downloaded from www.Manualslib.com manuals search engine

T POWER SUPPLY ASSY

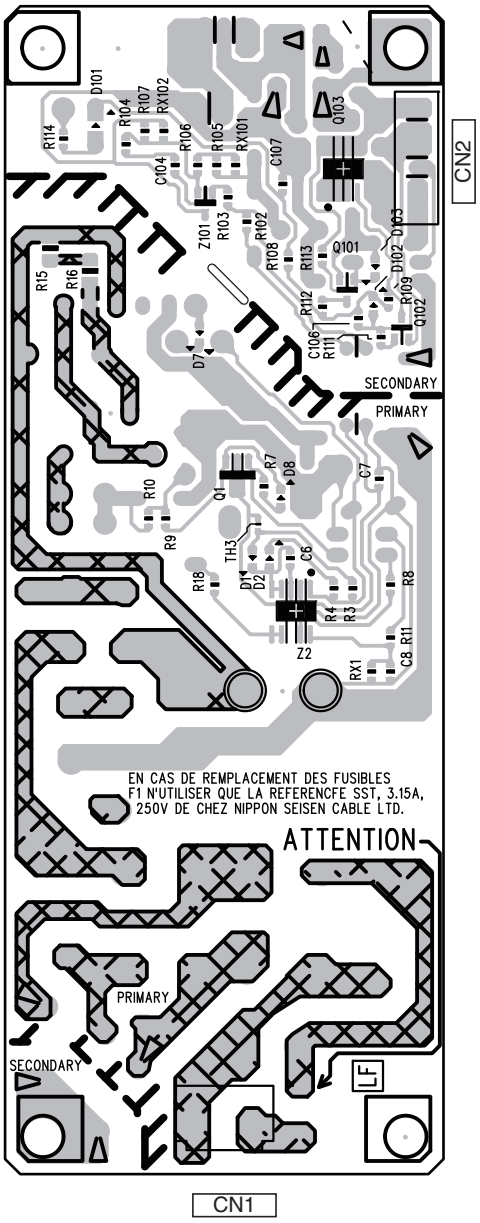

U ACIN ASSY

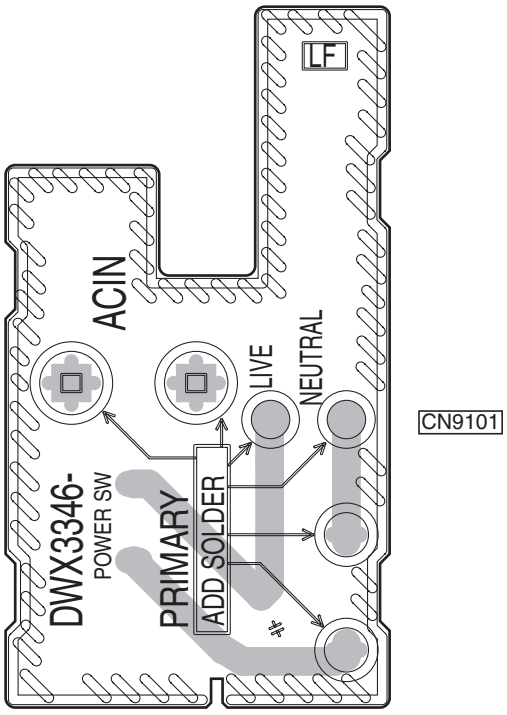

(DNP2678-A)

Downloaded from www.Manualslib.com manuals search engine

12. PCB PARTS LIST

NOTES: ● *Parts marked by "NSP" are generally unavailable because they are not in our Master Spare Parts List.*

● *The ⚠ mark found on some component parts indicates the importance of the safety factor of the part. Therefore, when replacing, be sure to use parts of identical designation.*

● *When ordering resistors, first convert resistance values into code form as shown in the following examples.*

Ex.1 When there are 2 effective digits (any digit apart from 0), such as 560 ohm and 47 k ohm (tolerance is shown by J = 5%, and K = 10%).

560 Ω → 56 × 10¹ → 561 ····· RD1/4PU 5 6 1 J
47 kΩ → 47 × 10³ → 473 ····· RD1/4PU 4 7 3 J
0.5 Ω → R50 ····· RN2H R 5 0 K
1 Ω → 1R0 ····· RS1P 1 R 0 K

Ex.2 When there are 3 effective digits (such as in high precision metal film resistors).

5.62 kΩ → 562 × 10¹ → 5621 ····· RN1/4PC 5 6 2 1 F

● *Meaning of the figures and others in the parentheses in the parts list.*

Example) IC 301 is on the point (face A, 91 of x-axis, and 111 of y-axis) of the corresponding PC board.
IC 301 (A, 91, 111) IC NJM2068V

LIST OF ASSEMBLIES

Mark	No.	Description	Part No.
	1	MAIN ASSY	DWX3312
NSP	1	TFTA ASSY	DWM2458
	2	TFTB ASSY	DWX3331
	2	CDCB ASSY	DWX3332
	2	SDCB ASSY	DWX3333
NSP	1	SRVA ASSY	DWM2459
	2	SRVB ASSY	DWX3334
	2	INSW ASSY	DWX3335
	2	SPCN ASSY	DWX3336
	2	INDB ASSY	DWX3337
NSP	1	PNLA ASSY	DWM2460
	2	PNLB ASSY	DWX3338
	2	KSWB ASSY	DWX3339
	2	SDSW ASSY	DWX3340
	2	EUPB ASSY	DWX3341
	2	SLDB ASSY	DWX3342
NSP	2	CNCT ASSY	DWX3343
NSP	1	JFLA ASSY	DWM2461
	2	SLMB ASSY	DWX3345
	2	ACIN ASSY	DWX3346
	2	JFLB ASSY	DWX3348
	2	JOGB ASSY	DWX3349
	2	JACB ASSY	DWX3350
	1	USBB ASSY	DWX3395
⚠	1	POWER SUPPLY ASSY	DWR1463

Mark	No.	Description	Part No.
A		**SRVB ASSY**	
		SEMICONDUCTORS	
	IC	7001	BD7956FS
	IC	7002	AN22022A
⚠	IC	7003	MM1478DFBE
	IC	7004	DYW1816
⚠	IC	7005	S-1155B15-U5
	IC	7006	MN103S71F
	IC	7007	TC74VHC4066AFK
	IC	7008	TC74VHC4052AFK
⚠	IC	7010	NJM2845DL1-05
⚠	IC	7301,7302,7305	BD9328EFJ
	Q	7001,7002	2SA1577
	Q	7003,7004	LTC114YUB
	Q	7005	UM5K1N
	D	7001,7002	1SR154-400
		MISCELLANEOUS	
	L	7011-7028,7031-7038 INDUCTOR	CTF1379
	L	7302 SMD SPL INDUCTOR	CTH1527
	L	7303 CHOKE COIL	CTH1394
	L	7305 INDUCTOR	CTH1253
	KN	7001,7002 WRAPPING TERMINAL	CKF1089
	X	7001 CERAMIC RESONATOR (16.9344 MHz)	DSS1157
	CN	7001 24P FFC CONNECTOR	DKN1445
	CN	7003 CONNECTOR	AKM1291
	CN	7004 4P CONNECTOR	DKN1288
	CN	7005 40P CONNECTOR	VKN1818
	CN	7009 CONNECTOR	DKN1313
	CN	7301 CONNECTOR	AKM1298
	CN	7302 XH CONNECTOR (6P)	DKN1599
	CN	7303 CONNECTOR	AKM1289
⚠	P	7001 PROTECTOR (2.000 A)	DEK1126
⚠	P	7003 PROTECTOR (0.750 A)	DEK1121
⚠	P	7302 PROTECTOR (1.250 A)	DEK1123
		RESISTORS	
	R	7001,7110	RS1/10SR4701F
	R	7003,7006,7009	DCN1143
	R	7007	RS1/4SA120J
	R	7008	RS1/4SA220J
	R	7014,7015	RS1/4SA2R0J
	R	7017,7109	RS1/10SR2702F
	R	7018,7024,7025,7099	RS1/10SR1502F
	R	7020,7117,7118	RS1/10SR1202F
	R	7021	RS1/10SR3302F
	R	7042,7043,7063-7066	RAB4CQ101J
	R	7057	RAB4CQ103J
	R	7088,7096,7302,7309	RS1/4SA0R0J
	R	7112,7334	RS1/10SR1002F
	R	7310	RS1/10SR2702D

Downloaded from www.Manualslib.com manuals search engine

Mark	No.	Description	Part No.
	R	7312,7318	RS1/10SR1002D
	R	7313	RS1/10SR4702D
	R	7315	RS1/10SR1100D
	R	7319,7320,7329	RS1/4SA0R0J
	R	7333	RS1/10SR4702F
		Other Resistors	RS1/10SR###J

CAPACITORS

	C	7001,7002,7081	CKSRYB472K50
	C	7008,7014-7016,7021	CKSRYB104K16
	C	7010,7024,7070,7098	CKSRYB103K50
	C	7011,7012,7034,7061	CCSRCH101J50
	C	7013	CKSRYB224K16
	C	7017	CCSRCH470J50
	C	7018,7019	CKSRYB474K10
	C	7020,7022	CEHVAW470M6R3
	C	7023,7025-7030,7035	CKSRYB104K16
	C	7031,7050,7121,7126	CCH1565
	C	7036,7037,7076,7078	CKSRYB182K50
	C	7038,7053,7079,7087	CKSRYB102K50
	C	7039,7056	CCSRCH151J50
	C	7040,7045-7048,7051	CKSRYB104K16
	C	7041	CKSRYB561K50
	C	7042,7090	CKSRYB273K25
	C	7043,7104,7312	CKSRYB473K50
	C	7044,7055,7110	CEHVW470M16
	C	7049,7069,7075,7085	CKSRYB105K10
	C	7052,7054,7057,7058	CKSRYB104K16
	C	7059	CEHVW470M6R3
	C	7060,7063-7068,7071	CKSRYB104K16
	C	7062,7089,7108	CCSRCH101J50
	C	7072,7080,7082,7084	CKSRYB104K16
	C	7073,7074	CKSRYB471K50
	C	7077	CKSRYB222K50
	C	7083	CKSRYB122K50
	C	7086,7091,7094,7095	CKSRYB104K16
	C	7088,7092,7097	CKSRYB102K50
	C	7096	CKSRYB105K10
	C	7099-7102,7109,7114	CKSRYB104K16
	C	7103	CKSRYB333K50
	C	7111-7113,7115	CKSRYB102K50
	C	7116-7120,7122-7125	CCSRCH101J50
	C	7127,7128,7133,7142	CKSRYB104K16
	C	7129-7131,7134-7137	CCSRCH101J50
	C	7132,7324,7345,7353	CCH1565
	C	7139-7141	CCSRCH221J50
	C	7302,7304,7309,7311	CCG1221
	C	7303,7306,7313,7336	CCSRCH102J50
	C	7305	CCSRCH101J50
	C	7310,7323,7338,7339	CKSRYB103K50
	C	7316	CKSRYB183K50
	C	7318,7329,7334,7335	CCG1221
	C	7319,7321	CKSRYB104K50
	C	7320,7328,7332,7347	CKSRYB104K16
	C	7341	CKSRYB223K50
	C	7342	CCG1221
	C	7359	CFHXSP104J16
	C	7360	CFHXSQ472J16

Mark	No.	Description	Part No.

B SPCN ASSY

MISCELLANEOUS

	CN	6101 CONNECTOR	DKN1313
	CN	6102 CONNECTOR	DKN1312
	CN	6103 CONNECTOR	VKN1940

C INSW ASSY

MISCELLANEOUS

	S	6001 SPRING SWITCH	CSN1031
	CN	6001 CONNECTOR	VKN1940

D SLMB ASSY

MISCELLANEOUS

	S	9001,9002 PUSH SWITCH	DSG1017
	CN	9001 L-PLUG (5P)	KM200NA5L

E MAIN ASSY

SEMICONDUCTORS

	IC	1,2,12,13	M12L2561616A-5TG2A
NSP	IC	3	DYW1814
	IC	4,9,506	TC7WHU04FK
	IC	5	TC74LCX32FK
	IC	6	TC7SH04FUS1
	IC	7	TC7SH08FUS1
	IC	8	TC74VHC08FK
	IC	10	R5S77641N300BG
	IC	11	S-80930CNMC-G80
	IC	14	337S3959
	IC	16	TC7SG08FU
	IC	301	D810K013CZKB400
	IC	302	M12L2561616A-5TG2A
	IC	502,503	NJM8801E
	IC	504	NJM4580MD
	IC	505	WM8740SEDS
	IC	701	M66291GP
	IC	704	RTL8201FL-VB-CG
⚠	IC	705	BD9328EFJ
	Q	501	2SD2114K
	Q	502,507,516	LTC124EUB
	Q	503-506,517,518	2SK3320
	Q	508,509,511,512	HN1C01FU
	Q	510,513,514	LSCR523UB
	Q	515	LTA124EUB
	Q	519,520	HN1C01FU
	D	501	DA2J101

MISCELLANEOUS

	L	1,2 INDUCTOR	CTF1394
	L	301 CHIP BEADS	VTL1128
	L	303,304 INDUCTOR	CTF1579
	L	501,502 CHIP SOLID INDUCTOR	XTL3010
	L	709 CHOKE COIL	CTH1487
	L	710-742 FERRITE BEAD	CTF1528
	F	2,3,701,705 EMI FILTER	CCG1160
	F	703 EMI FILTER	DTL1106
	JA	702 LAN JACK	DKN1650
	X	1 RESONATOR (48 MHz)	CSS1760

Downloaded from www.Manualslib.com manuals search engine

Mark	No.	Description	Part No.
	X 2	CRYSTAL (26.965 MHz)	DSS1185
	X 501	OSCILLATOR (16.9344 MHz)	CWX3849
	X 701	CRYSTAL (25 MHz)	DSS1205
	CN 501	13P CONNECTOR	RKN1054
	CN 701	CONNECTOR	VKN2050
	CN 702	10P CONNECTOR	VKN1414
	CN 703	13P CONNECTOR	VKN1417
	CN 704	29P CONNECTOR	VKN1433
	CN 705	CONNECTOR	AKM1283
NSP	0	ID LABEL ASSY	AXW7015

RESISTORS

	R	6	RS1/16SS4701F
	R	41,42,81-88	RAB4CQ220J
	R	112,115,117,123	RAB4CQ220J
	R	124-127,326,327	RAB4CQ221J
	R	301-304,324,328	RAB4CQ220J
	R	329	RAB4CQ220J
	R	330,331,749,785	RAB4CQ221J
	R	341-344	RAB4CQ330J
	R	516-523	RN1/16SE3300D
	R	555-558	RN1/16SE4700D
	R	563,566,568,570	RN1/16SE5600D
	R	576	RS1/10SR821J
	R	739	RS1/16SS2491F
	R	779-782	RAB4CQ101J
	R	783	RS1/10SR0R0J
	R	787	RS1/10SR104J
	R	789	RS1/16SS3901F
	R	790	RS1/16SS1500F
	R	791	RS1/16SS1002F
	R	792	RS1/10SR153J
	R	793	RS1/10SR683J
	R	815	RAB4CQ221J
	R	831,832	RS1/4SA2R0J
	Other Resistors		RS1/16SS###J

CAPACITORS

	C	1-14,16,18	CKSSYB104K10
	C	15,17,19,21	CKSSYB102K50
	C	20,22,24-79	CKSSYB104K10
	C	23,85,88,91	CKSSYB102K50
	C	80,81,106,107	DCH1201
	C	82-84,86,87	CKSSYB104K10
	C	89,90,92,93	CKSSYB104K10
	C	94,123,126,129	CKSSYB102K50
	C	95	CCSSCH5R0C50
	C	96	CCSSCH4R0C50
	C	97,98	CCSSCH9R0D50
	C	99-105,115,116	CKSSYB104K10
	C	108,109,339,708	CEHVAW221M6R3
	C	110-114,120,338	DCH1201
	C	117	CKSSYB333K10
	C	118,119,121,122	CKSSYB104K10
	C	124,125,127,128	CKSSYB104K10
	C	130,131,133,319	CKSSYB104K10
	C	132,325-337,732	CKSSYB102K50
	C	134,514-517,532	CKSSYB222K50
	C	301-316,343	CKSSYB103K16
	C	324,342,502,527	CKSSYB104K10
	C	340,509,703,706	DCH1201
	C	341,717	CEHVAW101M6R3
	C	344,766,767	CCSSCH101J50
	C	345-349,352,353	CKSSYB103K16
	C	501,507	CEHVAW101M16
	C	503,504,508,549	CKSSYB103K16
	C	505,506,526	CEHVAW470M16
	C	510-513,535-538	CFHXSQ472J16
	C	518-521	CKSSYB153K16
	C	528-531,545,546	CKSSYB104K16
	C	533	CKSSYB222K50
	C	534,547,550,556	CKSSYB104K10
	C	543,544,743	ACG1142
	C	701,705,709,711	CKSSYB104K10
	C	702,704,710,712	CKSSYB103K16
	C	719,725-730,734	CKSSYB104K10
	C	720,737,741,756	DCH1201
	C	721,722	CKSRYB105K10
	C	731,742	CEHVAW221M6R3
	C	733,736	CKSSYB102K50
	C	739	CCSSCH6R0D50
	C	740	CCSSCH7R0D50
	C	744-747,757,760	CKSRYB104K50
	C	748,759	DCH1341
	C	750	CCSRCH102J50
	C	752	CKSRYB103K50
	C	753,755	CKSRYB223K50
	C	758,769,770	DCH1201
	C	761	CKSRYB104K50
	C	762	CCH1565
	C	764,768	CCSSCH221J50
	C	765	CCSSCH220J50

F JACB ASSY

SEMICONDUCTORS

⚠	IC	9401	NJM2374AM
⚠	IC	9403	NJM2872BF05
	Q	9401-9404	2SD2114K
	D	9401,9402	RB160M-60
	D	9403,9404	DA2J101
	D	9405,9406	NNCD6.2MF

MISCELLANEOUS

	L	9401	POWER INDUCTOR	DTL1187
	JA	9401	JACK	RKN1004
	JA	9402	2P PIN JACK	DKB1102
	JA	9403	RCA JACK/1P	DKB1113
	KN	4001	EARTH TERMINAL	AKF7002
	CN	9401	13P CONNECTOR	VKN1273
⚠	P	9401,9402	PROTECTOR (0.750 A)	DEK1121

RESISTORS

	R	9402	RS1/4SAR82J
	R	9403	RN1/16SE9100D
	R	9404	RN1/16SE1802D
	R	9405	RN1/16SE2201D
	R	9412	RD1/2VM471J
	R	9417	RD1/2VM271J
	Other Resistors		RS1/10SR###J

CAPACITORS

	C	9401,9404	CEHAZL101M25

Downloaded from www.Manualslib.com manuals search engine

Mark	No.	Description	Part No.
	C 9403		CCSRCH331J50
	C 9405,9406		CCH1357
	C 9407,9409,9415		CKSRYB103K50
	C 9408,9412-9414,9416		CKSRYB104K50
	C 9410,9411		DCE1017

G SDCB ASSY

SEMICONDUCTORS

Q	5101	RN2903
D	5101,5103,5105,5107	DAP202K
D	5102,5104,5106,5108	DAN202K

MISCELLANEOUS

L	5107	FERRITE BEAD	CTF1528
F	5101	EMI FILTER	CCG1160
CN	5101	CONNECTOR	CKS5956
CN	5102	10P CONNECTOR	VKN1414

RESISTORS

R	5119-5122	RS1/10SR0R0J
	Other Resistors	RS1/16SS###J

CAPACITORS

C	5101	CKSSYB104K16
C	5103	CKSSYB102K50
C	5105	DCH1201
C	5106	CEVW101M16

H USBB ASSY

SEMICONDUCTORS

⚠	IC	6301	TPS2557DRB
	Q	6301	RN1903

MISCELLANEOUS

JA	6301	USB CONNECTOR	DKB1106
JA	6302	USB JACK	DKN1646
CN	6301	13P CONNECTOR	VKN1273
CN	6302	PLUG (3P)	KM200NA3

RESISTORS

R	6301	RS1/16SS103J
R	6302,6306	RS1/16SS2202F
R	6304	RS1/16SS0R0J
	Other Resistors	RS1/10SR###J

CAPACITORS

C	6301,6309	CKSSYB103K16
C	6303	CCSRCH4R0C50
C	6304,6308,6310	DCH1201
C	6305	CEHVAW101M6R3
C	6307	CKSSYB104K10

I TFTB ASSY

SEMICONDUCTORS

	IC	4001	ADSP-BF531SBSTZ400
	IC	4003	TC7WHU04FK
	IC	4004	DYW1815
	IC	4005	M12L2561616A-5TG2A
	IC	4017,4021	TC7SH08FUS1
⚠	IC	4018	TK61222CQ6
⚠	IC	4019	NJM2887DL3
	Q	4001	LSCR523UB
	Q	4002-4004,4018,4019	LTC114YUB
	Q	4030-4033,4040,4041	LTC114YUB
	Q	4035	RTQ045N03
	Q	4036	RSQ025P03
	D	4004-4006,4024-4026	SML-512MW(PQ)
	D	4028,4029,4034,4037	SML-512MW(PQ)
	D	4030,4031	SML312WBCWA(Z1)
	D	4035	SMLE12BC7T(NP)
	D	4038	SML-512MW(PQ)
	D	4039	RB160M-60
	D	4044	NHSW046A-0171
	D	4045	SML-D12U8W(QR)

MISCELLANEOUS

L	4021-4027	FERRITE BEAD	CTF1528
L	4028	INDUCTOR	CTF1740
L	4029-4032	FERRITE BEAD	CTF1528
L	4033	INDUCTOR	CTF1379
L	4034-4050	FERRITE BEAD	CTF1528
L	4051,4052	CHIP BEEDS FILTER	BTX1042
L	4054	CHIP BEEDS FILTER	BTX1042
L	4056	CHOKE COIL	CTH1435
L	4057	POWER INDUCTOR	ATH7053
S	4001-4004,4020-4026	TACT SWITCH	DSG1134
S	4028	ENCODER SW	DSX1080
S	4029,4030	TACT SWITCH	DSG1134
X	4001	CRYSTAL RESONATOR (9 MHz)	DSS1164
X	4002	CRYSTAL RESONATOR (24.576 MHz)	XSS3003
CN	4002	29P CONNECTOR	VKN1433
CN	4007	16P CONNECTOR	VKN1420
CN	4012	22P CONNECTOR	VKN1426
CN	4013	CONNECTOR	CKS5660
CN	4014	CONNECTOR	CKS5561
CN	4015	4P CONNECTOR	VKN1409

RESISTORS

R	4002,4004,4053,4054	RAB4CQ470J
R	4022	RAB4CQ471J
R	4024	RAB4CQ101J
R	4027	RAB4CQ221J
R	4033	RAB4CQ104J
R	4049,4050	RAB4CQ680J
R	4058,4059,4093,4105	RS1/10SR181J
R	4081-4084	RAB4CQ560J
R	4089	RS1/10SR182J
R	4107,4109,4275-4277	RS1/10SR181J
R	4245-4248	RAB4CQ331J
R	4271,4272	RAB4CQ470J
R	4282,4283	RS1/10SR122J
R	4286	RS1/10SR112J
R	4288,4290	RS1/10SR181J
R	4359	RS1/16SS6202D
R	4363,4407	RS1/16SS3303D
R	4364	RS1/16SS6802D
R	4381	RS1/16SS5602D
R	4382	RS1/16SS3302D
R	4383	RS1/10SR0R0J
R	4392,4411	RS1/10SR471J
R	4412	RS1/10SR822J
	Other Resistors	RS1/16SS###J

Downloaded from www.Manualslib.com manuals search engine

Mark	No.	Description	Part No.
CAPACITORS			
	C	4001,4003,4011,4016	CCSRCH100D50
	C	4002,4024,4044-4046	CKSSYB104K16
	C	4006-4008,4029	CKSRYB104K50
	C	4028,4214,4272	CCH1565
	C	4165,4168-4172	CKSSYB104K16
	C	4173,4190,4200,4201	DCH1201
	C	4174-4181,4183-4189	CKSSYB104K16
	C	4191-4196,4199,4202	CKSSYB104K16
	C	4203,4255,4256	DCH1201
	C	4204,4212,4213,4217	CKSSYB104K16
	C	4211	CEVW101M25
	C	4216	CEHVAW101M6R3
	C	4218,4220,4222,4223	CKSSYB104K16
	C	4233-4235,4244-4247	CCSSCH101J50
	C	4249	CCSSCH221J50
	C	4253,4261,4264,4265	CKSRYB105K16
	C	4254	CCSSCH101J50
	C	4257,4266,4273,4281	CKSSYB104K16
	C	4258,4260,4262,4263	CCG1236
	C	4267	CKSRYB474K10
	C	4268,4269,4278	CCG1236
	C	4274	VCG1063
	C	4275	CCSSCH331J50
	C	4276	CKSRYB105K16
	C	4282,4283	DCH1156

J PNLB ASSY

Mark	No.	Description	Part No.
SEMICONDUCTORS			
⚠	IC	8002	NJM2392M
	IC	8003	DYW1817
	IC	8004	BD45302G
	IC	8005,8006	TC7SH32FUS1
	Q	8001	LSCR523UB
	Q	8002,8004,8005,8007	LTC124EUB
	Q	8003,8006,8009	LTC114YUB
	Q	8008,8010-8012	LTC124EUB
	Q	8013-8015,8021,8024	LTC114YUB
	Q	8016-8020	LTC124EUB
	Q	8023	LTA124EUB
	Q	8025	LTC114YUB
	D	8001,8012,8013,8015	SLI-343Y8Y(KLM)
	D	8002,8005,8008,8018	SLI-343M8G(GHJ)
	D	8003,8006,8009,8011	SLI-343U8R(HJK)
	D	8004,8007,8010	SLI-343Y8Y(KLM)
	D	8014,8016	SLI-343U8R(HJK)
	D	8017	SLR343BC4T(JK)
	D	8020	EP05Q06
	D	8021-8024,8027	SLI-343Y8Y(KLM)
	D	8026	SLR343WBD2PT(Z1)
MISCELLANEOUS			
	L	8001 RAD SPL INDUCTOR	DTH1212
	L	8002 INDUCTOR	CTF1579
	L	8003 INDUCTOR	CTF1379
	VR	8001,8002 VARIABLE RESISTOR	DCS1045
	S	8001-8004,8008 SWITCH	VSG1024
	S	8005-8007,8010-8012 TACT SWITCH	DSG1079
	S	8009,8020 TACT SWITCH	DSG1089
	S	8013-8019,8021,8022 SWITCH	VSG1024
	X	8001 CRYSTAL RESONATOR (15.975 MHz)	DSS1166
	CN	8001 22P CONNECTOR	VKN1282
	CN	8002 16P CONNECTOR	VKN1276
	CN	8003 7P CONNECTOR	VKN1267
	JH	8001,8002 5P CABLE HOLDER	51048-0500
	JH	8003 8P CABLE HOLDER	51048-0800
	JH	8004 7P CABLE HOLDER	51048-0700
	JP	8001 JUMPER WIRE	D20PDY0510E
	JP	8002 PARALLEL JUMPER	D20PDY0505E
	JP	8003 8P JUMPER WIRE	D20PDD0810E
	JP	8004 PARALLEL JUMPER/7P	DDD1611
	PC	8001 PHOTO INTERRUPTER	GP1S094HCZ0F
RESISTORS			
	R	8094	RS1/10SR3301D
	R	8095	RS1/10SR3302D
	R	8096	RS1/10SR2202D
	R	8110	RS1/4SA0R0J
	Other Resistors		RS1/10SR###J
CAPACITORS			
	C	8002,8004,8022,8031	CEHAS470M16
	C	8003,8005,8013,8019	CKSRYB104K16
	C	8006-8010,8017,8018	CCSRCH102J50
	C	8011,8012	CKSRYB474K10
	C	8014	CEHAS101M10
	C	8024,8025	CCSRCH100D50
	C	8027,8029,8033,8036	CKSRYB104K16
	C	8035	CEHAS470M16
	C	8038,8045-8048,8057	CKSRYB103K50
	C	8039-8043	CKSRYB104K16
	C	8044,8055,8056	DCH1201
	C	8050	CCSRCH560J50
	C	8051	CEHAZL101M25
	C	8052	DCH1165
	C	8053	CCSRCH221J50
	C	8054	CEHAZL221M10
	C	8058	CKSRYB103K50
	C	8060	CCSRCH121J50

K JFLB ASSY

Mark	No.	Description	Part No.
SEMICONDUCTORS			
⚠	IC	9202	TLC555IP
⚠	IC	9203	NJM2374AD
⚠	IC	9204	NJM2845DL1-33
	Q	9201,9202	KTC3198
	Q	9203,9204,9207,9209	LTC124EUB
	Q	9205	KTA1281
	Q	9206	RHP020N06
	Q	9208	2SD1767
	D	9201,9202,9206,9207	SLI-343U3R(HJKL)
	D	9203	RKZ6.8KG(B2)
	D	9204,9205,9208,9209	SLR343WBD2PT(Z1)
	D	9210-9212,9214	RB160M-60
	D	9213	DA2J101
	D	9215	RKZ6.2KG(B2)
MISCELLANEOUS			
	L	9201 POWER INDUCTOR	DTL1187
	V	9201 FL INDICATOR TUBE	DEL1058
	T	9201 POWER TRANSFOMER	DTT1232
	CN	9203 CONNECTOR	CKS1072

Downloaded from www.Manualslib.com manuals search engine

Mark	No.	Description	Part No.
	0	FL HOLDER	DNF1735
	JH 9201	12P CABLE HOLDER	51048-1200
	JH 9202	4P CABLE HOLDER	51048-0400
	JP 9202	JUMPER WIRE	D20PYY0405E
	JP 9203	JUMPER WIRE	D20PDY1210E
⚠	P 9201	PROTECTOR (1.000 A)	DEK1122

RESISTORS

R 9210,9215		RS1/4SA2R0J
R 9220		RS1/4SA0R0J
R 9221		RS1/4SAR51J
R 9222,9223		RS1/4SA271J
R 9225		RS1/8SQ102J
R 9226		RS1/8SQ101J
R 9228		RS1/4SA103J
R 9229		RN1/16SE1201D
R 9230		RN1/16SE1602D
R 9231		RN1/16SE6802D
R 9232		RN1/16SE4302D
R 9233,9234		RN1/16SE2201D
R 9235		RS1/8SQ223J
R 9241,9242		RS1/4SA151J
R 9245,9246		RS1/8SQ181J
R 9247		RS1/4SA331J
Other Resistors		RS1/10SR###J

CAPACITORS

C 9201,9205,9208	CEHAR101M10
C 9202	CKSRYB223K50
C 9203	CEHAR470M16
C 9204,9207,9212,9215	CKSRYB104K50
C 9206	CEHAZL100M50
C 9209,9221	CEHAZL220M50
C 9213,9222-9225	CCSRCH101J50
C 9216	CEHAZL221M25-P35
C 9217	CCSRCH331J50
C 9218,9219,9226,9227	CKSRYB104K50

L CDCB ASSY

SEMICONDUCTORS

IC 5001	AD7147ACPZ500RL7
Q 5001	LTC114YUB
D 5001,5002	CSL0401WBHCW1(A)

MISCELLANEOUS

L 5001 CHIP SOLID INDUCTOR	XTL3010
L 5002-5006 INDUCTOR	CTF1639
CN 5001 7P CONNECTOR	VKN1411
CN 5002 4P CONNECTOR	VKN1409

RESISTORS

R 5005	RS1/10SR122J
R 5006	RS1/10SR681J
Other Resistors	RS1/16SS###J

CAPACITORS

C 5001	CKSSYB103K16
C 5002	CKSSYB104K16
C 5003	DCH1201
C 5004-5008	CCSRCH101J50

Mark	No.	Description	Part No.

M SDSW ASSY

SEMICONDUCTORS

Q 8601	LTC124EUB
D 8601	SLI-343U8RC(HJKL)

MISCELLANEOUS

S 8601 SWITCH	VSG1024
S 8602 PUSH SWITCH	DSG1017

RESISTORS

All Resistors	RS1/10SR###J

N SLDB ASSY

SEMICONDUCTORS

Q 8701	LTC114YUB
D 8701	SLI-343M8G(GHJ)

MISCELLANEOUS

VR 8701 VARIABLE RESISTOR	DCV1013
VR 8702 SEMI FIXED RESISTOR	CCP1571
S 8701 SWITCH	VSG1024

RESISTORS

All Resistors	RS1/10SR###J

MISCELLANEOUS

JH 8701 8P CABLE HOLDER	51048-0800

CAPACITORS

C 8702	CEJQ470M16
C 8703	CKSRYB104K16

O EUPB ASSY

SEMICONDUCTORS

Q 8651	LTC114YUB
D 8651	SLI-343U8R(HJK)
D 8652	SLI-343M8G(GHJ)

MISCELLANEOUS

S 8651 SWITCH	VSG1024
CN 8651 5P JUMPER CONNECTOR	52147-0510

RESISTORS

All Resistors	RS1/10SR###J

P CNCT ASSY

MISCELLANEOUS

CN 8801 12PJUMPER CONNECTOR	52147-1210

CAPACITORS

C 8801,8802	CCSRCH221J50

Q KSWB ASSY

SEMICONDUCTORS

Q 8501,8502	LTC114YUB
D 8501	SLR343EC4T(LMN)
D 8502	SLI-343Y8Y(KLM)

MISCELLANEOUS

S 8501,8502 TACT SWITCH	DSG1117
CN 8501 4P CONNECTOR	VKN1264

Downloaded from www.Manualslib.com manuals search engine

Mark	No.	Description	Part No.
	CN 8502	7P JUMPER CONNECTOR	52147-0710

RESISTORS

	All Resistors	RS1/10SR###J

R JOGB ASSY

MISCELLANEOUS

	CN 9301	4PJUMPER CONNECTOR 52151-0410

RESISTORS

	All Resistors	RS1/10SR###J

MISCELLANEOUS

	PC 9301	PHOTO INTERRUPTER SEDS-7573

CAPACITORS

	C 9301,9302	CKSRYB103K50

S INDB ASSY

SEMICONDUCTORS

	Q 6201	LTC114YUB
	D 6201	CSL0401WBHCW1(A)

MISCELLANEOUS

	CN 6201	04P CONNECTOR RKN1045

RESISTORS

	All Resistors	RS1/10SR###J

T POWER SUPPLY ASSY

There is no service parts.

U AC IN ASSY

MISCELLANEOUS

⚠	S 9101	SWITCH	DSA1037
⚠	CN 9101	AC CODE SOCKET	RKP1751
⚠	JP 9101	CONNECTOR ASSY2P	DKP3822

CAPACITORS

⚠	C 9102	ACG7030

Downloaded from www.Manualslib.com manuals search engine

Other ManualsLib Projects

 www.manualslib.com

 www.manualslib.de

 www.manualslib.es

 www.manualslib.fr

 www.manualslib.nl

 www.manualslib.mx

 www.manualslib.tech 30+ Languages