MASTER
M

SERVICE MANUAL

ELECTRONIC KEYBOARD

Casiotone 1000P



CASIO

52

INDEX

	Page	Fiche Cell
Schematic Diagram PCB M551-MA1M	I	A4
Schematic Diagram PCB M551-AS1M	II	A6
Schematic Diagram PCB's M551-CN1,CN2,LD1,LD2,LD3	III	A8
Schematic Diagram PCB M551-PS1M	IV	A10
Circuit Explanations		
Normal Mode	1	A11
Split/Arpeggio Mode	1	A11
Block Diagram	2	A12
Data Bus Control Circuit	3	A13
Keyboard Matrix	4	A14
LED Matrix	5	B1
D/A Converter	7	B3
D/A Shift Circuit	8	B4
Sample/Hold Circuit	9	B5
Schmitt/Power Down Detecting Circuit	10	B6
Tuning /Arpeggio ,Tempo Control Dial Circuit	11	B7
Major Waveforms	12	B8
Bit compensation Adjustment	13	B9
Technical News Bulletin	15	B11
Parts List		C1
Oversized Schematic Diagram of MA1M		E12

CIRCUIT DIAGRAM

PCB NO. M551 MA1M

CT-1000P Service Manual

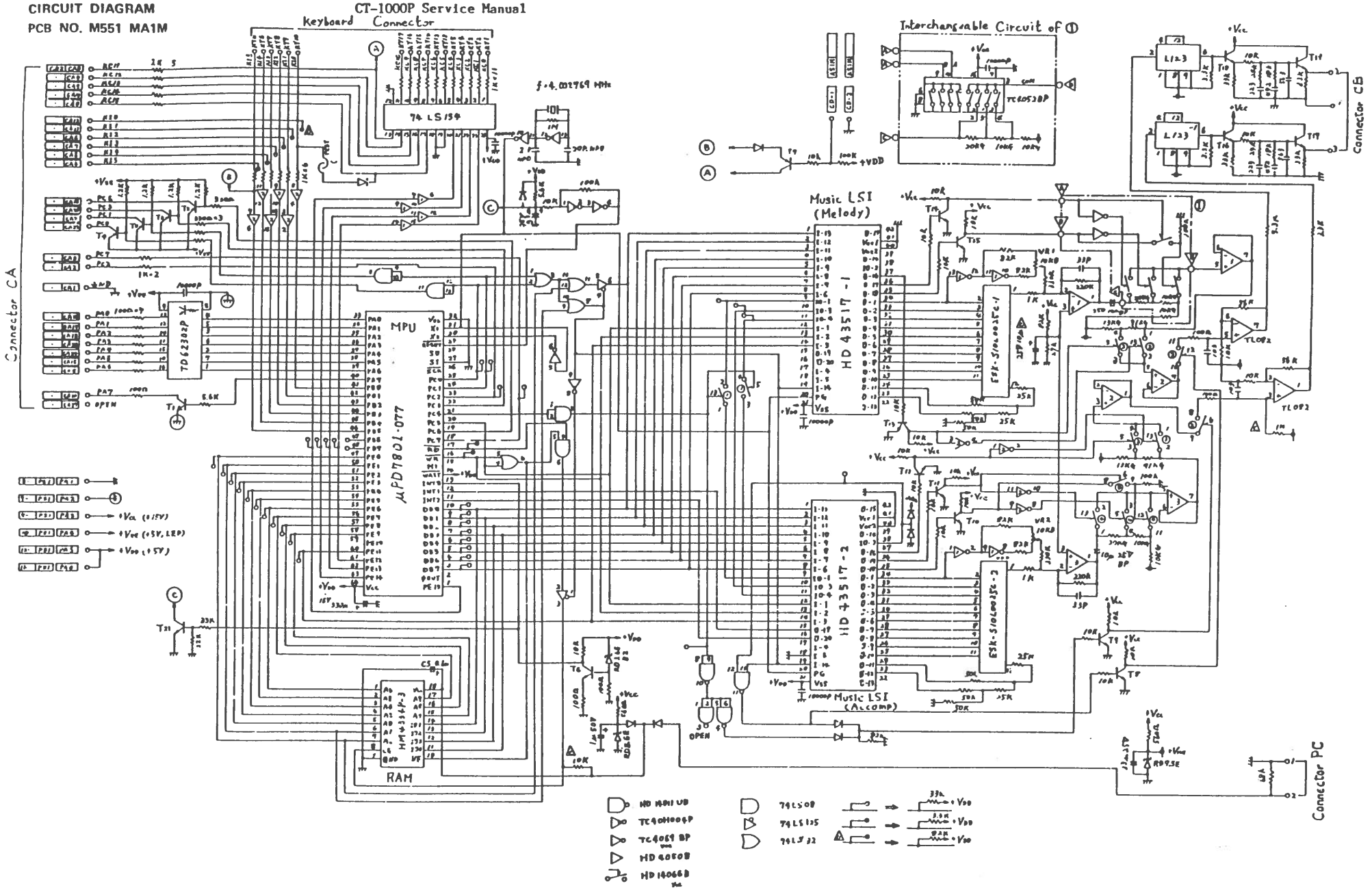

CIRCUIT DIAGRAM
M551AS1M

CT-1000P Service Manual

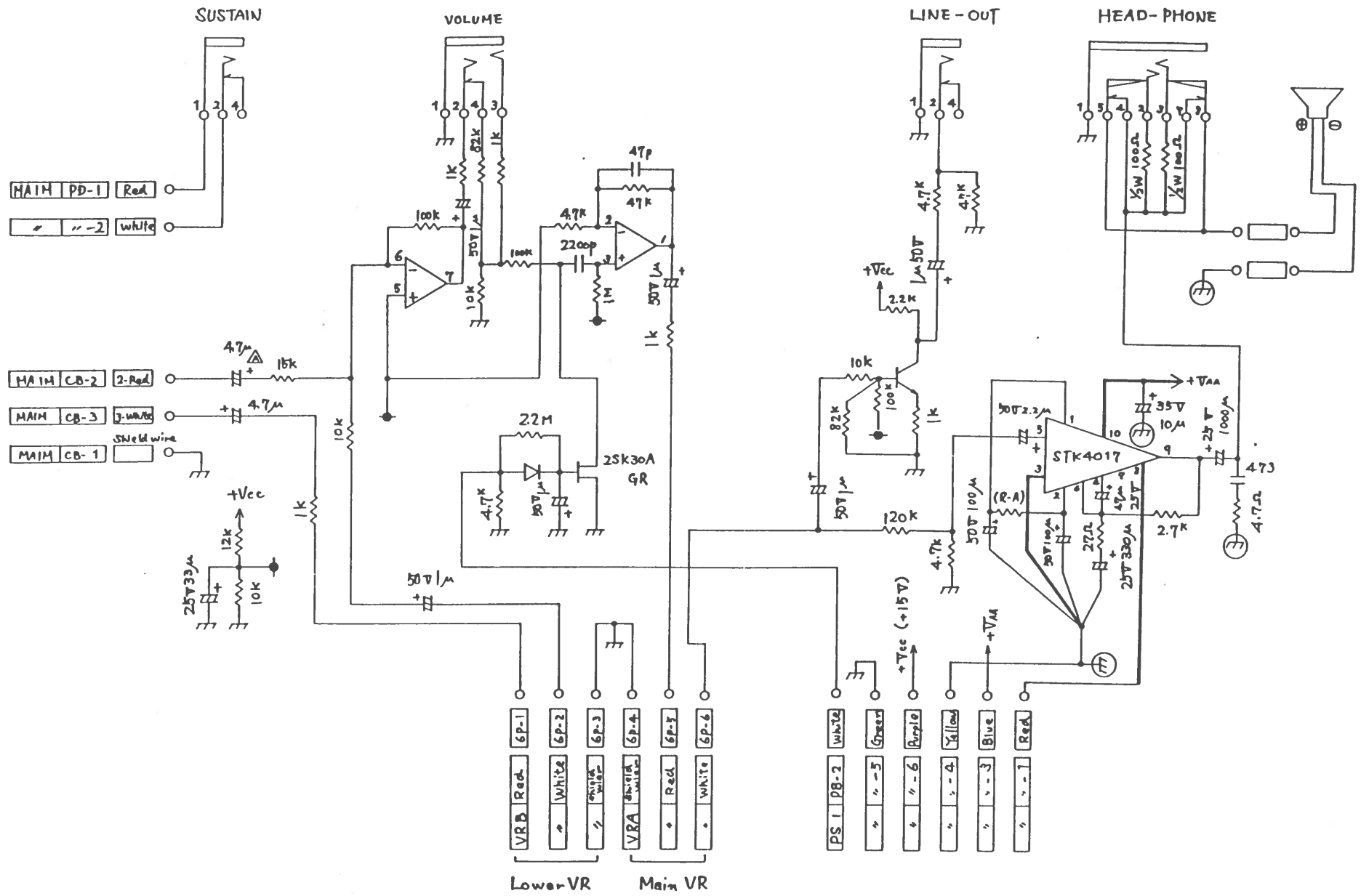

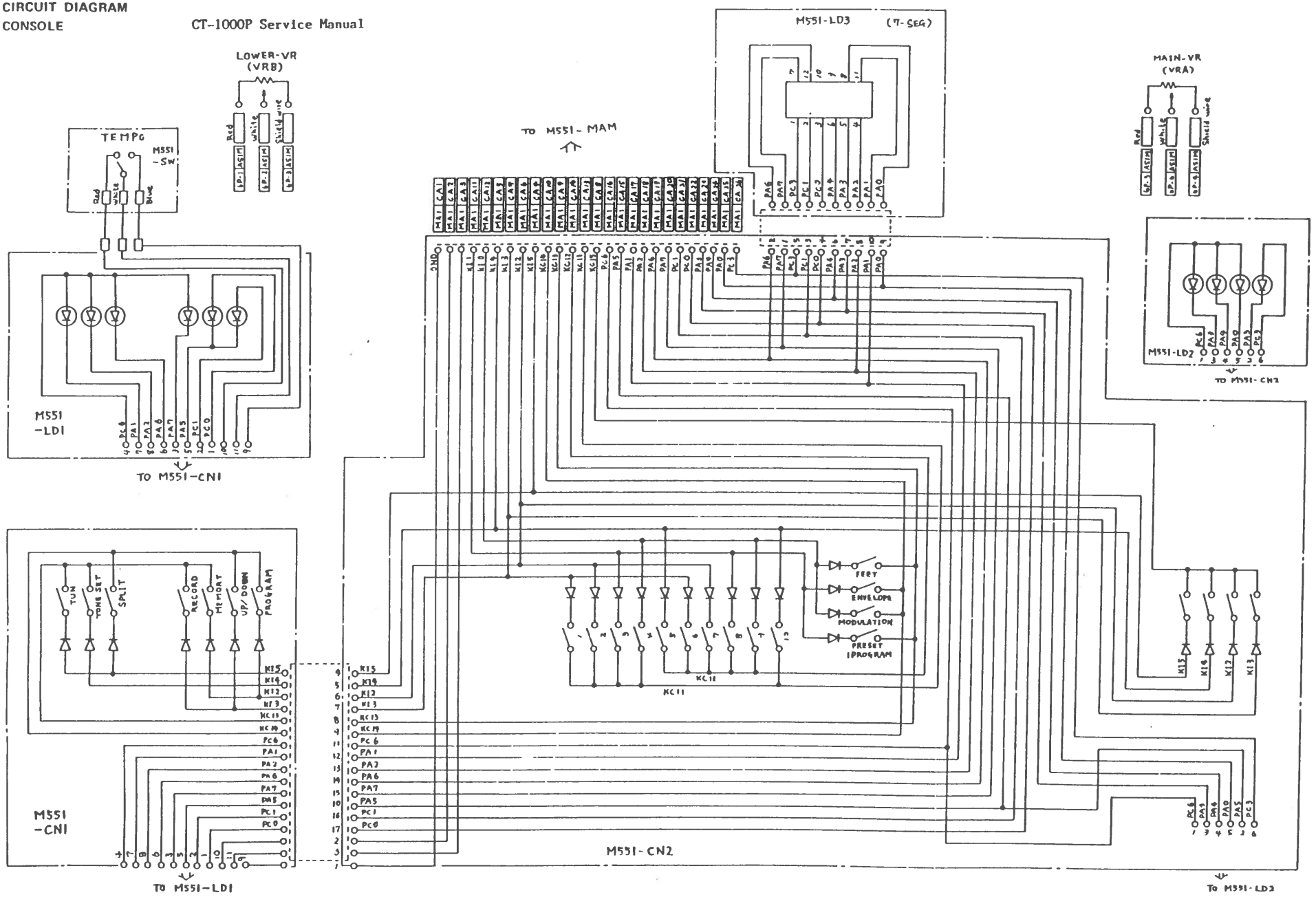
LOWER-VR
(VRB)
TEMPO
M551
-SW
M551
-LD1
TO M551-CN1
TO M551-MAM
M551-LD3
(7-SEG)
MAIN-VR
(VRA)
M551-LD2
TO M551-CN3
TUN
TONE SET
SPLIT
RECORD
MEMORY
UP/DOWN
PROGRAM
FEEY
ENVELOPE
MODULATION
PRESET
PROGRAM
KC11
KC12
M551
-CN1
M551-CN2
TO M551-LD1
To M551-LD3

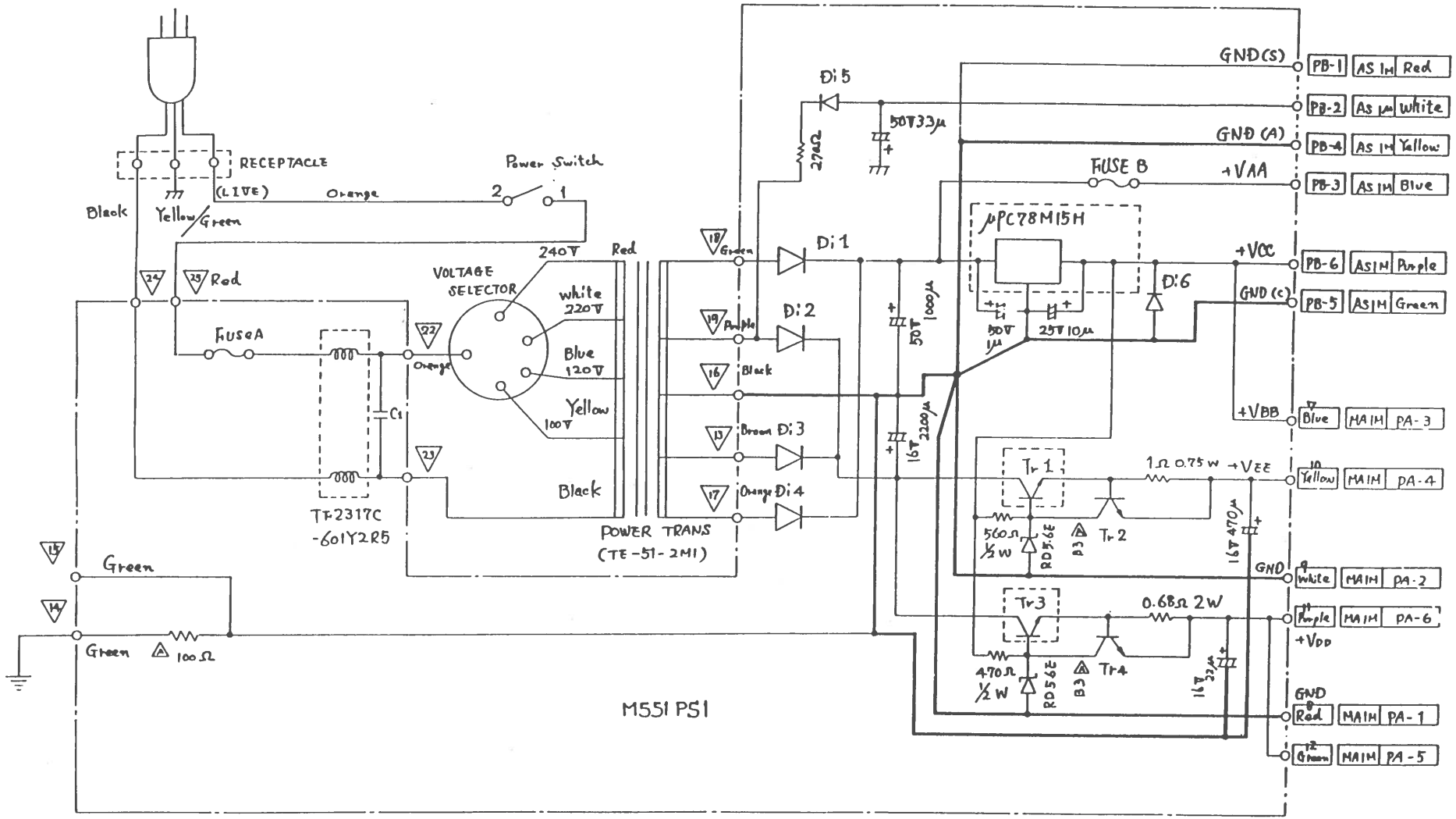

1. Fuse A { Europe .... 0.6A; Other countries 1.5A
2. C_1 = { Canada .... LHY-103M125TAC; Other Countries ... PHE 265HB 822
3. Tr1, Tr3 .... 2SD612KE
4. Tr2, Tr4 .... 2SC2320E
5. Di1. Di4 .... DS135D
6. Di2, Di3 .... DSA26B
7. Di5, Di6 .... DS442
8. ..... shows Heat Sink.
9. FUSE B 0.5A

1. FUNDAMENTAL SYSTEM OF THE CIRCUIT

In accordance with the switches selections, Casiotone 1000P varies it's circuit control system as follows.

1-1 Normal Mode (SPLIT switch · · · OFF, ARPEGGIO switch · · · OFF)

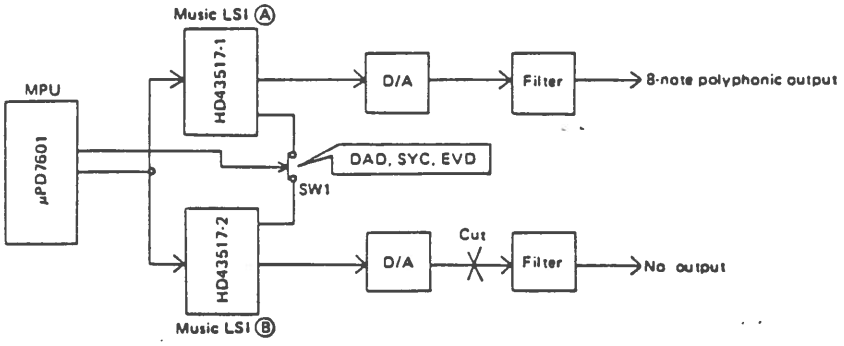

The LSI μPD7801 is a 8-bit MPU (Micro Processing Unit) and generates 8-bit data in accordance with hit key and selected switches. The 8-bit data is converted into 12-bit digital sound signal. At this mode, the Music LSI A becomes the master chip while the Music LSI B becomes the slave chip. As one Music LSI generates four note polyphonic signals (4 notes can be sounded simultaneously), signals DAD (serial sound data), EVD (envelope data) and SYC (synchronizing signal) are sent from the slave chip to the master chip. Thus the master chip generates 8-note polyphonic sound signal.
As the slave chip also generates sound signals, the output is cut between the D/A converter and the filter.

1-2 Split, Arpeggio Mode (SPLIT switch OFF and ARPEGGIO switch ON/SPLIT switch ON)

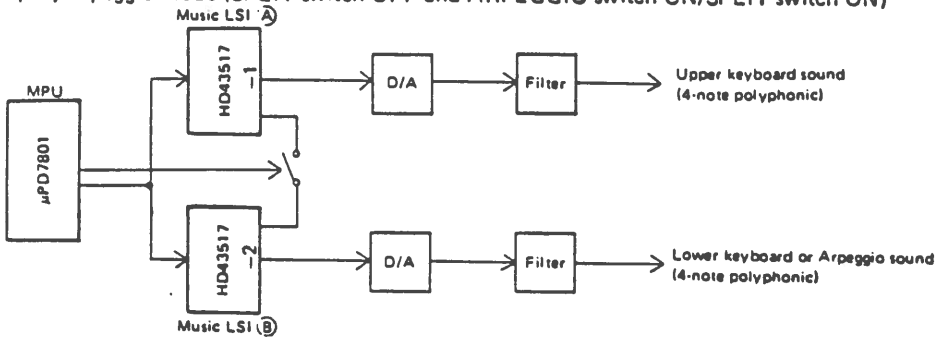

As the switch SW1 opens, the two Music LSI's function independently. The Music LSI A generates upper keyboard sound while the Music LSI B generates lower keyboard sound or arpeggio sound.

2. BLOCK DIAGRAM

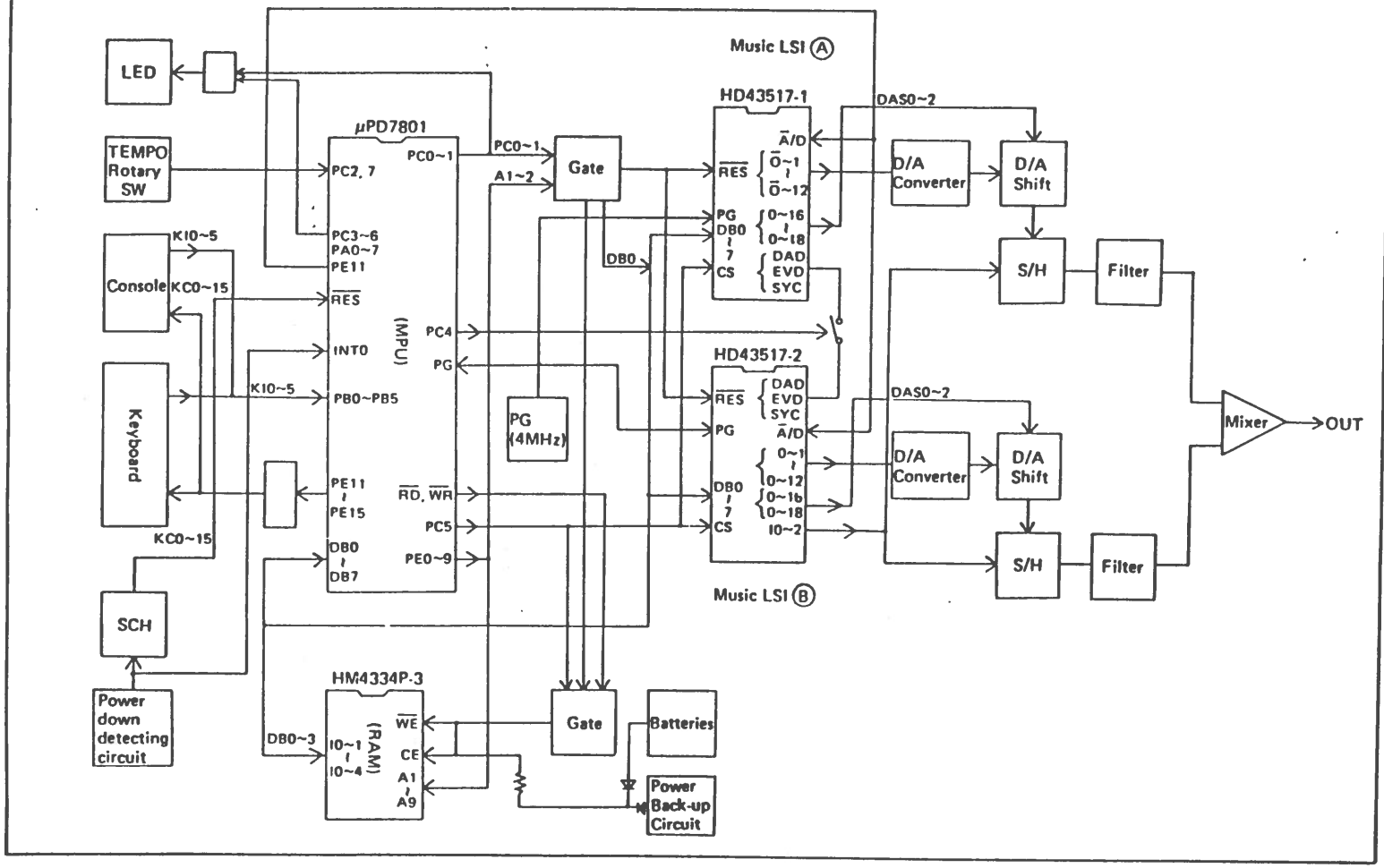

3. DATA BUS CONTROL CIRCUIT

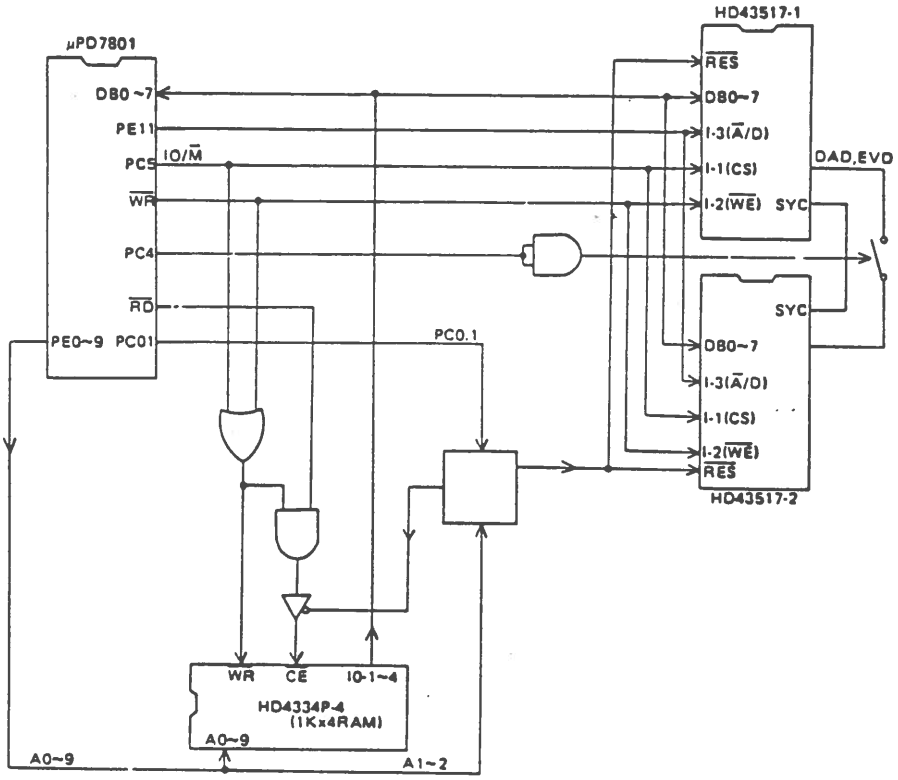

Functions of major signals.

DB0-DB7 : 8-bit data bus line.

PE11(A/D) : As signals DB0-DB7 also designates internal address of the Music LSIs, the signal discriminates them as data or address bus. When the signal is at "LOW" level, DB0-DB7 selects Music LSIs' address while they become data when PE11 is at "HIGH" level.

WR : At "L" level, the MPU writes data into the Music LSIs or the RAM.

RD : At "L" level, the MPU reads data from the Music LSIs or the RAM.

PC5 : Discriminates whether the data transfer is between the MPU and the RAM or MPU and Music LSIs. At "L", the data transferis between MPU and RAM. Data is transferred between MPU and Music LSIs when the signal is at "H" level.

PC4 : Connect or disconnect the data transfer between the Music LSIs. At normal mode, signal stays at "H" while it drops to "L" level at "SPLIT" or "ARPEGGIO" mode.

PE0-PE9 (A0-A9) : Designates the RAM address.

	KI5	KI4	KI3	KI2	KI1	KI0
KC 0	C1	C1#	D1	D1#	E1	F1
KC 1	F1#	G1	G1#	A1	A1#	B1
KC 2	C2	C2#	D2	D2#	E2	F2
KC 3	F2#	G2	G2#	A2	A2#	B2
KC 4	C3	C3#	D3	D3#	E3	F3
KC 5	F3#	G3	G3#	A3	A3#	B3
KC 6	C4	C4#	D4	D4#	E4	F4
KC 7	F4#	G4	G4#	A4	A4#	B4
KC 8	C5	C5#	D5	D5#	E5	F5
KC 9	F5#	G5	G5#	A5	A5#	B5
KC10	C6					
KC11	P.SUS	T10	T1	T2	T3	T4
KC12		T5	T6	T7	T8	T9
KC13	TUN.	TONE-SET	RECORD	MEMORY	PRESET/PRO	FEET
KC14	SPLIT		UP/DOWN	PROGRAM	ENVELOPE	MODU
KC15	VIB	D. VIB	SUS	H. VIB		

4. KEYBOARD MATRIX

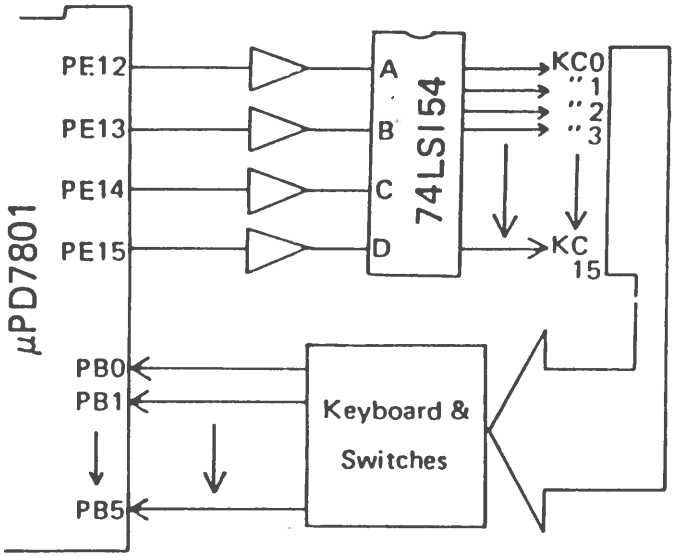

Function table of 74LS154

FUNCTION TABLE

INPUTS						OUTPUTS															
G1	G2	D	C	B	A	0	1	2	3	4	5	6	7	8	9	10	11	12	13	14	15
L	L	L	L	L	L	L	H	H	H	H	H	H	H	H	H	H	H	H	H	H	H
L	L	L	L	L	H	H	L	H	H	H	H	H	H	H	H	H	H	H	H	H	H
L	L	L	L	H	L	H	H	L	H	H	H	H	H	H	H	H	H	H	H	H	H
L	L	L	L	H	H	H	H	H	L	H	H	H	H	H	H	H	H	H	H	H	H
L	L	L	H	L	L	H	H	H	H	L	H	H	H	H	H	H	H	H	H	H	H
L	L	L	H	L	H	H	H	H	H	H	L	H	H	H	H	H	H	H	H	H	H
L	L	L	H	H	L	H	H	H	H	H	H	L	H	H	H	H	H	H	H	H	H
L	L	L	H	H	H	H	H	H	H	H	H	H	L	H	H	H	H	H	H	H	H
L	L	H	L	L	L	H	H	H	H	H	H	H	H	L	H	H	H	H	H	H	H
L	L	H	L	L	H	H	H	H	H	H	H	H	H	H	L	H	H	H	H	H	H
L	L	H	L	H	L	H	H	H	H	H	H	H	H	H	H	L	H	H	H	H	H
L	L	H	L	H	H	H	H	H	H	H	H	H	H	H	H	H	L	H	H	H	H
L	L	H	H	L	L	H	H	H	H	H	H	H	H	H	H	H	H	L	H	H	H
L	L	H	H	L	H	H	H	H	H	H	H	H	H	H	H	H	H	H	L	H	H
L	L	H	H	H	L	H	H	H	H	H	H	H	H	H	H	H	H	H	H	L	H
L	L	H	H	H	H	H	H	H	H	H	H	H	H	H	H	H	H	H	H	H	L
L	H	X	X	X	X	H	H	H	H	H	H	H	H	H	H	H	H	H	H	H	H
H	L	X	X	X	X	H	H	H	H	H	H	H	H	H	H	H	H	H	H	H	H
H	H	X	X	X	X	H	H	H	H	H	H	H	H	H	H	H	H	H	H	H	H

PIN NO. 18 19 20 21 22 23 1 2 3 4 5 6 7 8 9 10 11 13 14 15 16 17

5. LED MATRIX

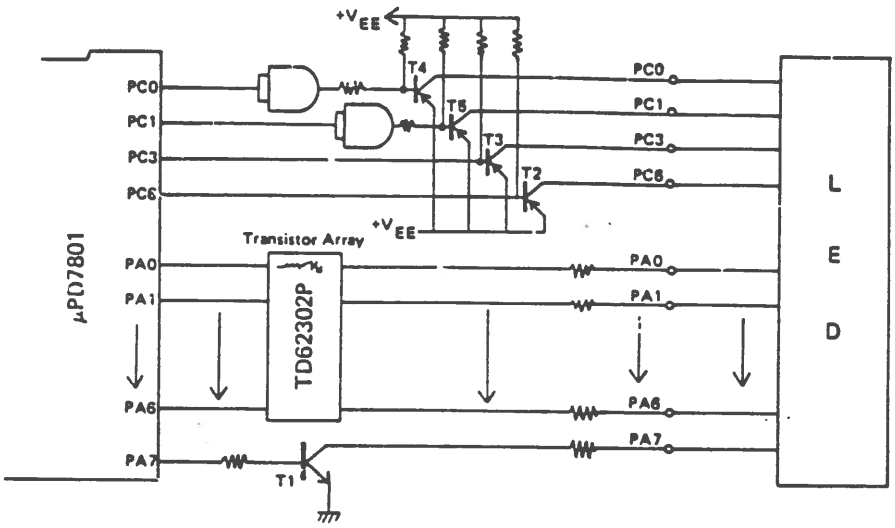

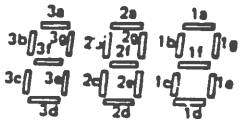

	PA7	PA6	PA5	PA4	PA3	PA2	PA1	PA0
PC0	1g	1f	up/down ARPEGGIO	1e	1d	1c	1b	1a
PC1	2g	2f	PRO ARPEGGIO	2e	2d	2c	2b	2a
PC3	3g	3f	SUS	3e	3d	3c	3b	3a
PC6	MEMORY	SPLIT		D-VIB	VIB	TONE-SET	TUNE	H-VIB

An LED segment is lit when signal PC is at "L" level and signal PA is at "H" level. The above table shows the LED matrix.
For example, segment 1a is lit when PA0 is at "H" and PC0 is at "L"

Time Chart for displaying 0-0 and Delayed Vibrato LED.

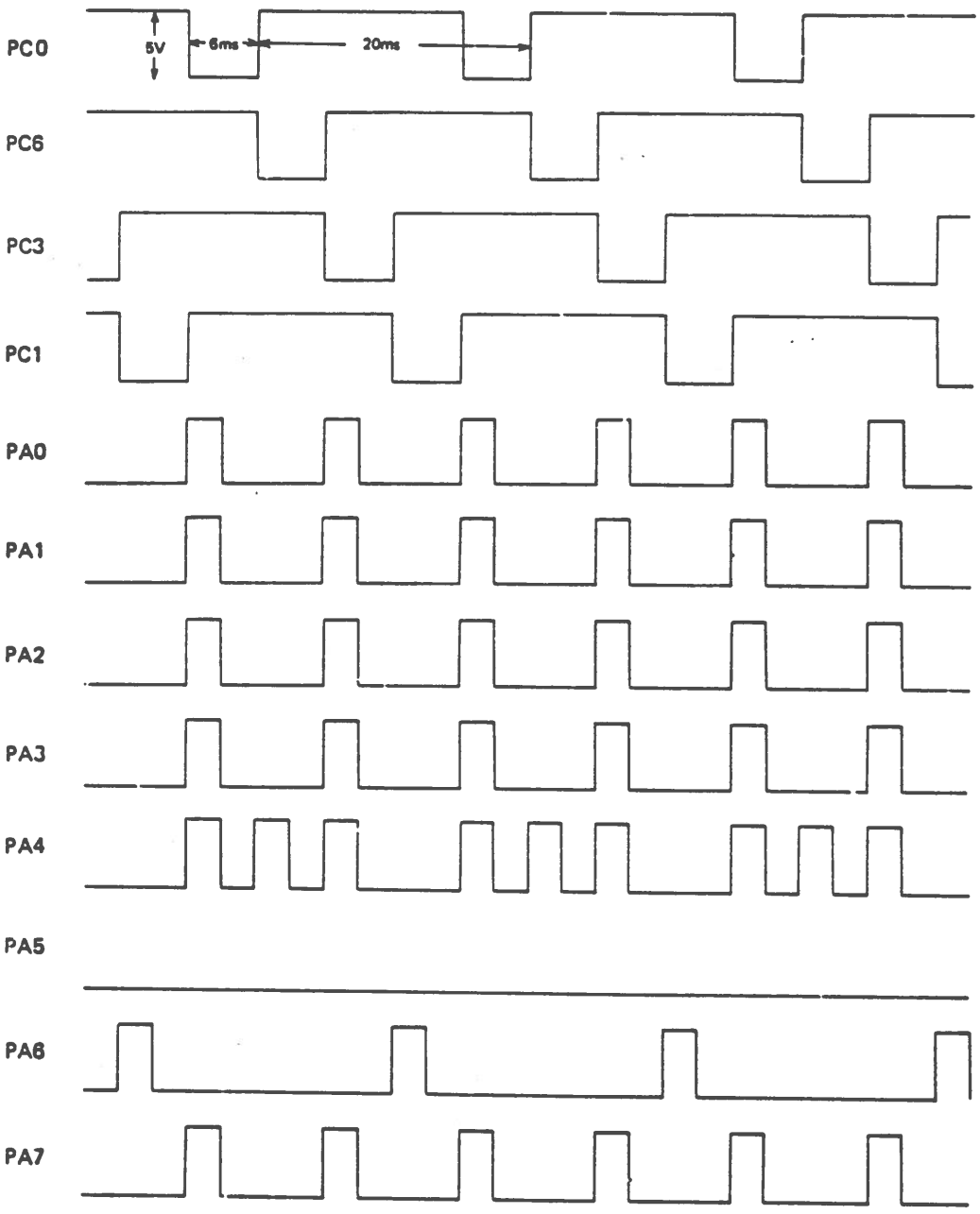

B2

6. D/A CONVERTER

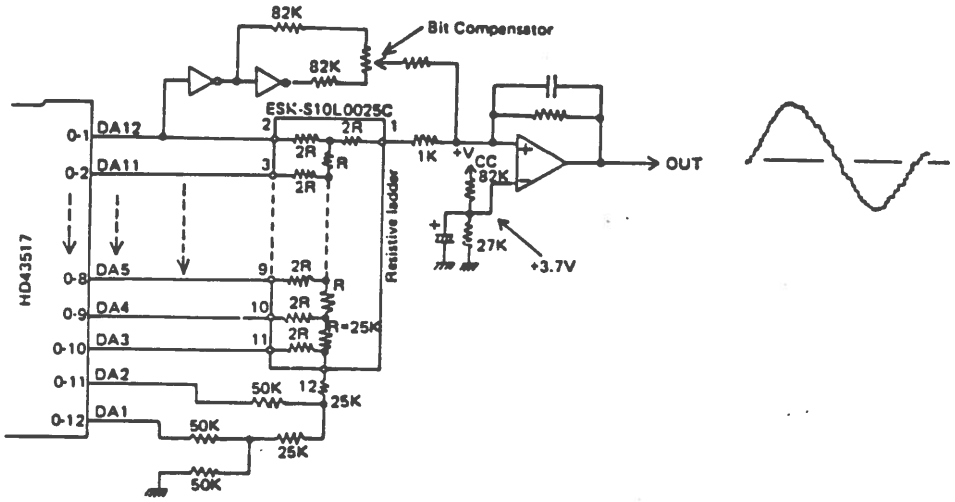

As the output of the Music LSI is digital signal, the D/A converter turns them into a sound waveform. The D/A converter is composed of resistive ladder network. By the voltage levels of the LSI's output signals, the current flow in the resistive ladder varies. Thus the digital input is changed into analog amount of current. The OP amp converts amount of the current to voltage level. The variable resistor VR is a bit compensator. By delay time of the buffer and resistance accuracy of resistive ladder, time lag between the output bit make a noise at a release time of a sound. This noise can be removed by applying inverse voltage of noise to resistive ladder output.

7. D/A SHIFT CIRCUIT

The circuit varies the output voltage level of the D/A converter. By turning ON or OFF the switches, the resistance of the OP amps are varied so that the output level is reduced. The switches SW1 - SW5 are turned ON or OFF by signals DAS0 - DAS1 from the MPU. The circuit reduces the output level of the D/A converter up to 1/32.
The circuit functions when more than 2 keys are hit simultaneously.

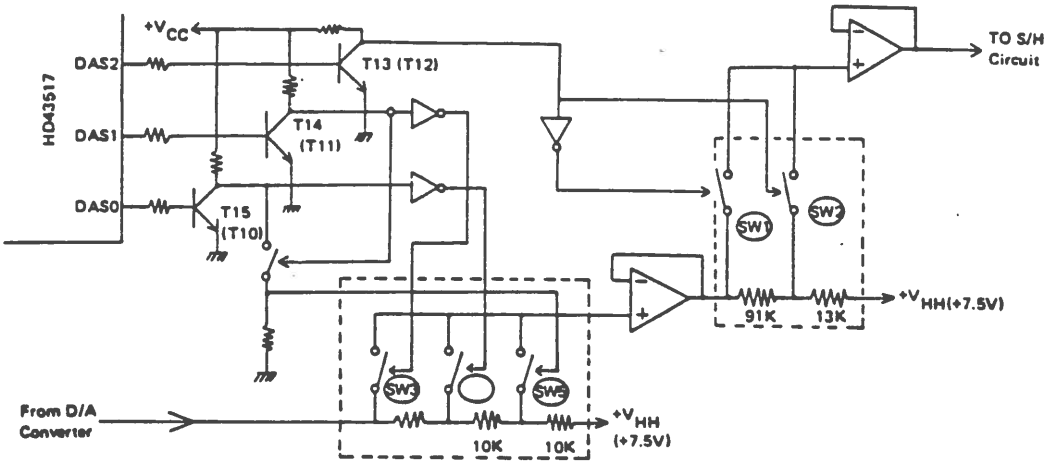

Example ..... To reduce output level in 1/16

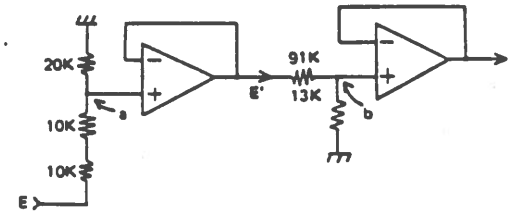

Voltage levels of the signals DAS0 - DAS1 are "H", "L", "L" respectively so that the switches SW2 and SW4 turn ON the equivalent circuit at this time is as shown left.
In this figure, the voltage level of point a is .....

$$\frac{20K}{10K + 10K + 20K} E = \frac{1}{2}E$$

The half reduced level is further reduced by 91K and 13K resistors.

$$\frac{13K}{13K + 91K} E' = \frac{1}{8}E'$$ Thus voltage level of point b is .....

$$1/2 \times 1/8\ E = 1/16E$$

	SW1	SW2	SW3	SW4	SW5	DAS2	DAS1	DAS0
Level 1	ON	OFF	ON	OFF	OFF	H	H	L
Level 1/2	ON	OFF	OFF	ON	OFF	H	L	H
Level 1/4	ON	OFF	OFF	OFF	ON	H	L	L
Level 1/8	OFF	ON	ON	OFF	OFF	L	H	L
Level 1/16	OFF	ON	OFF	ON	OFF	L	L	H
Level 1/32	OFF	ON	OFF	OFF	ON	L	L	L

8. S/H (Sample/Hold) CIRCUIT

When digital input of D/A converter varies, the D/A converter generates a spike noise so called glitch. The circuit eliminates the glitches.

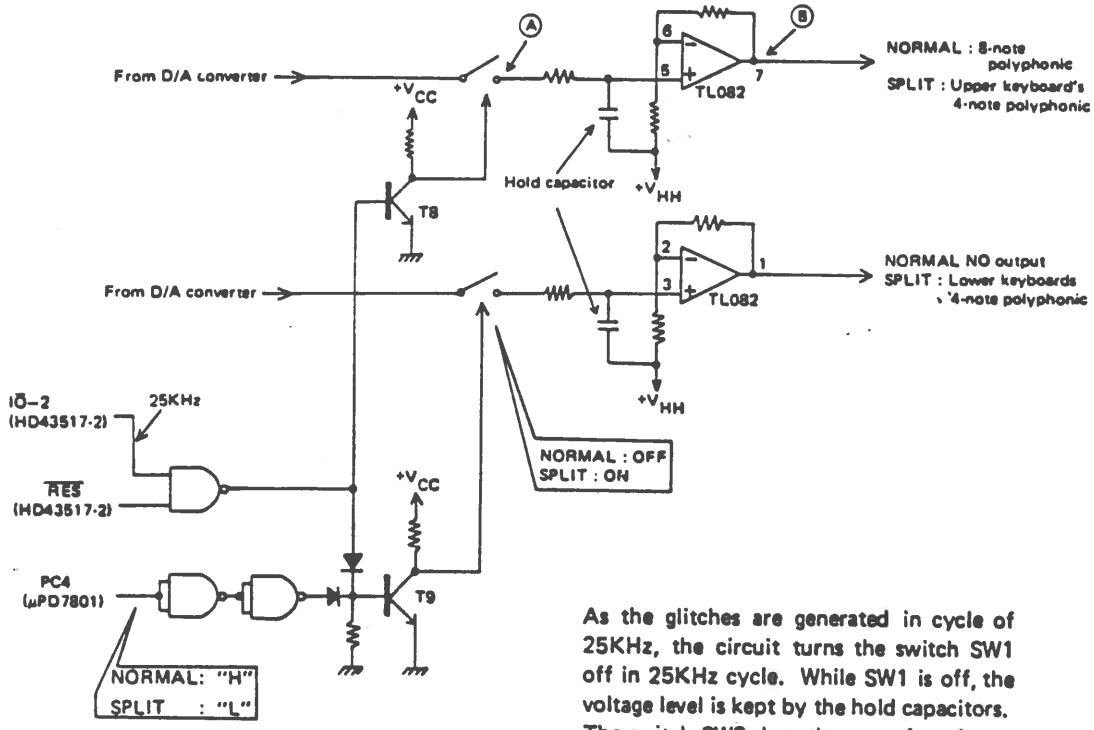

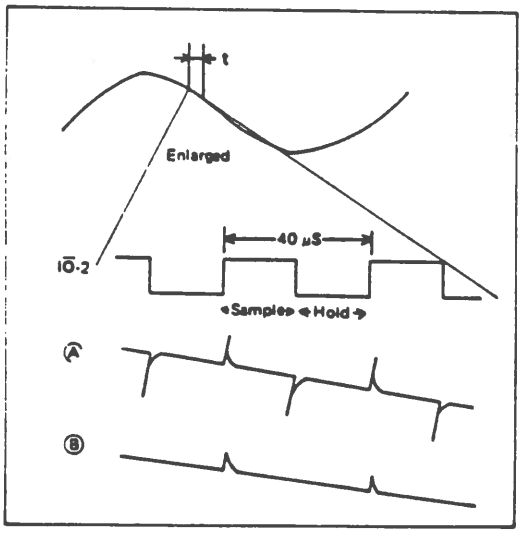

As the glitches are generated in cycle of 25KHz, the circuit turns the switch SW1 off in 25KHz cycle. While SW1 is off, the voltage level is kept by the hold capacitors. The switch SW2 does the same function as SW1 however, at NORMAL mode, it keeps turned OFF so that the signal for the lower keyboard cannot pass through.

9. SCHMITT/POWER DOWN DETECTING CIRCUIT

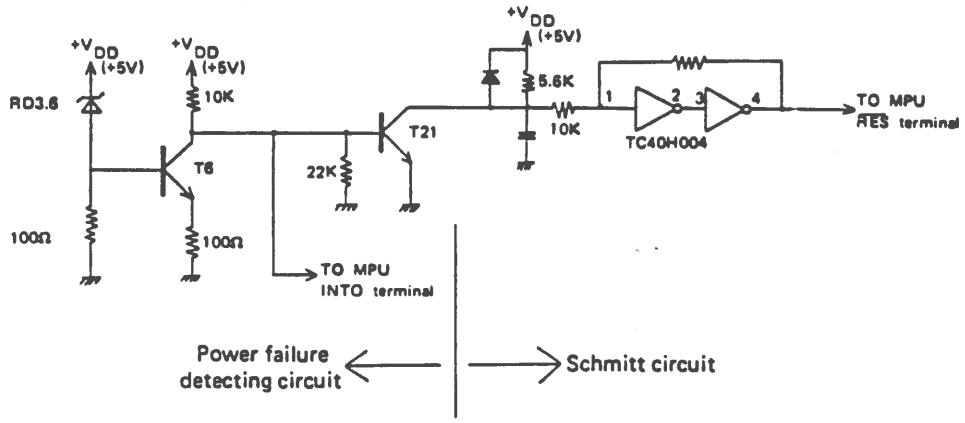

When the equipment is turned on, transistors T6 and T21 turn ON and OFF respectively $\overline{RES}$ terminal of the MPU raise from "L" to "H" gradually by capacitor c and the resistor r.
By this delay, the MPU is initiated.
At power failure or the equipment is turned off, +VDD (+5V) drops, when VDD is approx. +4.2V, T6 turns OFF so that a pulse is applied to MPU INTO terminal. The MPU holds a function and protects memory data.

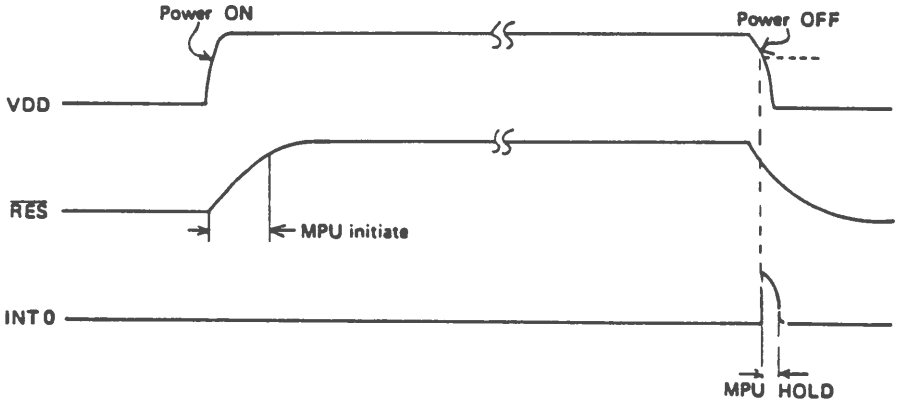

10. TUNING/ARPEGGIO TEMPO CONTROL DIAL

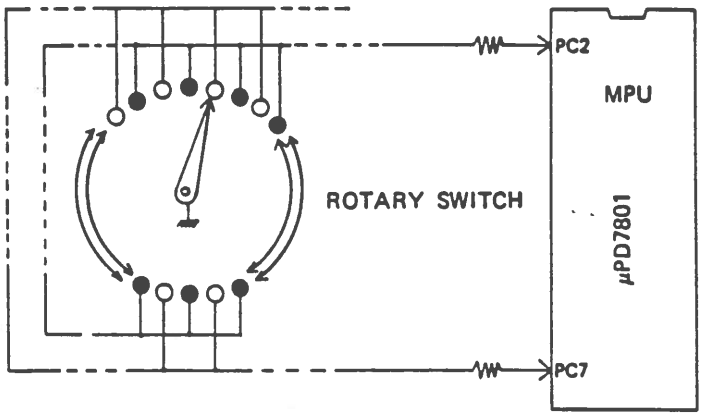

Tuning and arpeggio tempo control dial's terminals are connected to PC2 and PC7 terminals of the MPU alternatively.
When the dial is turned pulses are applied to PC2 and PC7 terminals of the MPU. The MPU counts the raising and dropping edge of the pulses and controls the tune and arpeggio tempo in

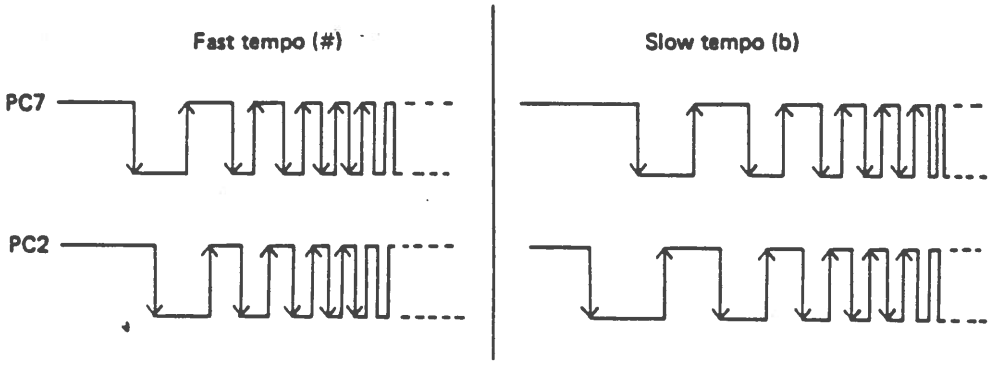

accordance with the number of the edge.
MPU discriminates turning direction of the dial by raising and dropping order of the PC2 and PC7 pulses.

11. MAJOR WAVEFORMS

TONE : JAZZ ORGAN HIT KEY : C3

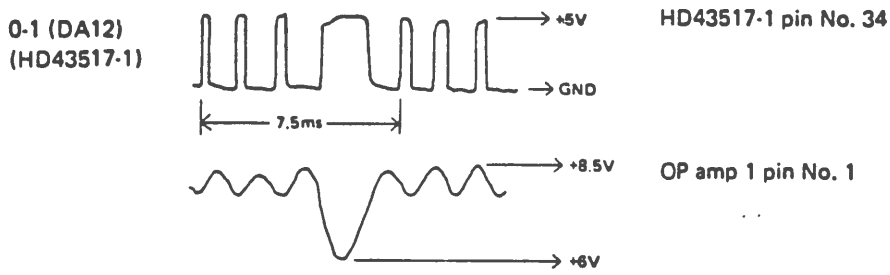

TONE : PIPE ORGAN HIT KEY : C3

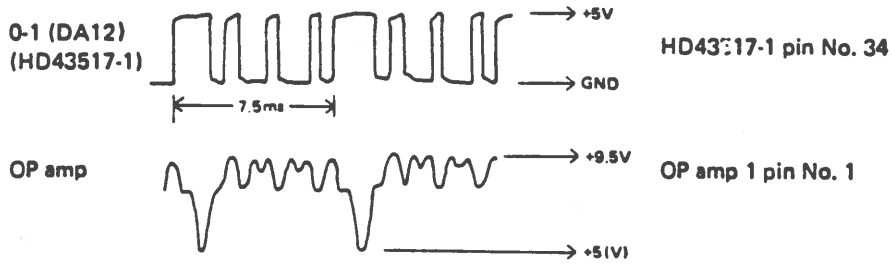

The same waveforms can be observed for lower keyboard at SPLIT mode.

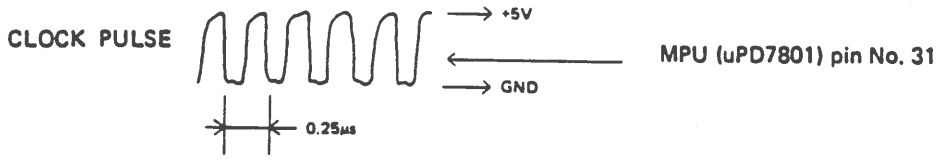

12. BIT COMPENSATE ADJUSTMENT

Adjustment of bit compensate VR

	MODE			TONE	EFFECT		CHECKING POINTS	
	TUNE	TONE SET	SPLIT		SUS	VIBRATOS	CHANNEL 1	CHANNEL 2
UPPER KEYBOARD	OFF	OFF	OFF	TONE PROGRAM 876	ON	OFF	HD43517-1 Pin No. 34	OP amp 1 Pin No. 1
LOWER KEYBOARD	OFF	ON	ON	"	ON	OFF	HD43517-2 Pin No. 34	OP amp 3 Pin No. 1

Upper Keyboard

(1) Set the select switches as above and attach the proves of an oscilloscope at the checking points (the channel 1 pin No. 1 is the triggering channel).

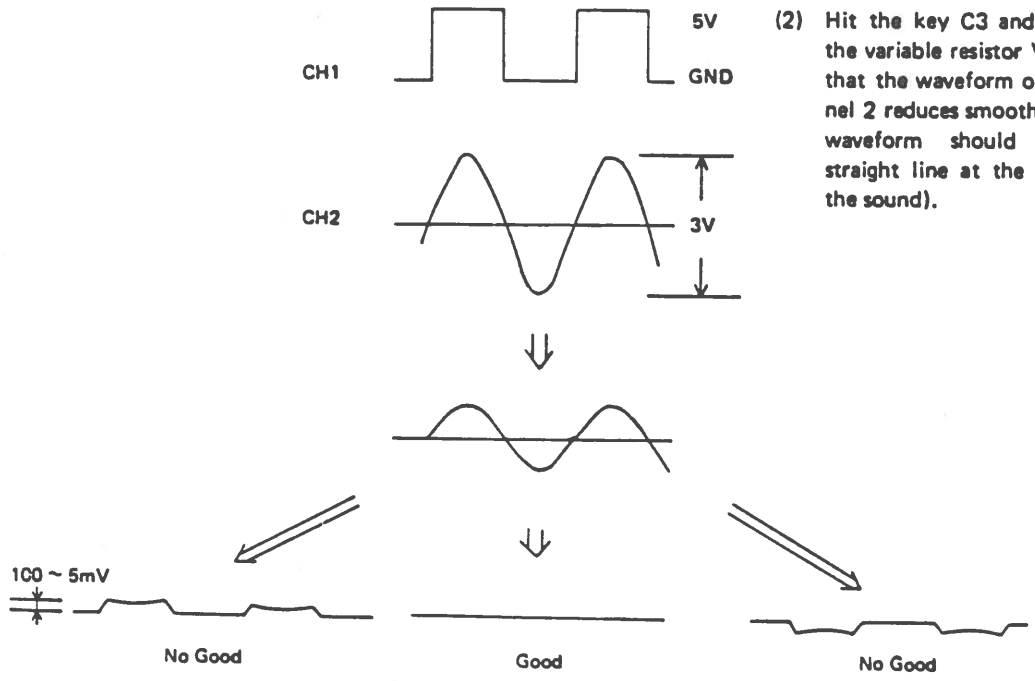

(2) Hit the key C3 and adjust the variable resistor VR1 so that the waveform of channel 2 reduces smoothly (the waveform should be a straight line at the end of the sound).

(3) If the waveform of channel 2 is dim and hard to observe, insert a resistor about 30K ohms between the checking point and the prove in serial.

(4) Lower keyboard's bit compensate circuit can be adjusted by the same method (variable resistor to adjust : VR2).

LOWER KEYBOARD

(1) Set the SW probes in accordance with the preceding table.

(2) Hit the key C_1 and adjust the variable resistor VR_2 so that the waveform of channel reduces smoothly (the waveform should be a straight line at the end of the sound).

CASIO

TECHNICAL NEWS NO.

To: All CT-1000P Customers
Subject: The Nature of Distortion In Electronic Instruments

Two of the byproducts of all electronic musical instruments are "harmonic" and "intermodulation" distortion. On digitally synthesized keyboards, these distortions sound quite harsh because of their characteristic square waves bypassing the digital/analog filters. Our keyboards are designed to 'clip' all normal forms of these distortions before reaching the pre-amp and main amplifier circuits.

What cannot be restricted from being amplified is abnormal distortions. For instance: Program your CT-1000P for either sound "118" or "218". Put the palm of your hand down on the lower keys, depressing say... 8 notes. The pre-amp will be overdriven and consequently you will hear some VERY raunchy harmonics. But if you consider what you were playing, it was the equivalent of playing an 8 note chord on the bass pedals of the organ in St. Patrick's Cathedral. Indeed, distortion would have been prevalent in a real pipe organ, but your ears would have interpreted it as a fluttering versus a crackling noise.

The solution is, of course, that pipe organ musicians do not play chords on the bass pedals. At most, they may play a two note interval at least a fifth apart, or a 'root' bass tone.

Your CT-1000P has an amazing range of sounds; some of which far exceed typical musical applications. As a polyphonic instrument, it will produce chords extremely well on the sounds which normally use chords (middle C organ, piano). It was not designed to produce chords on normally monophonic sounds such as flute, trumpet, organ bass pedals, etc.

CONTENTS

1. Parts List 1

1-1. Main P.C. Board M551-MA1M 1
1-2. P.C. Board M551-AS1M 3
1-3. P.C. Board M551-PS1 4
1-4. Case and other parts 5
1-5. Accessories 7

2. Drawing

2-1. Cross-sectional view of CT-1000P 9
2-2. Inside view of battery housing 10
2-3. Top view of keyboard 11
2-4. P.C. board (for Keyboard) 12
2-5. Top view of switch panel (for Power, Mode, and Arpeggio) 13
2-6. Top view of switch panel (for Tone) 14
2-7. Top view of switch panel (for Effect and Volume) 15
2-8. Top view of P.C. Board M551-CNA 16
2-9. Top view of keyboard chassis 17
2-10. Top view of upper case 18

Notes: 1. Prices and specifications are subject to change with or without prior notice.

2. As to spare parts order/supply, see the "GUIDEBOOK for Spare Parts Supply", a separate publication.

3. On your repair services, see the SERVICE MANUAL, a separate publication.

Item	Code-No.	Parts Name	Standard Name	Q'ty		Price Code		RANK
		MODEL CT-1000P						
		MAIN P.C. Board M551-MA1M PARTS						
☆	2001 1866	LSI	μPD7801G-077	1		BC		A
	2001 3265	LSI	HD43517	2		BM		A
	2001 3273	LSI	HM4334P-3L	1		AP		A
	2100329R	MOS IC	HD14011BP	1		AE		A
☆	21003247	C-MOS IC	HD140508P	2		AG		A
	21003549	C-MOS IC	HD14066BP	4		AF		A
	2100 3662	MOS IC	TC4069UBP	2		AE		A
	2100 3786	C-MOS IC	TC40H004P	1		AE		A
	2100 3816	C-MOS IC	TC4052BP	1		AI		A
	2111 2160	Bipolar IC	SN74LS32N	1		AF		A
	2111 2283	Bipolar IC	SN74LS08N	1		AF		A
	2111 5240	Bipolar IC	SN74LS125AN	1		AF		A
	2120 9244	Monolythic IC	TL082CP	1		AF		A
	2121 0013	OP amp.	NJM4558DD	3		AD		A
☆	2184 1014	Bipolar IC	HD74LS154P	1		AA		A
☆	22003534	Transistor	2SA1015	1		AD		A
☆	2210 5213	Transistor	2SB544E	4		AD		A
	2221 2010	Transistor	2SC2320-E	15		AD		A
	2240 1041	Transistor array	TD62302P	1		AE		A
	2240 5110	FET	2SK30ATM-GR	1		AD		A
	23103273	Zenar diode	RD5.6E (B3)	1		AA		B
	23102862	Zenar diode	RD3.6EB2	1		AA		B
	2310249R	Zenar diode	RD7.5EB3	1		AB		B
☆	2520 2066	Crystal oscillator	PX-1-4002	1		AF		A
	2600 2516	Carbon film resistor (P)	R-25-100-J (100ohm, ¼W, ±5%)	1		N/A		C
	2601 6487	Carbon film resistor	R-25-10K-G (10Kohm, ¼W, ±2%)	4		↓		C
☆	2601 6495	Carbon film resistor	R-25-13K-G (13Kohm, ¼W, ±2%)	2				C
	2601 6509	Carbon film resistor	R-25-20K-G (20Kohm, ¼W, ±2%)	2				C
☆	2601 6517	Carbon film resistor	R-25-91K-G (91Kohm, ¼W, ±2%)	2				C
	2720 1741	Module resistor	MS3334 (33Kohm x 4)	1		AB		C
	2720 1750	Module resistor	MS3337 (33Kohm x 7)	2		AB		C
	2720 1881	Module resistor	MS3335 (33Kohm x 5)	1		AB		C
	2720 1890	Module resistor	MS3336 (33Kohm x 6)	1		AB		C

Notes: ☆ - The parts newly employed
Q'ty – Quantity used per unit
• – The minimum order/supply quantity

Rank A : Essential
B : Stockrecommended
C : Others
X : No stock recommended

CT-1000P Parts List

Item	Code No.	Parts Name	Standard Name	Q'ty	Price Code	RANK
	2760 2029	Semi-Fixed Resistor	VBK4-1810K	2	AB	B
	2804 4925	Electrolytic capacitor	50RE1 (1μF, 50V)	1	N/A	C
	2804 5093	Electrolytic capacitor	25RE33 (33μF, 25V)	3		C
	2804 5271	Electrolytic capacitor	25RE47 (47μF, 25V)	1		C
☆	2804 5328	Electrolytic capacitor	16RE330 (330μF, 16V)	1		C
	2804 9021	Electrolytic capacitor	25RNBBP10 (10μF, 25V)	2		C
	2819 0069	Ceramic capacitor	HE70SJ-YF103Z	13		C
	2819 0115	Ceramic capacitor	HE40SJSL330K	2		C
☆	2819 0123	Ceramic capacitor	HE40SJCH200J	2		C
	2830 6032	Mylar capacitor	AMZ-223K50	2		C
	2830 6121	Mylar capacitor	AMZ-472K50	2		C
☆	2830 6156	Mylar capacitor	AMZ-563K50	2		C
	2890 1038	Tantalum capacitor	CS15E1VOR1M1S	1		C
	3060 6019	Ladder network	EXK-S10L0025C	2	AO	A
	3500 2626	PCB connector	IL-3P-S3EN2	1	N/A	X
☆	3500 3436	PCB connector	2P-S3EN2	2	AB	X
☆	3500 7041	PCB connector	5229-17CPB	1	—	X
☆	3510 2582	Pin assembly 6P	5277-06A	1	—	X
☆	3511 0801	PCB connector	5229-27CPB	1	—	X
	3841 0059	Filter	R12-8097A	2	AE	C
	2301 3002	Diode	DS-442	9	AA	C
	2600 7313	Carbon film resistor	R-25-10K-J (10Kohm, ¼W, ±5%)	23	N/A	C
☆	2600 9715	Carbon film resistor	R-25-100K-J (100Kohm, ¼W, ±5%)	3		C
	2600 7917	Carbon film resistor	R-25-18K-J (18Kojm, ¼W, ±5%)	2		C
	2600 8514	Carbon film resistor	R-25-33K-J (33Kohm, ¼W, ±5%)	10		C
	2601 0918	Carbon film resistor	R-25-330K-J (330Kohm, ¼W, ±5%)	2		C
	2600 6716	Carbon film resistor	R-25-5.6K-J (5.6Kohm, ¼W, ±5%)	2		C
	2600 9111	Carbon film resistor	R-25-56K-J (56Kohm, ¼W, ±5%)	2		C
	2600 2516	Carbon film resistor	R-25-100-J (100ohm, ¼W, ±5%)	4		C
	2600 3717	Carbon film resistor	R-25-330-J (330ohm, ¼W, ±5%)	4		C
	2600 4314	Carbon film resistor	R-25-560-J (560ohm, ¼W, ±5%)	2		C
	2600 4918	Carbon film resistor	R-25-1K-J (1Kohm, ¼W, ±5%)	27		C
	2601 2112	Carbon film resistor	R-25-1M-J (1Mohm, ¼W, ±5%)	2		C
	2600 8115	Carbon film resistor	R-25-22K-J (22Kohm, ¼W, ±5%)	1		C
	2601 0519	Carbon film resistor	R-25-220K-J (220Kohm, ¼W, ±5%)	2		C
	2600 8310	Carbon film resistor	R-25-27K-J (27Kohm, ¼W, ±5%)	1		C
	2600 6112	Carbon film resistor	R-25-3.3K-J (3.3Kohm, ¼W, ±5%)	7		C
☆	2600 9316	Carbon film resistor	R-25-68K-J (68Kohm, ¼W, ±5%)	1		C

Notes: ☆ – The parts newly employed
Q'ty – Quantity used per unit
• – The minimum order/supply quantity

Rank A : Essential
B : Stockrecommended
C : Others
X : No stock recommended

CT-1000P Parts List

Item	Code No.	Parts Name	Standard Name	Q'ty	Price Code	RANK
	2600 5116	Carbon film resistor	R-25-1.2K-J (12Kohm, ¼W, ±5%)	4	N/A	C
	2600 1919	Carbon film resistor	R-25-56-J (56ohm, ¼W, ±5%)	8		C
	2600 9511	Carbon film resistor	R-25-82K-J (82Kohm, ¼W, ±5%)	6		C
	2601 6231	Carbon film resistor	R-25-25K-J (25Kohm, ¼W, ±5%)	4		C
	2601 5111	Carbon film resistor	R-25-50K-J (50Kohm, ¼W, ±5%)	6		C
	2601 6223	Carbon film resistor	R-25-24K-J (24Kohm, ¼W, ±5%)	2		C
		P.C. Board M551-AS1M PARTS				
	2120 8477	Hybrid IC	STK4017	1	AP	A
	2121 0013	OP amp.	NJM455800	1	AD	A
	2221 2010	Transistor	2SC2320-E	1	AD	A
	2240 5110	FET	2SK30ATH-GR	1	AD	A
	2620 2515	Carbon film resistor (P)	R-50X-100-J (100ohm, ½W, ±5%)	2	N/A	C
	2804 4887	Electrolytic capacitor (V)	50RE100 (100μF, 50V)	2		C
	2804 4925	Electrolytic capacitor (V)	50RE1 (1μF, 50V)	6		C
	2804 4984	Electrolytic capacitor (V)	25RE10 (10μF, 25V)	1		C
	2804 5093	Electrolytic capacitor (V)	25RE33 (33μF, 25V)	1		C
	2804 5158	Electrolytic capacitor (V)	35RE10 (10μF, 35V)	1		C
	2804 5204	Electrolytic capacitor (V)	25RE1000 (1000μF, 25V)	1		C
	2804 5263	Electrolytic capacitor (V)	25RE4P7 (4.7μF, 25V)	2		C
☆	2804 5336	Electrolytic capacitor (V)	50RE2R2 (2.2μF, 50V)	1		C
☆	2804 5557	Electrolytic capacitor	25RE330 (330μF, 25V)	1		C
	2819 0069	Ceramic capacitor	HE/0SJ-YF103Z	1		C
	2819 0131	Ceramic capacitor	HE40SJL470K	1		C
☆	2819 0140	Ceramic capacitor	HE60SJYD222M	1		C
	2830 6130	Mylar capacitor	AMZ-473K50	1		C
	3500 3339	PCB connector	IL-6P-S3FP2	1		X
	3500 3444	PCB connector	IL-2P-S3FP2	1		X
☆	3500 3461	3P connector M51	IL-3P20-M51	1		X
☆	3500 3479	2P connector M51A	IL-2P17-M51	1		X
☆	3520 7023	6P connector M51B	5239-6P55-M51	1		X
	3612 0070	Jack Sustain Pedal	HLJ-4305-01-100	2	AG	B
	3612 0088	Jack Volume Pedal	HLJ-4305-01-090	1	AG	B
	3612 0096	Jack Headphone	HLJ-4305-01-040	1	AG	B
	5560 0368	Wire band	T-185	1	—	X
☆	6901 3550	Heat sink	M4653-1	1	—	X
	2301 3002	Diode	DS-442	1	AA	C

Notes: ☆ – The parts newly employed
Q'ty – Quantity used per unit
• – The minimum order/supply quantity

Rank A : Essential
B : Stockrecommended
C : Others
X : No stock recommended

CT-1000P Parts List

Item	Code No.	Parts Name	Standard Name	Q'ty	Price Code	RANK
	2600 7313	Carbon film resistor	R-25-10K-J (10Kohm, ¼W, ±5%)	4	N/A	C
	2600 9715	Carbon film resistor	R-25-100K-J (100Kohm, ¼W, ±5%)	3		C
	2600 7712	Carbon film resistor	R-25-15K-J (15Kohm, ¼W, ±5%)	1		C
	2601 5715	Carbon film resistor	R-25-4.7J (4.7ohm, ¼W, ±5%)	1		C
	2600 4918	Carbon film resistor	R-25-1K-J (1Kohm, ¼W, ±5%)	5		C
	2601 2112	Carbon film resistor	R-25-1M-J (1Mohm, ¼W, ±5%)	1		C
	2600 5710	Carbon film resistor	R-25-2.2K-J (2.2Kohm, ¼W, ±5%)	1		C
	2600 8913	Carbon film resistor	R-25-47K-J (47Kohm, ¼W, ±5%)	2		C
	2600 7518	Carbon film resistor	R-25-12K-J (12Kohm, ¼W, ±5%)	1		C
	2600 9910	Carbon film resistor	R-25-120K-J (120Kohm, ¼W, ±5%)	1		C
	2600 6511	Carbon film resistor	R-25-4.7K-J (4.7Kohm, ¼W, ±5%)	4		C
	2600 5914	Carbon film resistor	R-25-2.7K-J (2.7Kohm, ¼W, ±5%)	1		C
	2600 4110	Carbon film resistor	R-25-470-J (470ohm, ¼W, ±5%)	1		C
	2601 8111	Carbon film resistor	R-25-2.2M-J (2.2Mohm, ¼W, ±5%)	1		C
	2600 9511	Carbon film resistor	R-25-82K-J (82Kohm, ¼W, ±5%)	2		C
	2600 1111	Carbon film resistor	R-25-27J (27ohm, ¼W, ±5%)	1		C
☆						
		P.C. Board M551-PSI PARTS				
	2120 8647	Monolythic IC	μPC78M15H	1	AG	A
	2221 2010	Transistor	2SC2320-E	2	AD	A
	2230 3333	Transistor	2SD612K-E	2	AD	A
	2301 3002	Diode	DS442	2	AA	C
	23013011	Diode	DS135D	2	AA	C
	2301 4025	Diode	DSA26B	2	AB	C
	23103273	Zenar diode	RD5.6E (B3)	2	AA	B
	2600 2516	Carbon film resistor (P)	R-25-100-J (100ohm, ¼W, ±5%)	1	N/A	C
	2600 3512	Carbon film resistor (P)	R-25-270-J (270ohm, ¼W, ±5%)	1		C
	2620 4119	Carbon film resistor (P)	R-50X-470-J (470ohm, ½W, ±5%)	1		C
	2620 4313	Carbon film resistor (P)	R-50X-560-J (560ohm, ½W, ±5%)	1		C
	2622 1013	Carbon film resistor	R-75X-1-J (1ohm, ¾W, ±5%)	1		C
☆	2710 4011	Wiring resistor	RG82L, 0.68K	1		C
	2804 4801	Electrolytic capacitor (V)	16RE2200 (2,200μF, 16V)	1		C
	2804 4925	Electrolytic capacitor (V)	50RE1 (1μF, 50V)	1		C
	2804 4984	Electrolytic capacitor (V)	25RE10 (10μF, 25V)	1		C
	2804 5026	Electrolytic capacitor (V)	50RE3R3 (3.3μF, 50V)	1		C
	2804 5239	Electrolytic capacitor (V)	16RE470 (470μF, 16V)	1		C
☆	2804 5549	Electrolytic capacitor	50RE1000 (1000μF, 50V)	1		C

Notes: ☆ – The parts newly employed
Q'ty – Quantity used per unit
• – The minimum order/supply quantity

Rank A : Essential
B : Stockrecommended
C : Others
X : No stock recommended

CT-1000P Parts List

Item	Code No.	Parts Name	Standard Name	Q'ty		Parts List	No.	RANK
	2808 0107	Electrolytic capacitor (V)	16RE22 (22μF, 16V)	1		N/A		C
	2830 7012	Mylar capacitor	PME265MB522	1		N/A		C
	3020 2104	Noise filter	TF2317C-601Y2R5	1		AG		C
☆	3511 0810	Print plate connector	5273-06A	1		—		X
☆	3631 0049	UL fuse	UL-TSC-1A	1		AC		A
☆	36310031	UL fuse	MT4 1, 5A	1		AC		A
	3640 2331	Fuse holder clip	UF-0033	4		AA		X
☆								
☆								
		Case and other parts						
☆	6901 3120	Upper case sub ass'y	M2413*1			BN	1	C
☆	6901 3030	Lower case sub ass'y	M2412*1	1		BN	2	C
☆	6901 3560	Side board R	M1303-1	1		AL	3	X
☆	6901 3570	Side board L	M1304-1	1		AL	4	X
☆	69012070	Battery cover	M4618-2	1		AJ	5	B
☆	6901 2500	Battery housing	M4619-1	1		—	6	X
	3500 3495	2P connector M51C	IL-2P29-M51	1		—	7	X
	3840 2293	Battery box	UM-3X3-33-3	1		—	8	X
	6900 9290	Key A (Ivory)	M3404-1	5		AH	9	C
	6900 9300	Key B, E (Ivory)	M3405-1	10		AH	10	C
	6900 9310	Key C, F (Ivory)	M3406-1	10		AH	11	C
	6900 9320	Key D (Ivory)	M3407-1	5		AH	12	C
	6900 9330	Key G (Ivory)	M3408-1	5		AH	13	C
	6900 9340	Key S (Ivory)	M3409-1	1		AH	14	C
	6900 9350	Key (Ebony)	M3410-1	25		AH	15	C
	6900 9360	KB spring	M4419-1	61		AA	16	C
☆	6901 1070	Keyboard stopper 61	M4413-1	1		—	17	X
☆	43070148	P.C. Board M425-KY3M	M3462A-1	1		AF	18	X
	4307 0082	P.C. Board M516-KY2M	M2351-1	1		AJ	19	X
	4307 0083	P.C. Board M516-KY1M	M2350-1	1		AJ	20	X
	6900 1390	P.C. Joiner A	M400033-1	2		AA	21	C
	6900 8610	P.C. Joiner K	M4451-1	1		AA	22	C
	6901 0190	P.C. Joiner L	M4532-1	1		AD	23	C
☆	3720 9066	P.C. Joiner KY	PC-UV-17-120	1		AD	24	C
	2301 3002	Diode	DS-442	61		AA		C
☆	3500 3487	2P connector M51B	IL-2P33-M51	1		—		X
	3660 3011	Lug terminal	1.25-4	2		—		X
	3660 3046	Lug terminal	2-4	1		—		X
	3830 1080	Speaker	EAS-10P224S	1		AU	25	B

Notes: ☆ – The parts newly employed
Q'ty – Quantity used per unit

Rank A : Essential
B : Stockrecommended
C : Others
X : No stock recommended

C7

CT-1000P Parts List

Item	Code No.	Parts Name	Standard Name	Q'ty		Price Code	No.	RANK
☆	5540 0504	Nylon clip	SL-3N	1		—		X
	5560 0368	Insulation band	T-18S	1		—		X
	6900 3110	Speaker felt	M4298-1	1		—		X
☆	6900 8631	Rubber bush	M4432A-1	1		—		X
☆	6901 2790	PE tape	M4659-1	3		—		X
	2770 6495	Volume	K16110007E-10KB	1		AE	26	B
	3410 4051	Rotary switch	SRS101R	1		AO	27	B
☆	6901 3240	Key top 51	M3573-1	6		AC	28	X
☆	6901 3390	Key top 51 (RECORD)	M3573-16	1		AC	29	X
☆	6901 3400	Lever 51	M4647-1	7		AA	30	X
☆	6901 3450	Switch panel A (for Power, Mode and Arpeggio)	M2388-1	1		AF	31	X
☆	6901 3250	Key top 51 (1)	M3573-2	1		AC	32	X
☆	6901 3260	Key top 51 (2)	M3573-3	1		AC	33	X
☆	6901 3270	Key top 51 (3)	M3573-4	1		AC	34	X
☆	6901 3280	Key top 51 (4)	M3573-5	1		AC	35	X
☆	6901 3290	Key top 51 (5)	M3573-6	1		AC	36	X
☆	6901 3300	Key top 51 (6)	M3573-7	1		AC	37	X
☆	6901 3310	Key top 51 (7)	M3573-8	1		AC	38	X
☆	6901 3320	Key top 51 (8)	M3573-9	1		AC	39	X
☆	6901 3330	Key top 51 (9)	M3573-10	1		AC	40	X
☆	6901 3340	Key top 51 (0)	M3573-11	1		AC	41	X
☆	6901 3350	Key top 51 (FEET)	M3573-12	1		AC	42	X
☆	6901 3360	Key top 51 (ENVELOPE)	M3573-13	1		AC	43	X
☆	6901 3370	Key top 51 (MODULATION)	M3573-14	1		AC	44	X
☆	6901 3380	Key top 51 (PROGRAM/PRESET)	M3573-15	1		AC	45	X
☆	6901 3400	Lever 51	M4647-1	14		AA	46	X
☆	6901 3460	Switch panel B (for Tone)	M2389-1	1		AF	47	X
	2770 6495	Volume	K16110007E-10KB	1		AE	48	B
☆	6901 3240	Key top 51	M3473-1	4		AC	49	X
☆	6901 3400	Lever 51	M4647-1	4		AA	50	X
☆	6901 3470	Switch panel C (for Effect and Volume)	M2390-1	1		AD	51	X
☆	3720 9015	PCB joiner M51A	PC-UV-27-180	1		AE	52	C
☆	3720 9023	PCB joiner M51B	PC-JVU-11-60	1		AC	53	C
☆	3720 9031	PCB joiner M51C	PC-JVU-17-20	1		AB	54	C
☆	3720 9040	PCB joiner M51D	PC-JVU-6-7B	1		AB	55	C
☆	3720 9058	PCB joiner M51E	PC-JVU-10-20	1		AB	56	C

Notes: ☆ – The parts newly employed
Q'ty – Quantity used per unit
• – The minimum order/supply quantity

Rank A : Essential
B : Stockrecommended
C : Others
X : No stock recommended

CT-1000P Parts List

Item	Code No.	Parts Name	Standard Name	Q'ty		Price Code	No.	RANK
☆	6900 6080	Felting seal KB	M4405-1	1		—	59	X
	6900 9130	Switch rubber C	M3412-1	4		AD	60	C
	6900 9140	Switch rubber D	M3413-1	1		AD	61	C
	6900 9162	Guide felt A	M34288-1	4		—	62	X
	6900 9172	Guide felt B	M3429B-1	1		—	63	X
☆	6901 1080	KB chassis 61	M2295-1	1		—	64	X
	6901 1090	Stopper felt 61	M3411-1	1		—	65	X
☆	6901 1520	Felting [illegible] Q	M4600-1	1		—	66	X
☆	6901 2931	Stopper rubber 61	M3589A-2	1		—	67	X
	3440 5263	PW switch	SDE3S-M11601	1		AH		B
	3660 3046	Lug terminal	2-4	1		—		X
	3670 5019	Receptacle	NC-173	1		AD		C
	5560 0368	Insulation band	T-18S	2		—		X
	2301 3002	Diode	DS-442	25		AA		C
	2320 7044	LED	SL-1321	1		AP	68	A
☆	2320 7095	LED	SLP1618	10		AB	69	A
☆	3500 3452	6P connector M51C	IL-6P45-M51	1		—		X
☆	4307 0220	P.C. Board M551-LD2	M2398-2	1		—		X
☆	4307 0230	P.C. Board M551-LD3	M3614-1	1		—		X
☆	4307 0240	P.C. Board M551-SW	M3614-2	1		—		X
☆	6901 3220	Acryl panel	M3572-1	1		AJ	70	X
☆	6901 3230	Volume knob	M3452-4	3		AC	71	X
	6901 3410	Key contact rubber A	M3583-1	1		AD		C
	6901 3420	Key contact rubber B-1	M3584-1	1		AC		C
	6901 3430	Key contact rubber B-2	M4651-1	1		AC		C
	6901 3440	Key contact rubber C	M4652-1	1		AC		C
☆	6901 4030	VR spacer	M4751-1	3		—		X
	3000 5112	Power transformer	TE-51-2M1	1		BG	72	C
☆	3520 7015	6P connector M51A	5265-6P10-M51	1		—		X
	36001160	Voltage selector	ESE-371	1		AE	73	C
	3660 3011	Lug terminal	1.25-4	1		N/A		X
	3660 3046	Lug terminal	2-4	1				X
	5560 0368	Insulation band	T-18S	6				X
		ACCESSORIES						
	37002763	Power cord	UC-907-J01 (U.S.A.)	1		AO		X

Notes: ☆ – The parts newly employed
Q'ty – Quantity used per unit

Rank A : Essential
B : Stockrecommended
C : Others
X : No stock recommended

CT-1000P Parts List

Item	Code No.	Parts Name	Standard Name	Q'ty		Parts List		RANK
	6901 4060	Dust cover	M3618-1	1		AK		X
	6900 7820	Note stand	M3373-1	1		AK		X

Notes: ☆ – The parts newly employed
Q'ty – Quantity used per unit

Rank A : Essential
B : Stockrecommended
C : Others
X : No stock recommended

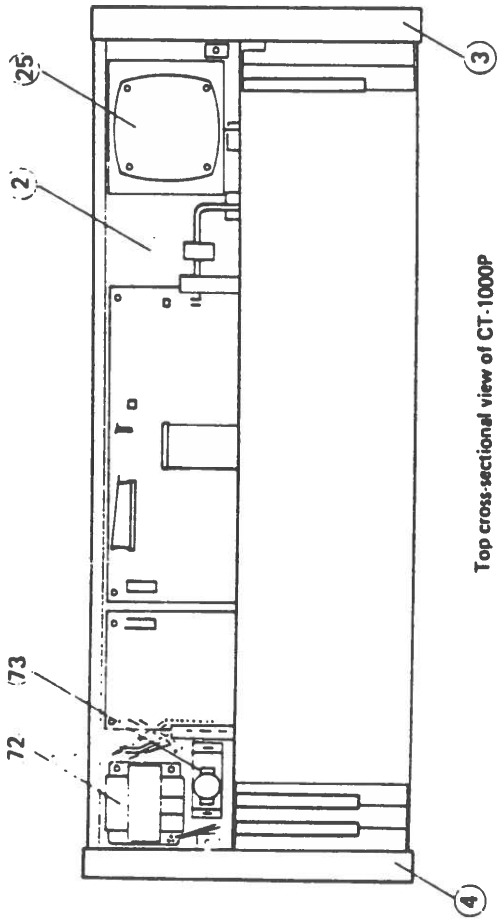

Top cross-sectional view of CT-1000P

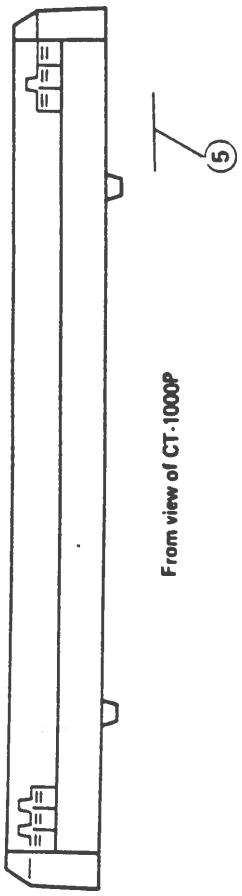

From view of CT-1000P

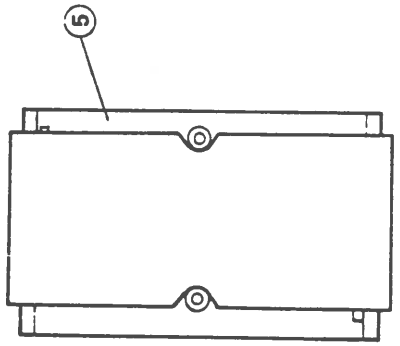

Inside view of battery cover

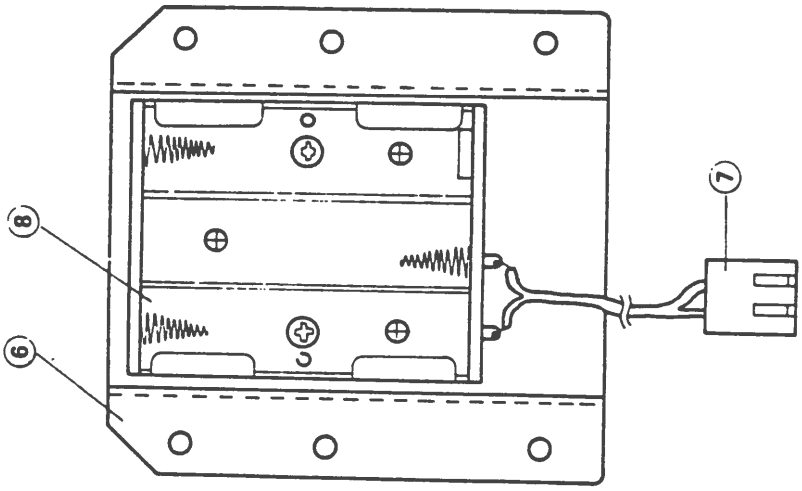

Inside view of battery housing

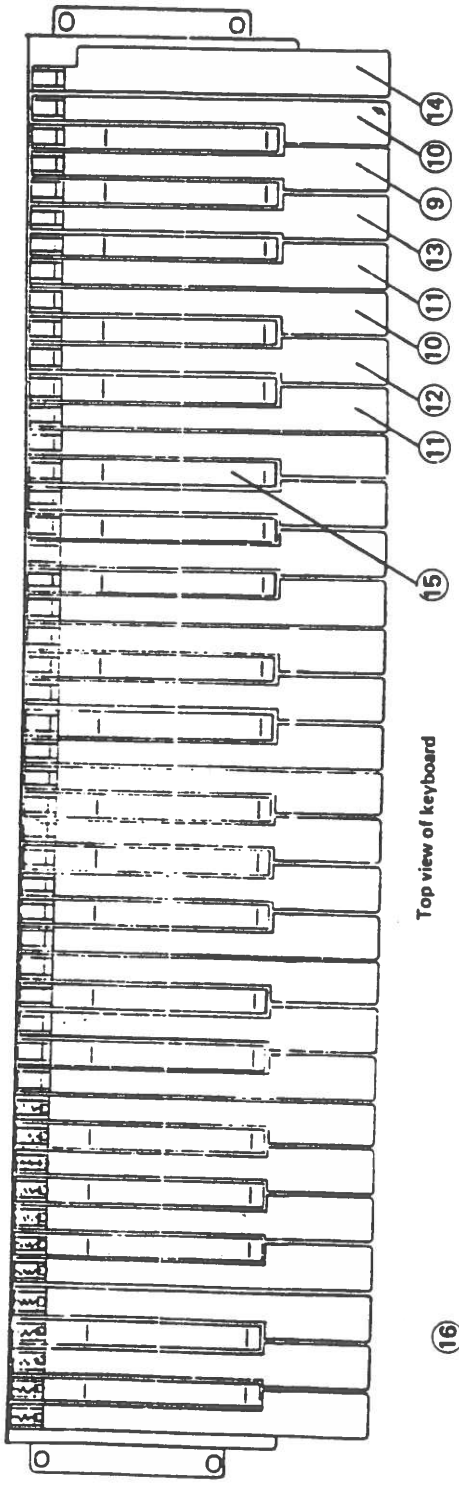

Top view of keyboard

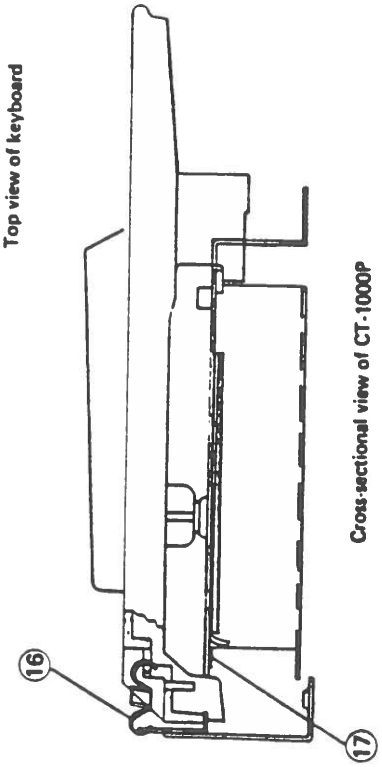

Cross-sectional view of CT-1000P

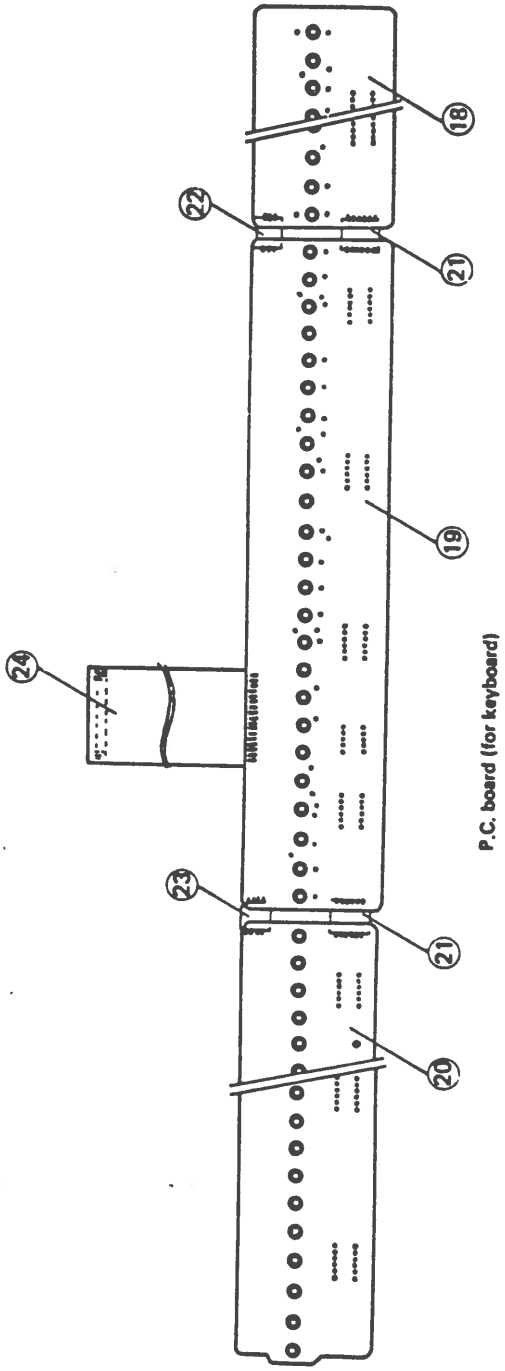

P.C. board (for keyboard)

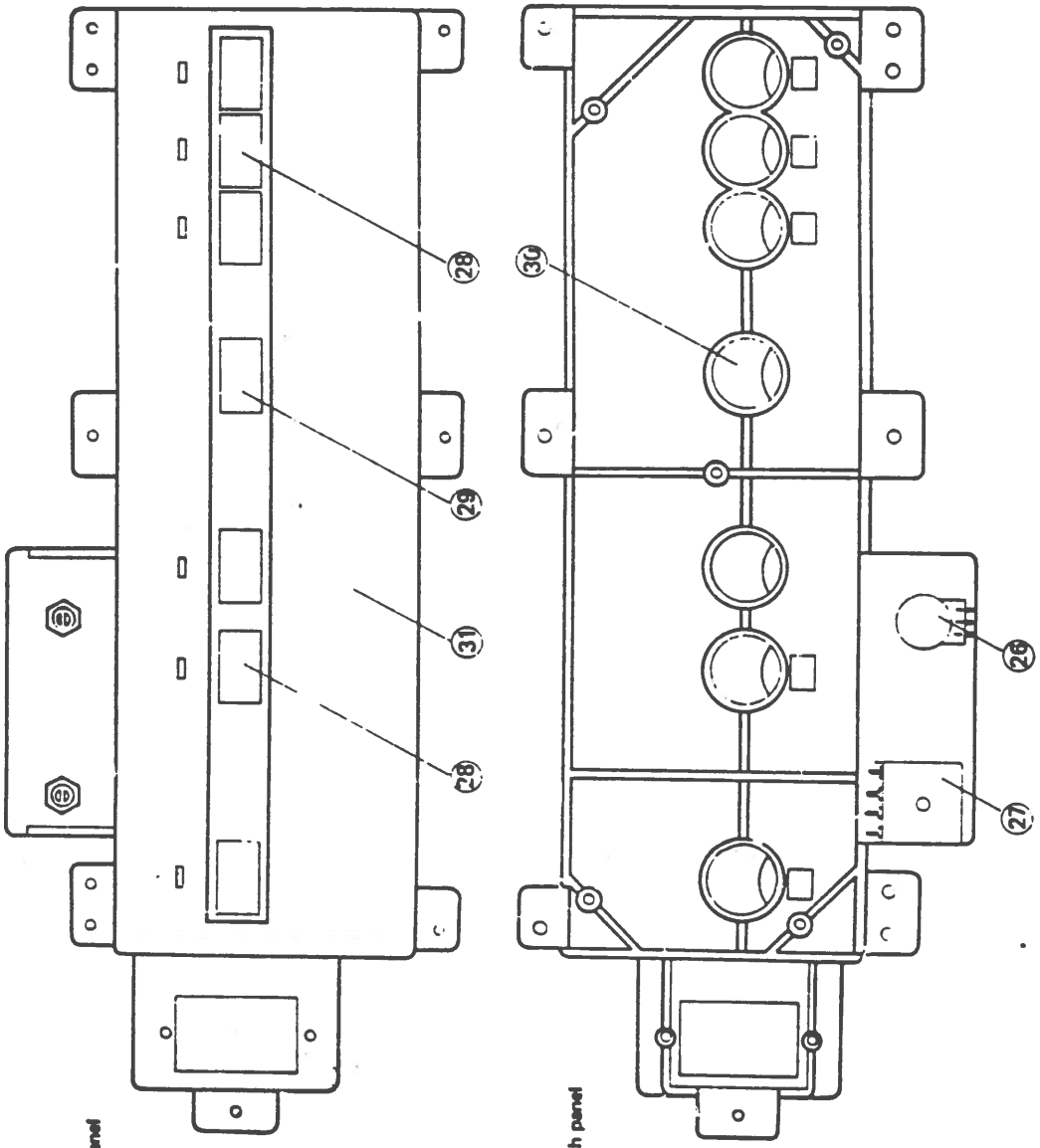

Top view of switch panel (for POWER, MODE and 'EGGIO)

Inside view of switch panel

D1

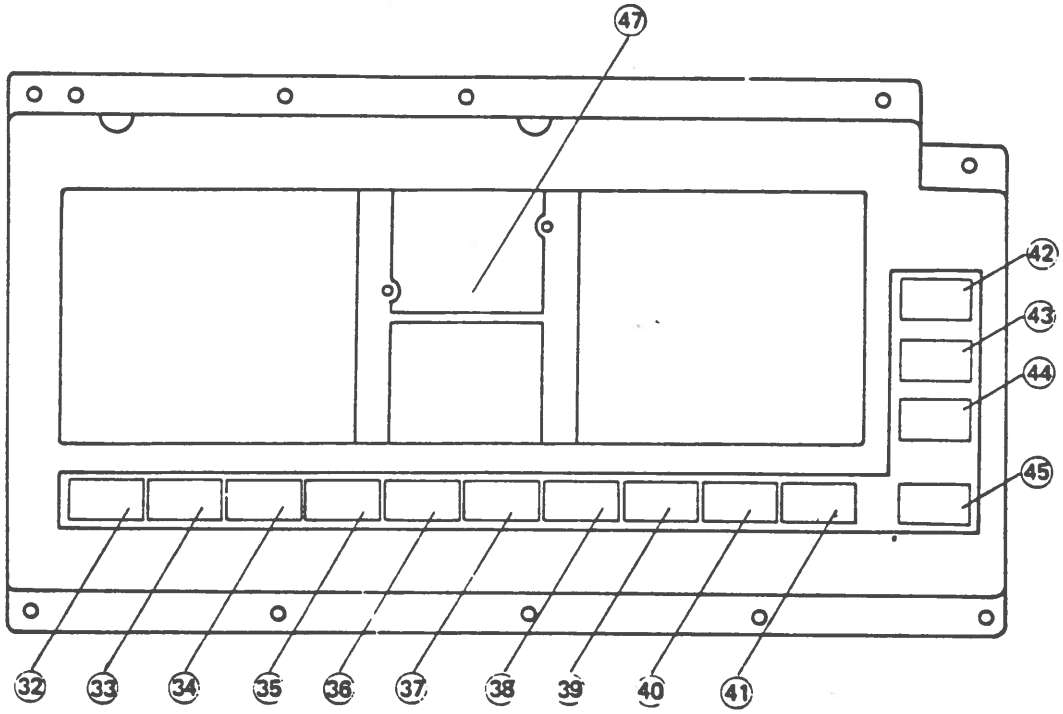

Top view of switch panel (for TONE)

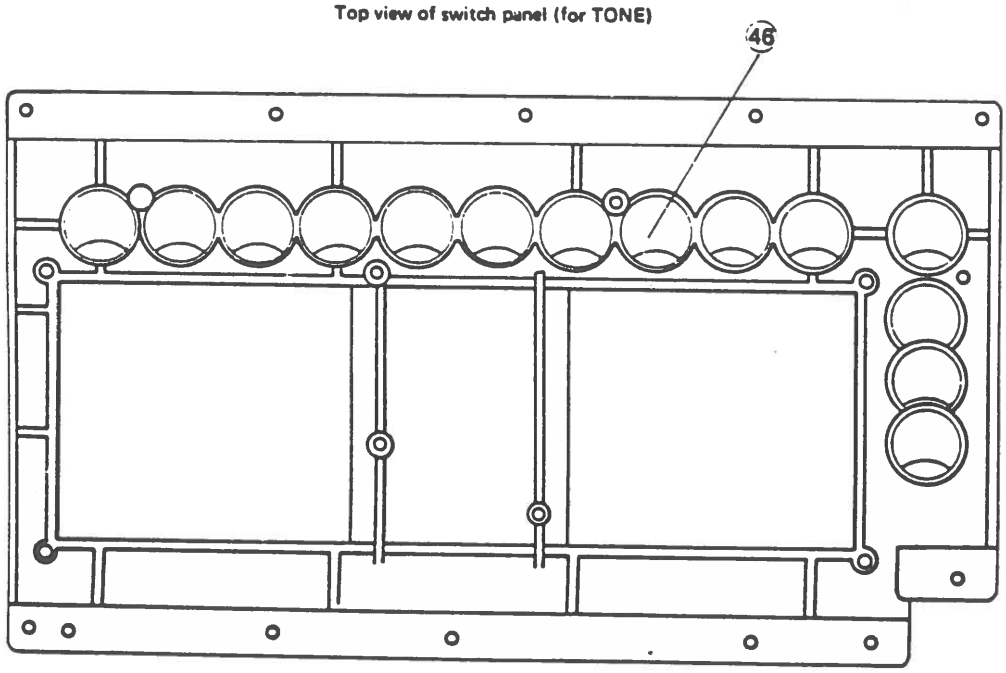

Inside view of switch panel

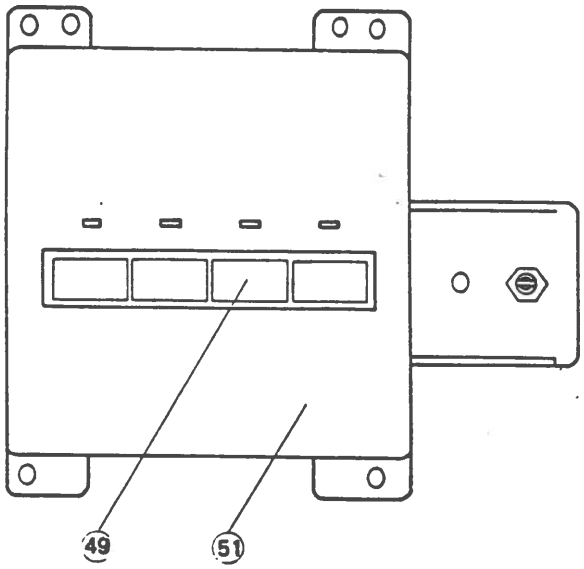

Top view of switch panel (for EFFECT and VOLUME)

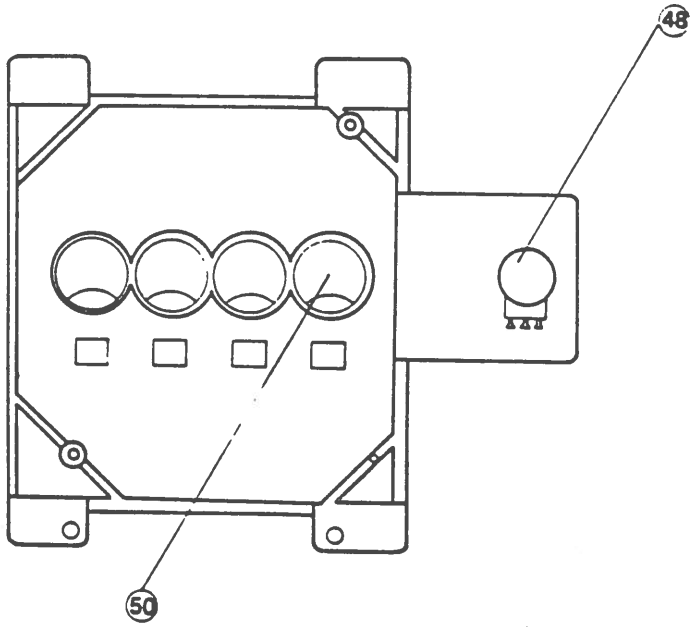

Inside view of switch panel

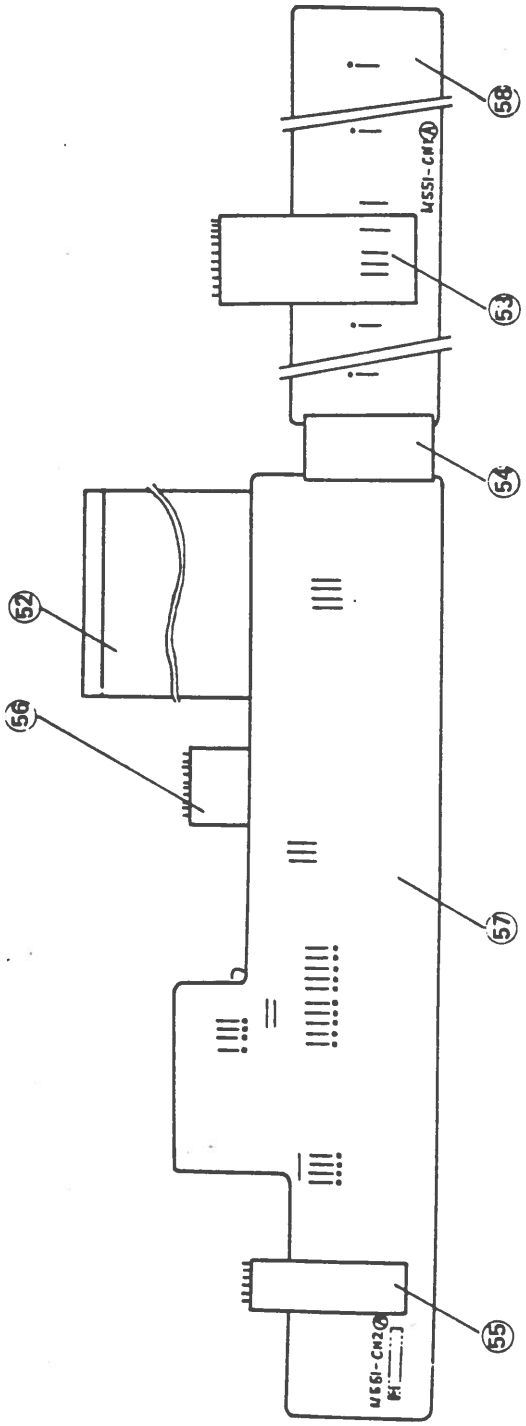

Top view of P.C. board M551-CNA

D4

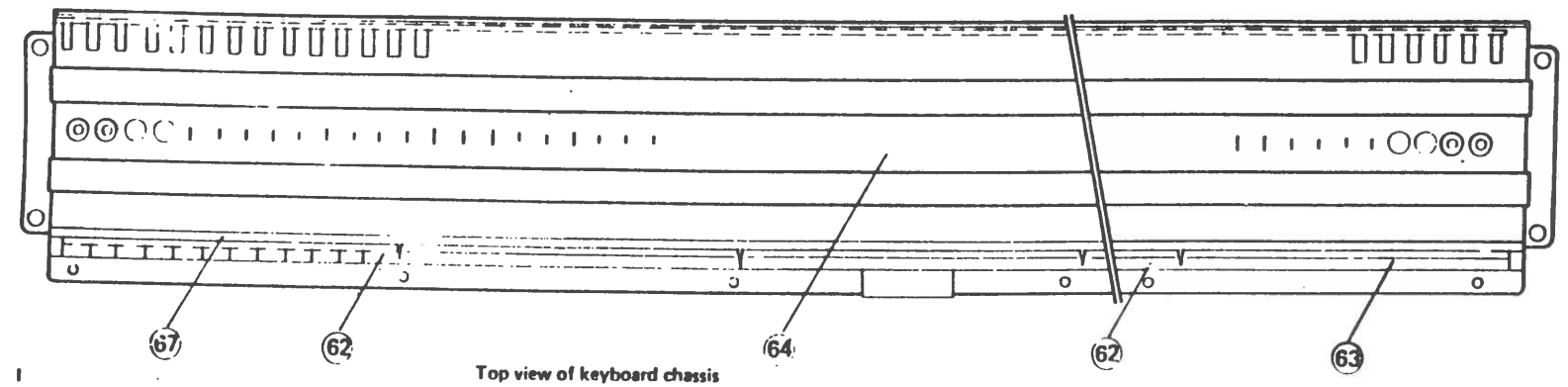

Top view of keyboard chassis

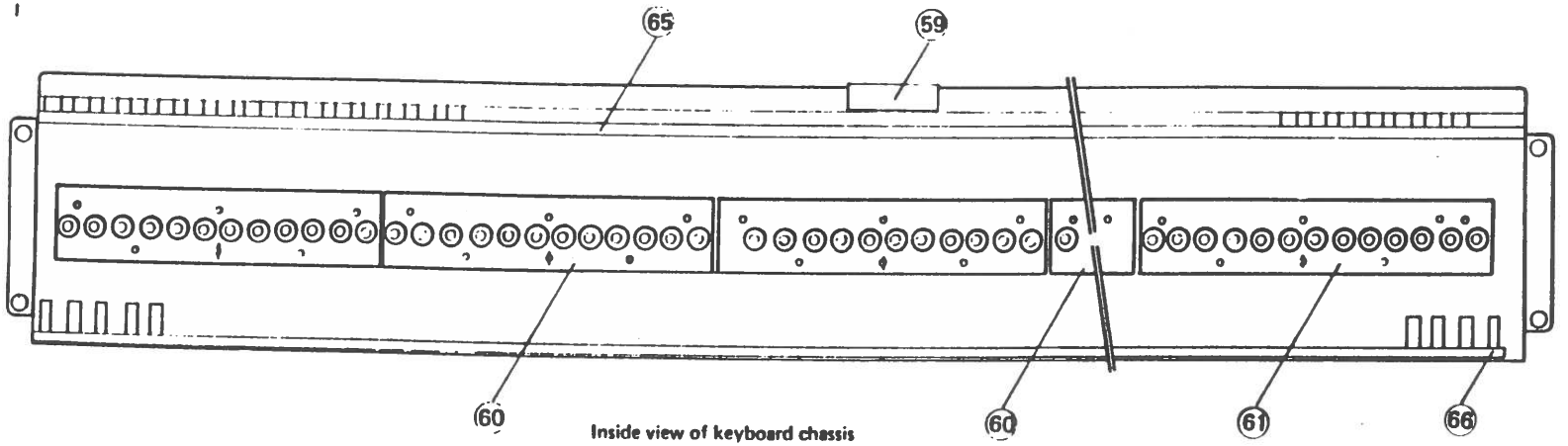

Inside view of keyboard chassis

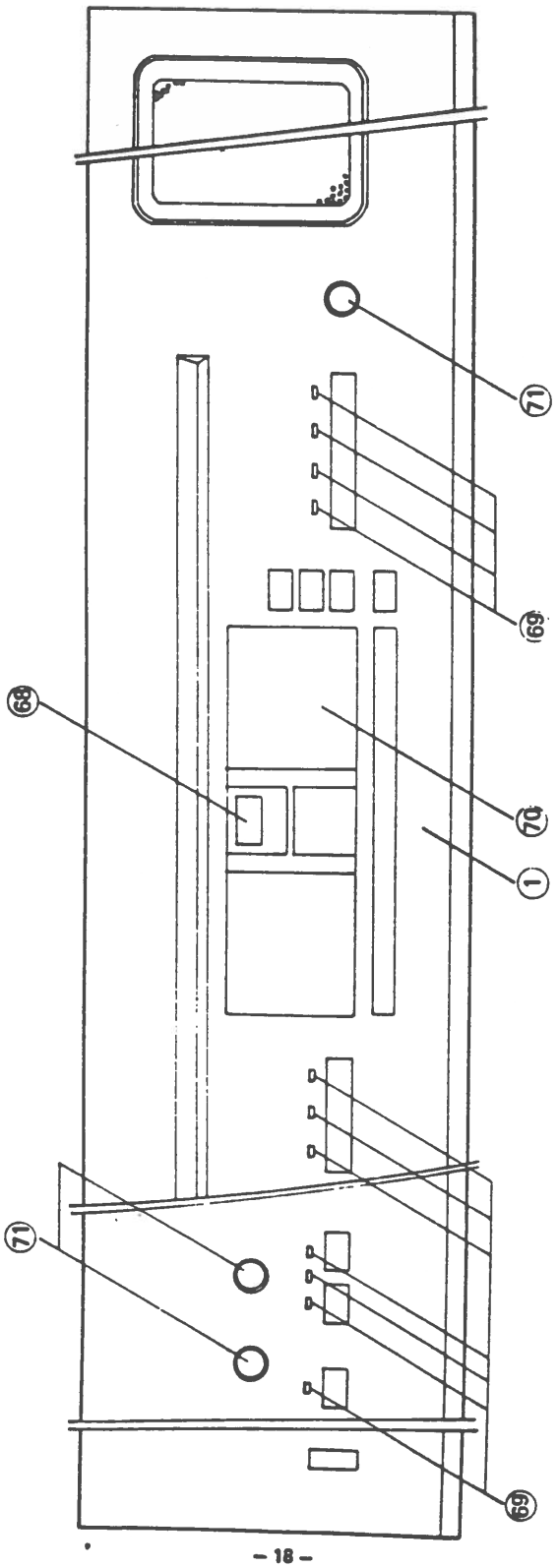

Top view of upper case

D6

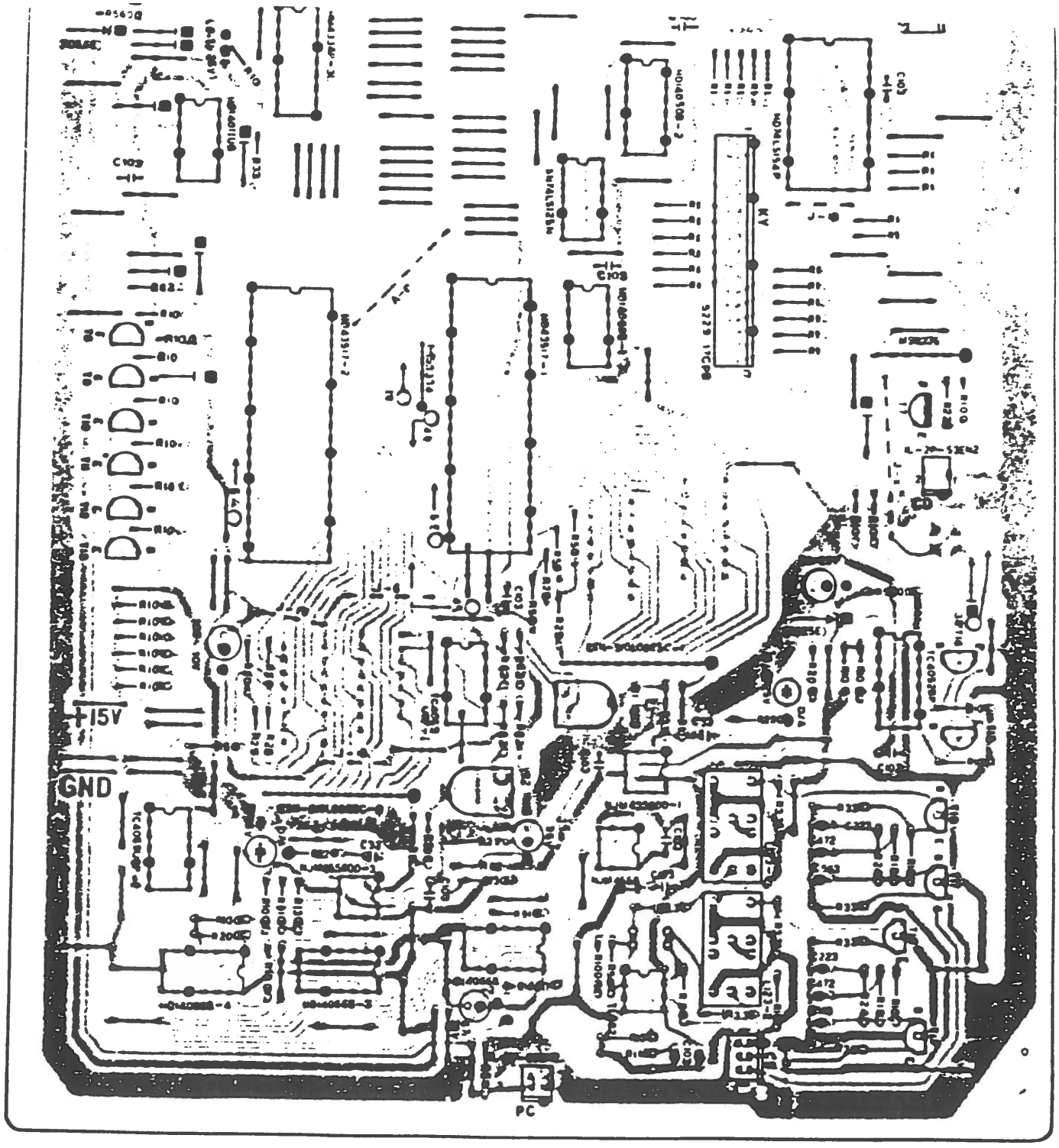
+15V
GND

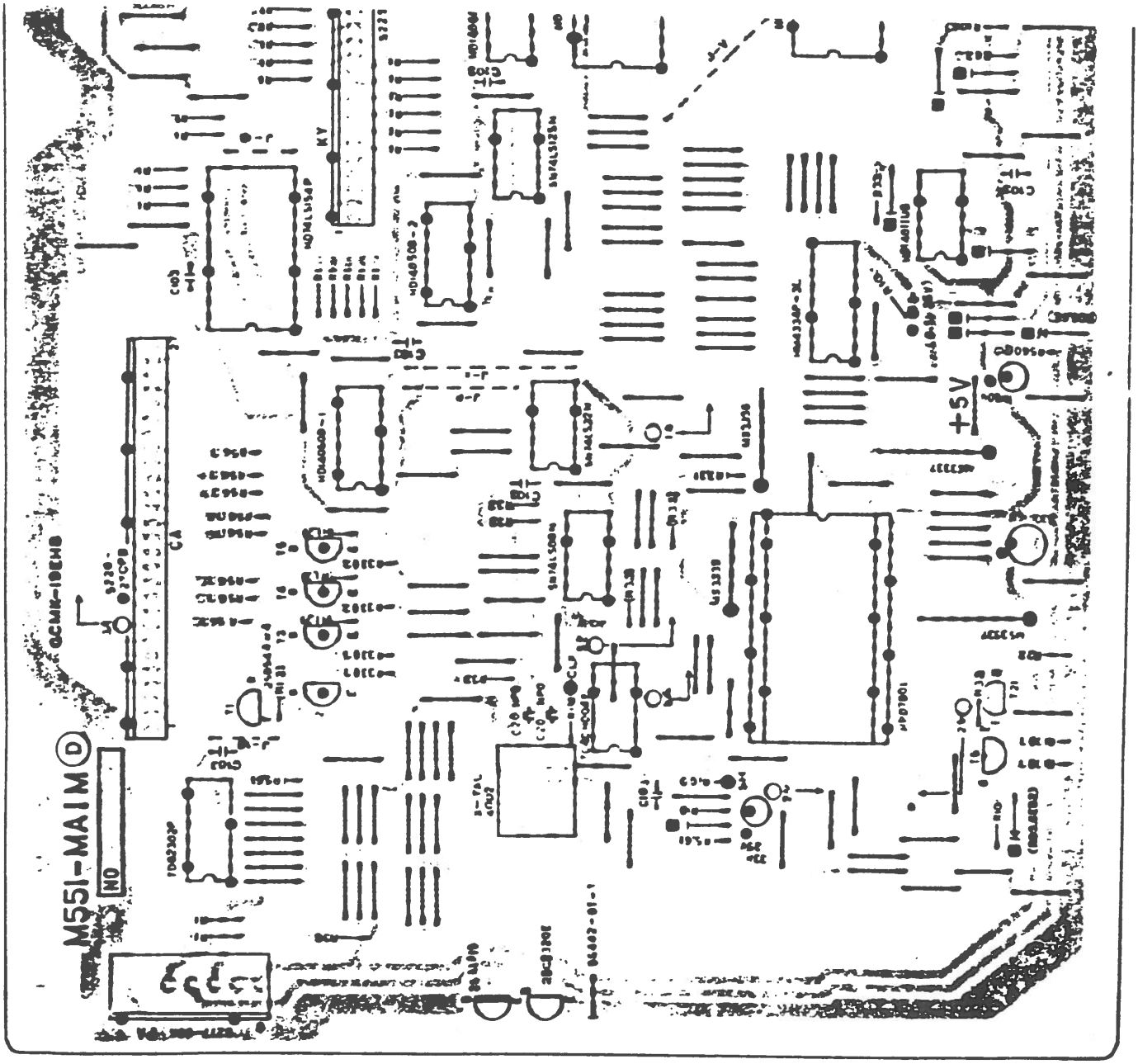
M55I-MAIM
+5V

CIRCUIT DIAGRAM
PCB NO. M551 MA1M

CT-1000P Service Manual

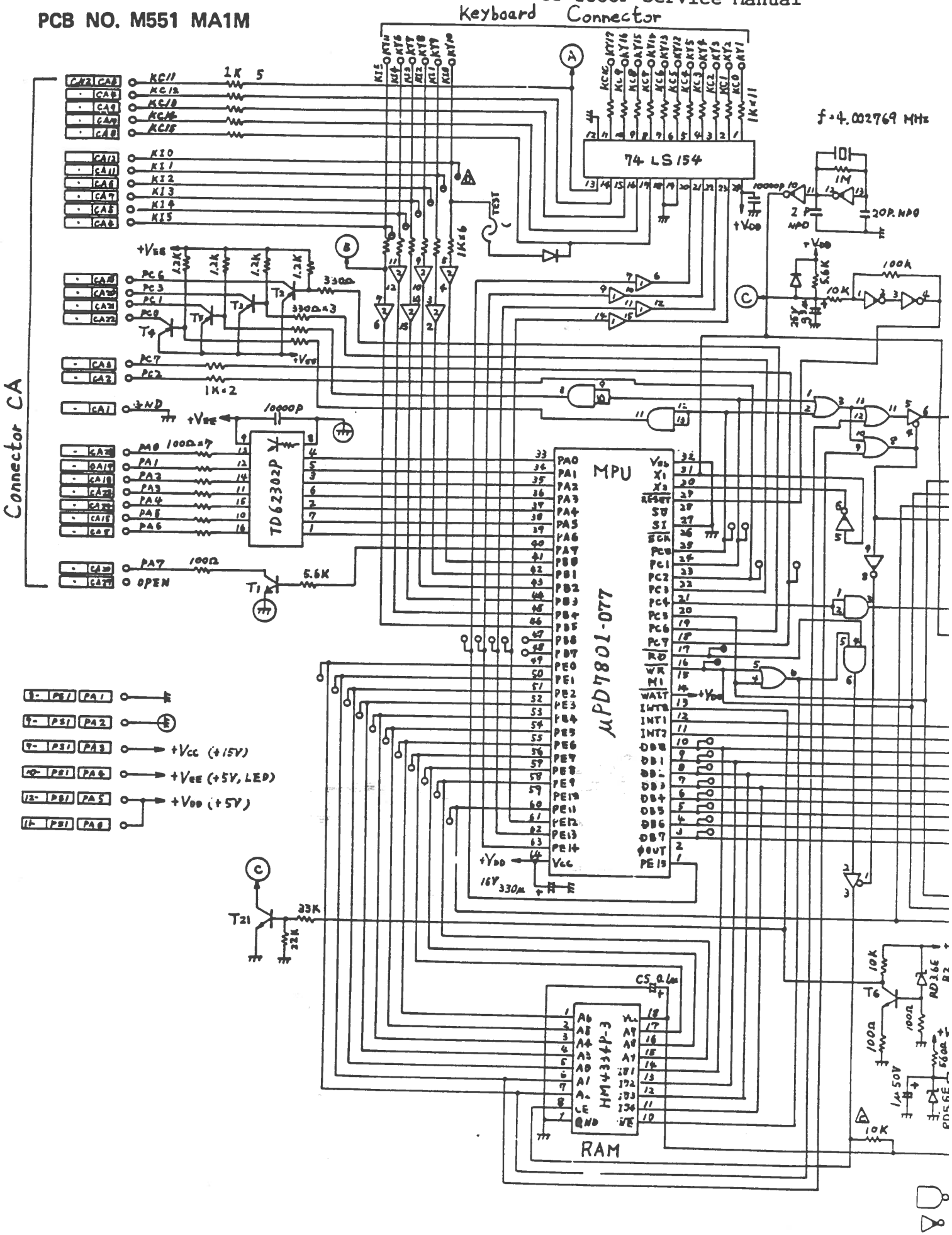

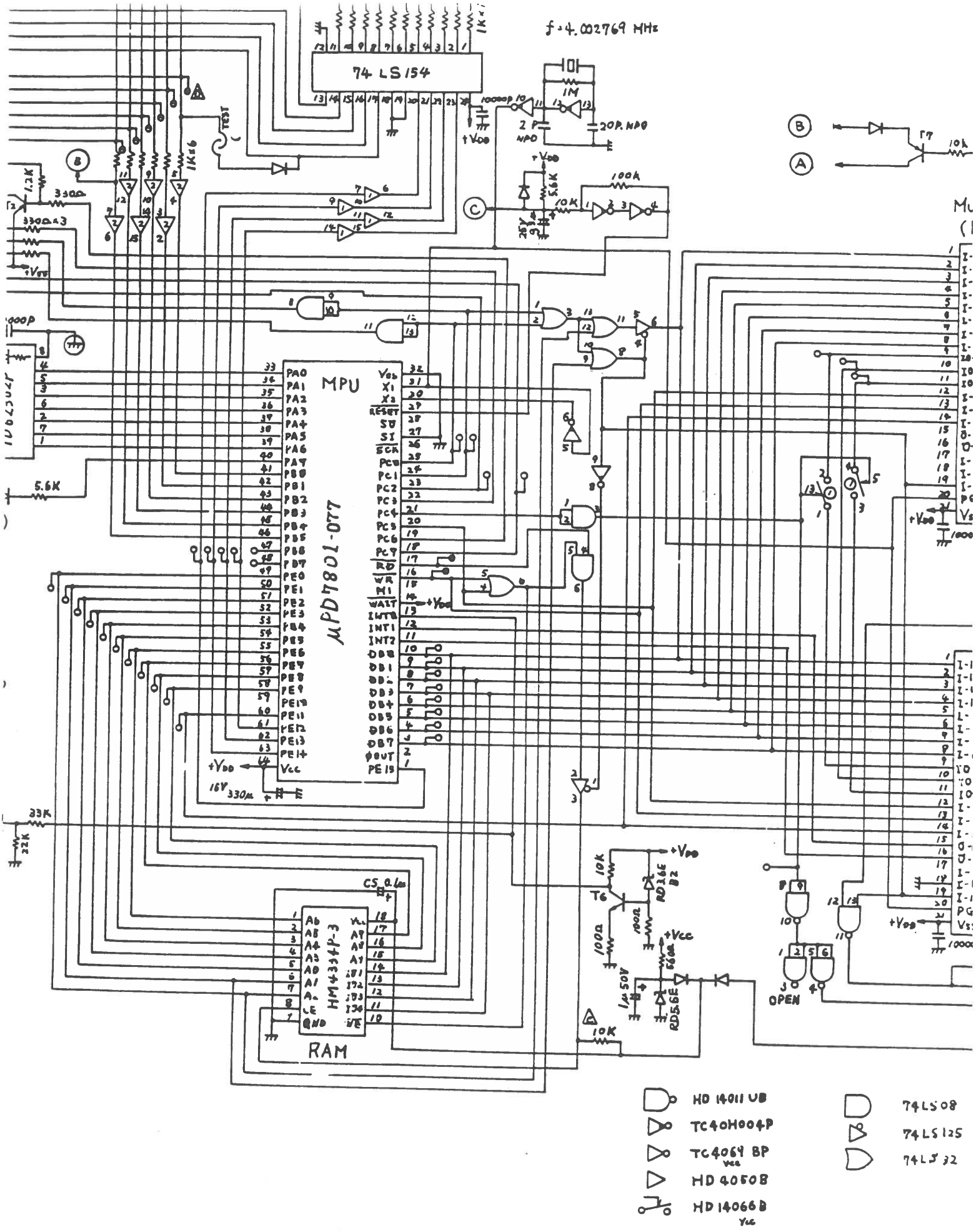
f=4.002769 MHz
74 LS 154
TEST
MPU
μPD7801-077
RAM
HM4334P-3
OPEN
HD 14011 UB
TC40H004P
TC4069 BP
HD 4050B
HD 14066B
74LS08
74LS125
74LS32

CT-1000P Service Manual

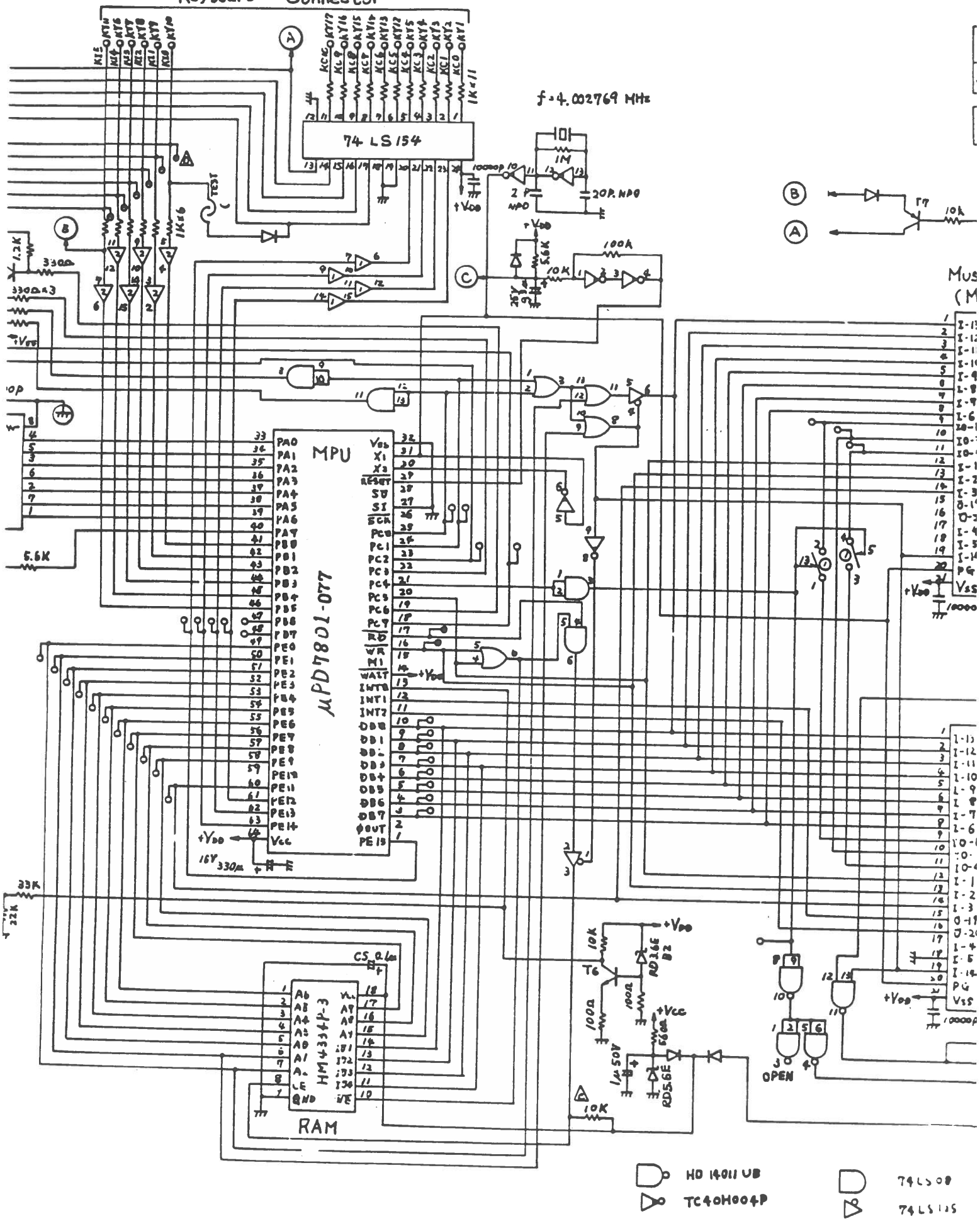

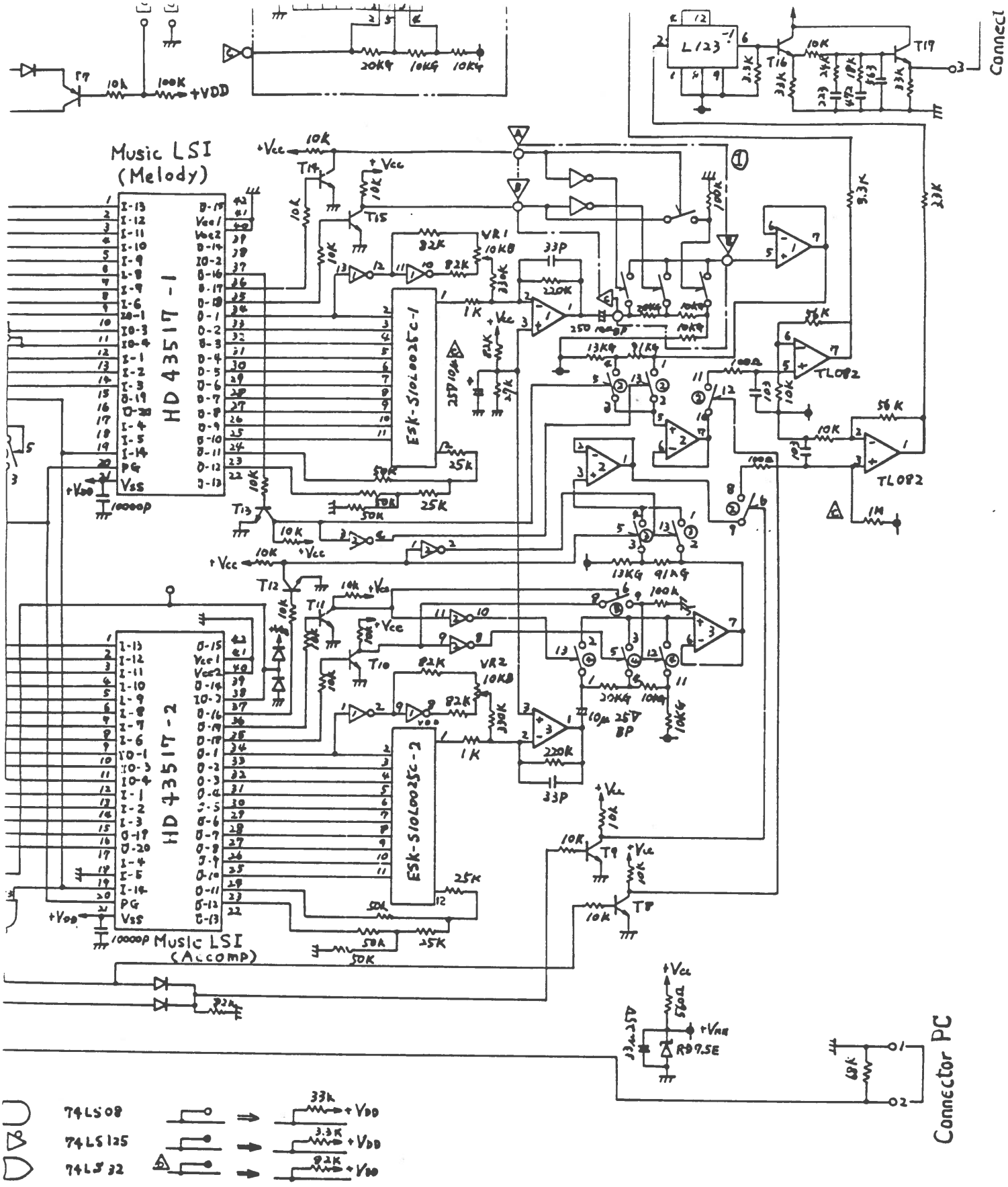
Music LSI
(Melody)
HD 43517-1
HD 43517-2
Music LSI
(Accomp)
ESK-S10L0025C-1
ESK-S10L0025C-2
L123
TL082
TL082
Connector PC
74LS08
74LS125
74LS32
+VDD
+Vcc
10000P
RD7.5E

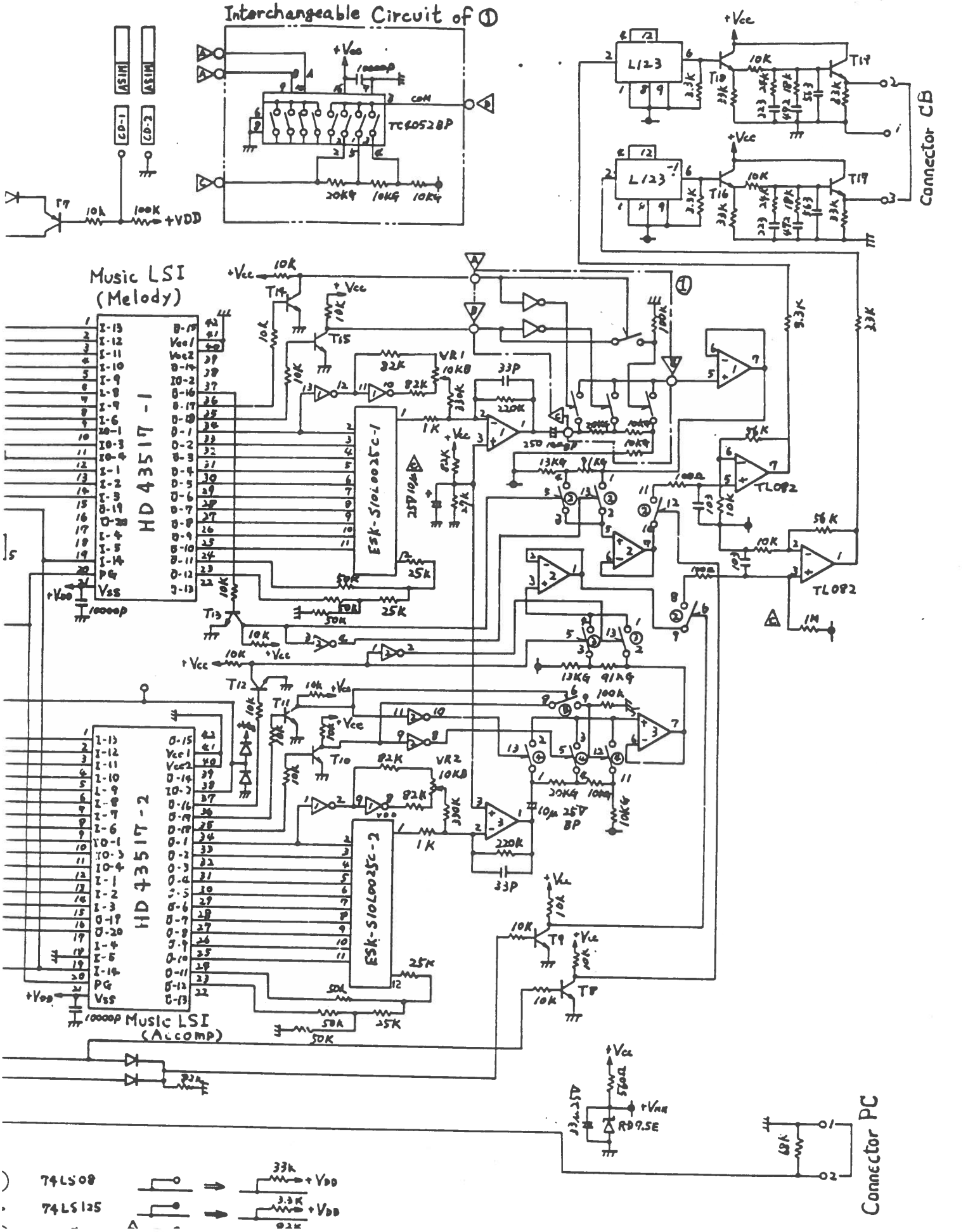

Interchangeable Circuit of ①
TC4052BP
Music LSI (Melody)
HD 43517-1
ESK-S10L0025C-1
HD 43517-2
ESK-S10L0025C-2
Music LSI (Accomp)
Connector CB
Connector PC
L123
TL082
74LS08
74LS125

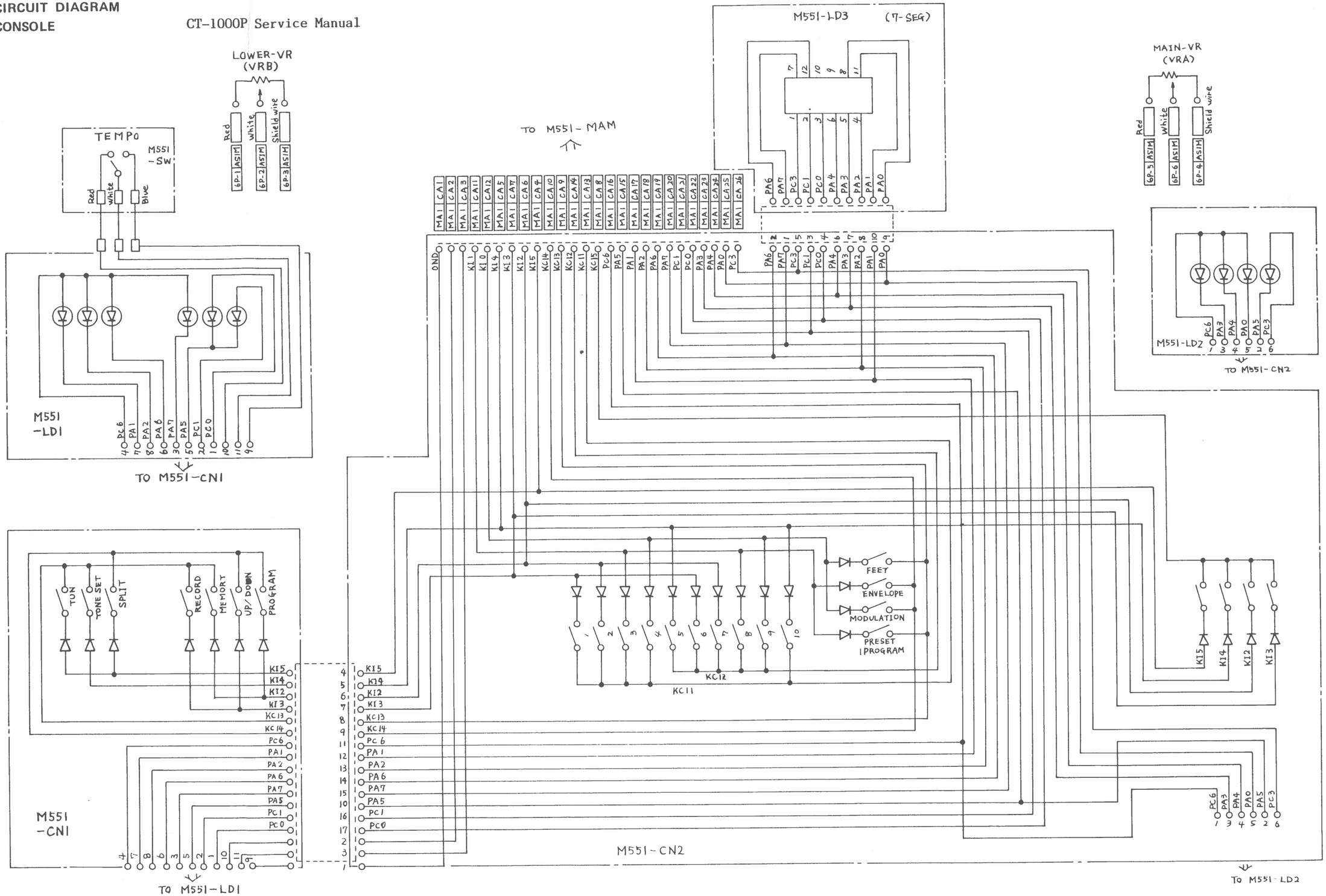
LOWER-VR
(VRB)
Red
white
Shield wire
6P-1 ASIM
6P-2 ASIM
6P-3 ASIM
TEMPO
M551
-SW
Red
white
Blue
M551
-LD1
TO M551-CN1
TO M551- MAM
M551-LD3 (7-SEG)
MAIN-VR
(VRA)
6P-5 ASIM
6P-6 ASIM
6P-4 ASIM
M551-LD2
TO M551-CN2
FEET
ENVELOPE
MODULATION
PRESET
PROGRAM
TUN
TONE SET
SPLIT
RECORD
MEMORY
UP/DOWN
PROGRAM
KC11
KC12
M551
-CN1
M551-CN2
TO M551-LD1
TO M551-LD2

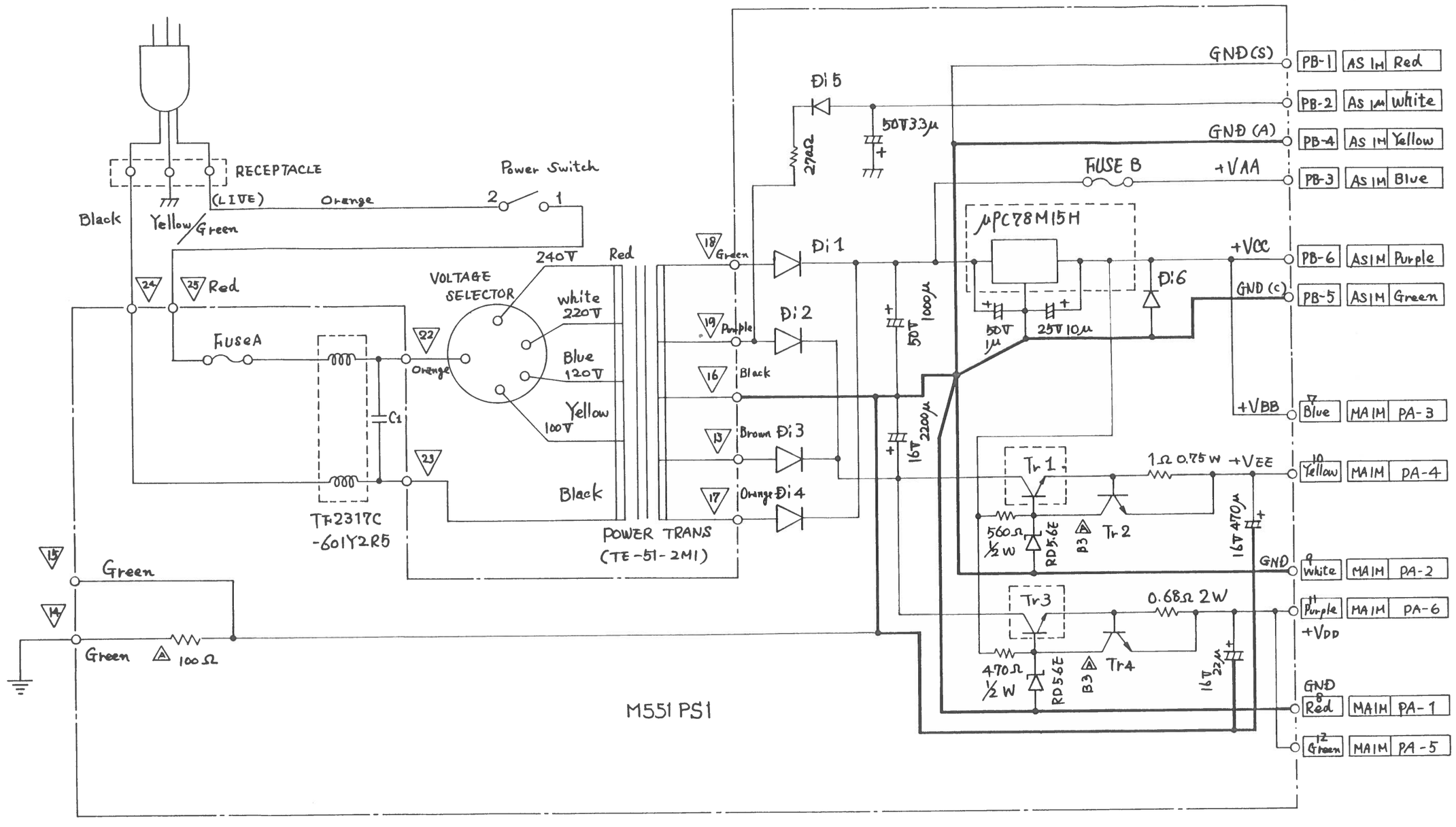

1. Fuse A { Europe .... 0.6A / Other countries 1.5A
2. C1 = { Canada .... LHX-103M125TAC / Other Countries ... PME 265MB 522
3. Tr1, Tr3 .... 2SD612KE
4. Tr2, Tr4 .... 2SC2320E
5. Di1, Di4 .... DS135D
6. Di2, Di3 .... DSA26B
7. Di5, Di6 .... DS442
8. ..... shows Heat Sink.
9. FUSE B 0.5A

IRCUIT DIAGRAM
CB NO. M551 MA1M

CT-1000P Service Manual

Keyboard Connector

Interchangeable Circuit of ①

Music LSI (Melody)

Music LSI (Accomp)

Connector CB

Connector PC

RAM

MPU

μPD7801-077

74 LS 154

f = 4.002769 MHz

TC4052BP

HD 43517-1

HD 43517-2

ESK-S10L0025C-1

ESK-S10L0025C-2

HM4334P-3

TD62302P

TL082

HD 14011 UB

TC40H004P

TC4069 BP

HD 4050B

HD 14066B

74LS08

74LS125

74LS32

CIRCUIT DIAGRAM
M551AS1M

CT-1000P Service Manual

