

C7e

Miktek™



Large Diaphragm
Multi-pattern FET
Condenser Microphone





Owner's Manual

Miktek, LLC
348B Valeria Street• Nashville, TN 37210
tel 615.250.2434 • fax 615.346.9298

©2010 All Rights Reserved, Miktek, LLC. Printed April, 2010 v1_2

www. miktekaudio.com

Table of Contents

Introduction . . . . . 3 - 4
Features 5
Operating the C7e . . . . . 6 - 10
Using the Polar Patterns 6
Connecting your C7e 7
Powering the C7e 7
Setting the Capsule Bias Voltage 8
Setting Up the Signal Level 9
Microphone Placement. 9
The Proximity Effect 10
Stand Mounting the C7e. 10
Installing the SM7 Shockmount 11
Applications Guide . . . . . 12 - 15
Vocal 12
Acoustic Guitar 13
Piano 14
Overhead Drum Kit 15
Stereo Miking Techniques 16-20
Coincidental - XY or Crossed pairs 17
Near Coincidental 19
Spaced Pairs 19
Baffled 20
Specifications 21

You've done, done it….. You've purchased a truly exceptional piece of audio gear! Congratulations and thank you for purchasing the C7e Large Diaphram FET Condenser from Miktek. We know there are a lot of pretty good low cost microphones available today, but you're in an elite group of audio engineers where pretty good is just not good enough. Simply put, that's why we make our products.

In the following sections of this manual you will find a description of the C7e's features, step-by-step set-up and operating instructions along with detailed specifications. In addition, we've also included some basic miking techniques for typical recording and live sound applications. Most of us who've purchased the C7e are already experienced engineers, so these may seem quite basic. However at Miktek, we want to encourage young or new engineers to use our microphones, or at least to read our manuals and learn something about recording and live sound. We know you're serious about your productions because you purchased such an outstanding audio instrument, and at Miktek, we're serious about providing superior products and service to our customers. We appreciate your patronage and hope you enjoy using your microphones as much as we enjoy making them.

Sincerely,

Michael Ketchell - Managing Director

Introduction

The Miktek C7e, multi-pattern, large diaphragm FET condenser will impress the most critical listeners and inspire artists to create their best performance. The microphone's polar characteristic is selectable; offering cardioid, omni and bidirectional pick-up patterns. In addition, the C7e employs a high-pass filter and –10dB pad for recording loud sound sources. The frequency response is warm on the bottom and silky-sweet on the top, yet at the same time, the midrange is natural and open. The microphone produces amazing results when recording acoustic instruments, guitar amps, or as overheads on a drum kit. But of course, the C7e really excels on vocal applications. The C7e utilizes the new MK7 capsule developed by Miktek engineers, featuring dual 1-inch diaphragms made using 5-micron Mylar with a 0.4-micron layer of evaporated gold. Diaphragms are then precisely tensioned, mounted to carefully tuned backplates, and finally set back-to-back with electronic isolation to create the finished capsule. The C7e's electronic circuit design is unique and features the AMI T7 transformer together with the implementation of high quality exotic components including hand-selected transistors. In addition, the innovated head amplifier design features a unique circuit that allows the engineer to switch the capsule bias voltage from +48 to +60 volts. This proprietary circuit implementation essentially provides the mic with two voices; allowing you to choose between a classic and modern microphone. At +48 volts the capsule's diaphragm is under less tension, so it's able to react to extremely subtle changes in sound pressure; enabling the microphone to capture the slightest nuances in any performance. When the bias voltage is set to +60 volts, the C7e is extremely accurate and articulate. The Miktek C7e is hand assembled, tested and packaged in Nashville, Tennessee, USA using components from the US, Europe and Asia. Each microphone includes its serialized frequency response graph created during final testing. The C7e is packaged with its swivel mount, in a wooden box, and set inside a rugged aluminum case along with the included shockmount.

Introduction

With proper care your C7e will operate trouble free for many years. We recommend you record your serial number in the space provided below for future reference.

Serial number:_____

Date of purchase:_____

Be sure to complete the included warranty registration card or visit miktekaudio.com to register on line. In the unlikely instance that your microphone would ever require service, please contact us at 615-250-2434 for a Return Authorization number. If you purchased the microphone outside of the US, please contact your local distributor for service. Please feel free to call us with any questions you may have about this or any other Miktek product.

Features

- MK7 Dual 1-inch Capsule 5-micron Mylar, Evaporated Gold Diaphragms
- Cardioid, Omni and Bi-directional Pick-up Patterns
- High-pass Filter & -10dB Pad Switches
- Variable Capsule Bias Voltage: 48 – 60v
- AMI T7 Transformer
- Individual serialized Frequency Response Graph
- Wood Presentation Case with Swivel-mount, Shock-mount and rugged aluminum Carrying Case

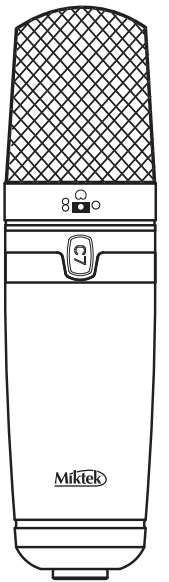

Operating the C7e

Using the Polar Patterns

Perhaps the most important aspect of using your C7e, or any other microphone, is to understand its available polar pick up patterns. Every microphone has a characteristic polar pattern that determines how well it accepts or rejects signal coming from various areas around the microphone capsule. You can use the C7e's polar pattern switch to select one of the three available polar patterns. While there are many types and variations of polar patterns, the C7e provides the three most important; omnidirectional, bi-directional or figure-eight and unidirectional or cardioid. The Omnidirectional pattern produces a linear response regardless of where the sound source originates (in front of the mic, behind it, to the side, etc.). When the C7e is set to the figure-eight pattern the microphone picks up sound directly from the front and back while rejecting the sound at the sides. When set to Cardioid, the C7e will accept the sound coming from directly in front, and reject sound coming from behind or from the sides.

While Omni and Bi-directional microphones are very useful for a variety of applications, many miking situations in recording and live sound applications require uni-directional or cardioid microphones. The cardioid pick-up pattern allows for better separation of instruments in the studio and more control over feedback in live sound reinforcement. When positioned correctly, the cardioid pattern allows you to pick up more of the sound you want and less of the sound you don't want. In live sound situations, the polar pattern also determines how prone a particular microphone is to inducing feedback. Feedback is that nasty howling sound that occurs when a mic is placed too close to a loudspeaker—the signal from the loudspeaker is fed into the mic, then into the loudspeaker, then into the mic, over and over again until an oscillating tone is generated. The cardioid pattern utilized by the C7e is so good at rejecting signal not coming from directly in front of the microphone, you'll find that use of the C7e greatly minimizes feedback problems when used in live sound applications.

Operating the C7e

Connecting your C7e

Connect the C7e to your mixer, mic pre or DAW*(Digital Audio Workstation)* using a standard XLR microphone cable. In order to ensure the proper phase response, please note the C7e's output connecter is wired as Pin 1 Ground, Pin 2 hot or positive, and Pin 3 cold or negative. Also, it always a good idea to turn down your mixer's main output level control when plugging or unplugging microphones so you can avoid any unwanted loud pops that could cause damage to your speaker system.

Powering the C7e

Since the C7e is a condenser microphone it needs to be operated by connecting it to a 48 volt Phantom power source. Most quality mixers, outboard mic pres and DAW mic channels have Phantom power available as a standard feature. You can also use an external phantom supply, if necessary. Since most mixers and outboard mic pres have a dedicated switch to engage the phantom power, be sure to check that the Phantom power is on. Once the Phantom power source is turned on, the C7e receives the phantom power directly from a mic cable.

Using The High Pass Filter

The C7e has an onboard High-pass, or low-cut filter, which when engaged, will reduce the response of the bass frequencies. The knee *(the frequency where the roll off starts)* of the High-pass is set at 100 Hz and the roll off occurs at 12dB per octave. To engage the filter, slide the High Pass switch so the picture of the roll off is showing next to the switch. The High-pass filter can be a valuable tool to help eliminate unwanted low-end content to reduce bleed in the studio and stage rumble in a live situation. Plus, if you're recording an instrument that doesn't make any sound under 100 Hz, don't record under 100 Hz. It's often better to set the High-pass filter on to reduce any unwanted low frequency pick up.

Operating the C7e

Selecting the C7 Capsule Bias Voltage

The C7 has a unique feature allowing the user to choose between two different capsule bias voltages. The bias voltage can be changed from 48 volts to 60 volts. Some listeners may find the change to be quite subtle while others may find it quite dramatic. In general, the 48-volt selection has a more classic sound while the 60-volt selection provides a more modern sound.

Why is this?
At 48 volts the capsule's diaphragm is tensioned to react to extremely subtle changes in sound pressure; enabling the microphone to exhibit a more classic sound that captures the slightest nuances in any performance. When the bias voltage is switched to 60 volts, the C7e is extremely accurate and articulate because the capsule's diaphragm is under slightly more tension providing additional dynamic range and transient response which gives it a bit more of an immediate modern sound.

To change the C7e's bias voltage follow these simple steps.
1/ Remove the end bell by turning it counter clockwise.
2/ Slide off the body tube and locate the bias voltage slide switch on the upper right side of the transformer PC board.
3/ To select 48 volts, hold the microphone upright and slide the switch down to the lower position. To select 60 volts, hold the microphone upright and slide the switch to the upper position.
4/ Slide on the body tube, then, carefully align the end bell and screw it on in a clockwise direction.

IMPORTANT NOTE!: Be careful not to cross thread the end bell. Take your time, look carefully and be sure that the end bell is straight when you screw it back on the body.

Setting Up the Signal Level

In order to get a good signal, first be sure that the C7e is connected to a mixer or recorder input that is microphone level. As explained in the previous section "Powering the C7e", be sure that the Phantom power is turned on. Most quality mixers, mic pres and DAW's provide microphone inputs with a mic trim ("trim" is jargon. the control is usually called Mic Gain or Level) control. The purpose of the mic trim control is to set a good signal level and minimize any noise associated with the mic inputs electronics. A good mic pre will also have a Clip or Peak LED to show you when the input is at overload, the level which distortion begins to occur. To set a good clean level, set the C7e up in front of the desired sound source and slowly turn up the mic trim until you see the Clip LED light up. On most microphone inputs, the best setting is when the trim control is turned up as high as possible without lighting the PEAK LED.

Using the PAD

The C7e has a 10 dB PAD for miking loud signals. If you turn your mic trim all the way down and the signal is still clipping, switch on the C7e's 10 dB PAD, then reset the trim level as described in the previous section.

Microphone Placement

To help maximize the quality of your recording, you must pay careful attention to the placement of your C7e, and specifically, how it is positioned for the instrument or vocalist that you're miking. Remember, the front side of the microphone is the same side as the Miktek logo. As you become more experienced in miking techniques, you'll quickly realize the microphone placement is critical to getting the sound you want. For more information on typical miking, see the Application Notes section of this manual. But remember, these examples are at best an approximation of where you should place the microphone to get the best sound. While placing the mic around any instrument or sound source,

monitor the signal through a set of good quality closed-back headphones and take notice to how just a slight adjustment can make a huge change in frequency response. As you're changing the microphone's position, be sure to check that the mic input is still set to a good level without clipping, as described in the previous section.

The Proximity Effect

All cardioid or uni-directional microphones exhibit a phenomenon known as "proximity effect". The proximity effect is the increase in low frequency response a microphone exhibits as it is moved closer to the sound source. Vocalist's tend to love this effect since when they get really close to the mic they get the "FM radio", big bass sound. A good vocalist with good mic technique will use the proximity effect to adjust their tonal response in real time. The key to developing the best mic technique is experimentation, along with awareness of the general principle that, when the pattern switch is set to Cardioid, the closer your C7e is to a signal source, the greater the bass response. The proximity effect's bass lift is caused by the amount of pressure present at the ports that are used to create the directional pattern. Since omnidirectional microphones do not normally have ports, they do not have proximity effect.

Stand Mounting the C7e

The C7e can be mounted to any standard microphone stand using the included mic stand holder or the SM7 shock-mount. If you are using a US standard 5/8-inch mic stand, remove the Euro adapter by unscrewing it from the mic holder. Screw the holder to a solid mic stand, then line up the bottom threaded section of the C7e to the holder and slowly rotate the microphone clockwise until it screws on hand tight. Be careful not to cross thread the screws. You can loosen the bottom thumbscrew on the holder to make left and right adjustments to the mic, and then re-tighten it once it's in place. Loosen the side thumbscrew to set the microphone angle and then tighten once it's in place.

Installing the SM7 Shockmount

The C7e kit comes with a SM7 shockmount, which you can use to greatly reduce any noise transmitted through the mic stand. The shockmounts are especially useful in reducing the problems caused by a boomy soundstage, for example when miking overhead cymbals, or even in the studio with talent that likes to move a lot on a floor that may not be as solid as it should be.

- To use the C7e with its included shockmount, screw the shockmount on a solid mic stand. If you are using a US standard 5/8-inch mic stand, remove the Euro adapter by unscrewing it from the shockmount.
- Once the shockmount is mounted to the stand, line up the bottom threaded section of the C7e to the holder and slowly rotate the bottom thumbscrew clockwise until it screws on hand tight. Be careful not to cross thread the screws.
- You can loosen the bottom thumbscrew slightly to make left and right adjustments to the mic, and then re-tighten it once it's in place.
- Loosen the thumbscrew to set the microphone angle and then tighten once it's in place.

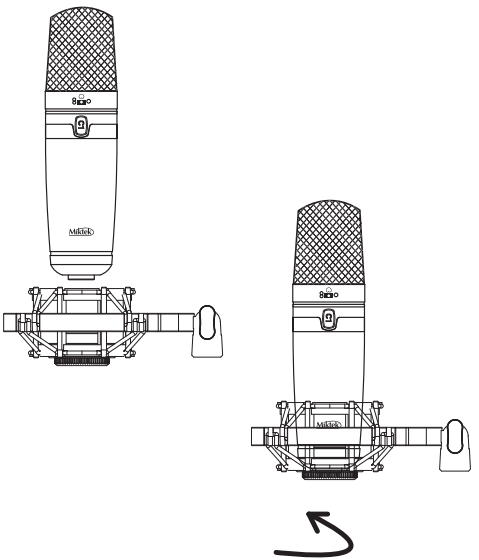

Applications Guide

The C7e is a great microphone choice for many instrument miking situations. Below is a brief guide on using the C7e in some typical applications. But as a general rule of thumb, before you use a typical placement, carefully listen to what you are miking by having the artist play a practice track. Take a walk around the artist as they are playing and listen to what the instrument sounds like from different positions. Move left and right. Listen over the artist's shoulders. Place your head up high and close to the floor. Imagine your ears are the microphones. What do you hear that you like? Then, once you choose your spot, monitor the signal through a set of good quality closed-back headphones and take notice to how just a slight adjustment can make a huge change in frequency response. However, before you get into experimenting, the following basic examples are a good place to start.

Vocals

When using the C7e on vocals, position the microphone in front of the artist so that the microphone grill is approximating 4 to 10 inches away. To avoid unwanted p-popping, use of an external pop filter is strongly recommended. If no pop filter is available try to set the microphone at a slight angle, which will also help reduce p-pops. When the C7e's pattern switch is set to Figure eight, you can record a vocal duet by positioning one vocalist directly in front of the mic and one directly facing the rear of the microphone. Just remember that the extreme sides of the microphone pick up almost nothing due to the bidirectional pick up pattern. You can record a group of vocalists by positioning them in a circle around the C7e with the pattern switch set to Omni. The linear response will pickup up all the vocalists in a 360 degree pattern, evenly. Try to set the balance by having the talent use natural dynamics to blend, or position each singer at different distances to the mic to create a different balance.

Acoustic Guitar

There are a variety of ways that the C7e can be used to mic an acoustic guitar. The correct placement will depend on the type of instrument and what kind of sound you're looking to capture, for example the tonal quality you want to focus on, and how much finger slide or pick noise you may or may not want. When miking a standard steel string acoustic, a good place to start is with the microphone positioned pointing towards the end of the fingerboard at a distance of about 6 inches to 2 feet away from the instrument. You can experiment by moving the microphone slightly in the direction of the sound hole, which will produce more low frequencies, or move it in the direction of the 12th fret to capture more high-end or to remove any unwanted boominess. For nylon string acoustic, try positioning the microphone above the bridge to emphasize more of the attack from the sound of the finger picking, or for less, move the mic closer to the sound hole. If you have a pair of C7e's, try one positioned at the fingerboard and the second over the sound hole. Try positioning one mic in the front of the guitar pointed towards the fingerboard and another over the right shoulder (right handed player).

Important Note: *When using multiple microphones you need to be aware of their phase response. In general, all the microphones need to be facing in the same direction or you will experience comb filtering and/or phase cancelation. For instance, in the previous example set up it will be necessary to invert the phase on the over the shoulder microphone since it will be more than likely end up facing the opposite direction as the front microphone. Any good mic pre will have a Phase reversal switch so be sure to reverse the phase of any mics facing the opposite direction.*

Applications Guide

Piano

You can achieve outstanding results using the C7e on acoustic piano. Several placement approaches can be used depending on the size of the piano, and the type of sound you are looking to record. When miking a Grand Piano, (for an ambient sound like that used in a classical recital), a single C7e can be positioned directly in front of the instrument. Open the lid to the full position and place the microphone five to twelve feet in front of the instrument. For a more contemporary sound with better isolation, place two C7e's inside the piano positioning one over the low strings and the other over the high strings. To achieve a more realistic sound, it's a good idea to leave some space between the instrument and the microphone, especially if you are recording a solo instrument. Also, keep in mind how the track ultimately needs to fit into the mix. For example, if you are recording a solo performance of Chopin, you would likely want a very even response and you'd want to capture the left hand sostenuto. However, if you are recording rock and roll or pop music, you may want the piano to sit within the track in a specific frequency range where less bass is desired. Nashville engineers, and other good ones from all over the planet, are famous for building the mix as they track, starting with the microphone placement. You can also try the XY or ORTF stereo mic set-ups described in the following section, *"Stereo Miking Techniques"*.

Strings

Place the C7e one to three feet from the instrument when recording a solo string instrument like a violin. When recording a string section, try to position one or more C7e's several feet from the players. If the size of the room permits, raise the microphones three or four feet above the section and position them at a 45-degree angle, facing down. If you have two C7e's, you can try the XY or ORTF stereo mic set-ups described in the following section, *"Stereo Miking Techniques"*.

Overhead Drum Kit

Because of its extended high frequency response and fast transient response, the C7e performs outstandingly when used as an overhead cymbal microphone. The C7e's big sound and linear response capture the entire kit making them awesome on overheads. You can position one C7e on a boom mic stand directly above the kit pointing from front to back. For stereo miking, use two C7e's placed over the drum set at a distance of two to three feet depending on the size of the kit. You can experiment with the exact placement depending on the size of the room and whether you're looking for an ambient or close-miked sound. You can also try the XY or ORTF stereo mic set-ups described in the following section, *"Stereo Miking Techniques"*. In general, when miking a drum kit, it's a good idea to start with the overhead mics. Even though you use the overhead mics mostly for the cymbals, try to get the entire kit to sound great in the overheads. Then it will be easier to just bring up your individual mics for more attack and thickness in the overall sound.

Stereo Miking Techniques

Stereo Miking Techniques

Recording instruments like acoustic guitar, piano and drums, or ensembles (especially in classical or jazz), in stereo will provide a much more realistic experience for the listener. You can create a stereo recording by simply using your mixer's or DAW's pan controls to place different instruments in between the left and right speakers. However, since the recorded tracks were likely created with close miking, the stereo mix is void of a lot of information that the listener would normally enjoy in a live performance. When you record live tracks in stereo, not only will you capture the left and right position, but you can capture the perspective of depth and distance of each instrument. You'll also capture an image that translates the distance between the ensemble and the listener, and, you capture the sound of the acoustic space surrounding the instrument or ensemble. When recording ensembles in stereo you have better chance of faithfully reproducing the balance between the instruments that was originally intended by the composer. For most stereo miking applications, you need to have two microphones with closely matching frequency responses and polar patterns. Depending on which miking technique you use, the stereo image is created when the combination of microphones pickup differences in level, time and frequency response.

There are several time-tested techniques for recording in stereo including coincidental or XY pairs, near coincidental or AB, spaced pairs, and baffled. Following is a brief explanation of these common types of stereo miking set ups.

Coincidental - XY or Crossed pairs

Coincidental microphone set ups are where the two microphones' capsules are set close together on the same axis. The most common of these is XY or crossed pairs. In the XY set up, the two microphone capsules are positioned on the same axis, one directly above the other with the capsules positioned on an angle from 90 to 120 degrees. The wider the angle, the wider the stereo spread. Since the microphones are set on the same axis, the distance is constant and there's little or no delay difference. Therefore, the stereo image is created by the level difference of the left and right microphones. Since there is no appreciable delay, there is less of a chance for phase cancelation and comb filtering so you can obtain good results when the stereo signal is combined to a mono signal.

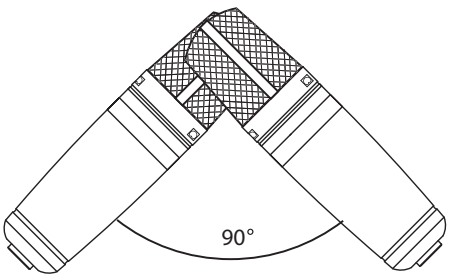

MS – Mid side

The Mid side technique makes use of two microphones, with one figure-8 and a second mic either cardidod or omni , or two figure-8 pick patterns. The first microphone (the mid), either figure-8, omni or cardioid microphone, is positioned facing directly at the sound source. The second microphone (the side), with a figure-8 pattern, is positioned on the same axis directly

above or below the first, but with the capsules positioned at a 90-degree angle from the front. The outputs of the two microphones are often connected to a special MS matrix mixer, which combines the mid signal with the signal of the side microphone, both in phase and out of phase. The matrix mixer's ratio control now used to set the balance between the mid mic and the combined signal of the side mics to adjust the width of the stereo spread. You can also connect the two microphones outputs to two inputs of a stereo mixer, let's say channel one and two. Next, split the side signal into a third channel set to reverse phase. Pan channels two and three hard left and hard right respectively. Channels two and three should be at equal level and always adjusted the same amount as if they were grouped together. Now use the balance between channel one and the grouped channels two and three to adjust the width of the stereo spread.

If you want to create the Mid-side stereo effect after you've recorded into your DAW, record the mid mic on track one, and the side mic on track two. Then, copy track two to track three, be sure they are aligned perfectly and then reverse the phase on track three. Now group tracks two and three together so they move with one fader. Then pan channel two hard left and channel three hard right. At this point you can adjust the width of the stereo image by changing the balance between track one and the group channels two and three.

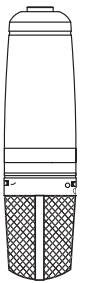

Figure-8

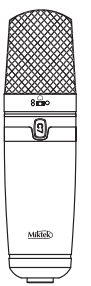

Cardioid

Near Coincidental

Near coincidental or AB mic set up uses two matched microphones set relatively close together, facing in opposite directions. The spacing between the microphones creates a time delay adding to the stereo effect. The greater the angle the greater the stereo spread. Less of an angle yields a more narrow spread. There are a few standards that specify different angles and spacing, with the most popular being the ORTF (the acronym given to the French Broadcasting Organization which stands for Office de Radiodiffusion Television Française). The ORTF standard specifies the capsules to be spaced 17cm apart and set at a 110-degree opposing angle. In this setup the stereo image is created by the differences between level and time. The stereo image is sharp however it tends not to be mono compatible.

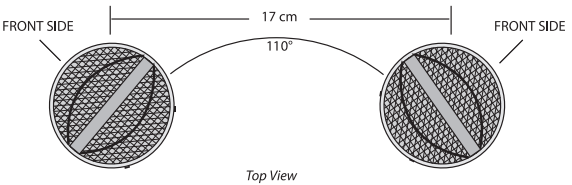

Spaced Pairs

The spaced pair approach uses two identical microphones set rather far apart, for example 2 to 20 feet, or more apart, both facing directly at the sound source. The further apart that the microphones are placed, the wider the stereo spread.

Applications Guide

The instruments in the center of the two microphones will be heard midway between the left and right speaker. With greater distance, the off center images are less focused or more diffused. This set-up tends to capture more ambience from the acoustical space, which can be very pleasant to the listener, however the signal tends not to be mono compatible. In some instances where the microphones are very far apart, a third microphone can be used in the center to reinforce the clarity of the center image.

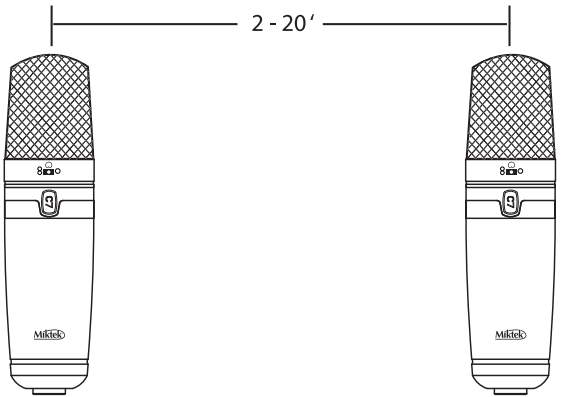

Baffled

In a baffled stereo set up, two omni directional microphones are placed roughly the distance between your left and right ears with a physical hard or foam baffle placed in-between the two mics. It uses time differences at low frequencies and level differences at high frequencies to create the stereo image. The baffle creates a difference in frequency response between the two microphones, with less high frequency content heard from the further microphone. Therefore with the baffled set-up, the stereo signal is achieved by the combination of the differences in level, time and frequency. With the baffled set-up the stereo image has a tendency to be exaggerated and not mono compatible.

Specifications

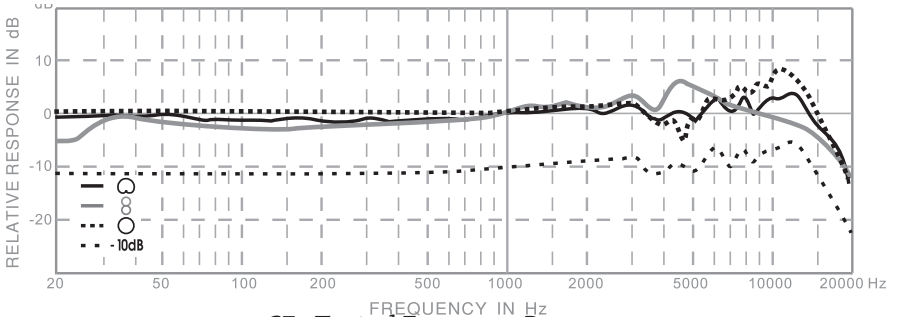

C7e Typical Frequency Response

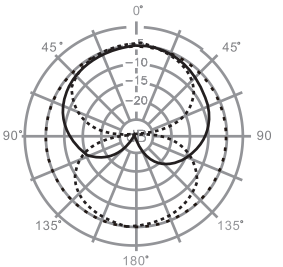

C7e Polar Response

- **Type..... Large Diaphragm Multi-Pattern FET Condenser**
- **Polar Pattern..... Cardioid, Figure-8 and Omni**
- **Frequency Response ..... 20~20000Hz**
- **Sensitivity ..... -29, - 34, -38 dBV/Pa**
- **Equivalent Noise Level..... 13, 18, 22 dB**
- **Dynamic range 105dB**
- **S/N Ratio..... 81, 76, 72dB**
- **Max. SPL..... 127 dB**
- **Power Supply..... 48V phantom**

Specifications are subject to change without notice.

www. miktekaudio.com

348B Valeria Street• Nashville, TN 37210
tel 615.250.2434 • fax 615.346.9298

©2009 All Rights Reserved, Miktek. Printed April, 2010 v1_2