Acoustimass® Professional Powered Speaker System Owner's Guide



Warning

To reduce the risk of fire or electric shock, do not expose this system to rain or moisture.

Caution

To reduce the risk of electric shock, do not remove the cover of this system. No user-serviceable parts inside. Refer servicing to qualified service personnel.

The CAUTION marks shown on this page are located on the back of your system.



The lightning flash, with arrowhead symbol, within an equilateral triangle, is intended to alert the user to the presence of uninsulated "dangerous voltage" within the system enclosure that may be of sufficient magnitude to constitute a risk of electric shock.



The exclamation point within an equilateral triangle as marked on the system is intended to alert the user to the presence of important operating and maintenance instructions in this owner's guide.



CAUTION

RISK OF ELECTRICAL SHOCK – DO NOT OPEN

TO PREVENT ELECTRICAL SHOCK, DO NOT REMOVE COVER.NO USER-SERVICEABLE PARTS INSIDE.REFER SERVICING TO QUALIFIED PERSONNEL.

TO PREVENT FIRE OR SHOCK HAZARD,DO NOT EXPOSE THIS UNIT TO RAIN OR MOISTURE.

AVIS

RISQUE DE CHOC ELECTRIQUE – NE PAS OUVRIR

AFIN DE PRÉVENIR UN CHOC ÉLECTRIQUE NE PAS ENLEVER LE COUVERCLE ARRIÈRE. IL NE SE TROUVE À L'INTÉRIEUR AUCUNE PIÈCE POUVANT ÊTRE RÉPARÉE PAR L'USAGER. S'ADRESSER À UN RÉPARATEUR COMPÉTENT.

Before you begin . . .

Thank you for purchasing the Bose® Acoustimass® Professional powered speaker system. We are confident that its advanced technology and quality construction will provide you with many years of reliable service.

NOTE: This equipment generates, uses, and can radiate radio frequency energy, and if not installed and used in accordance with this instruction manual, may cause interference to radio communications. It has been tested and found to comply with the limits for a Class A computing device, pursuant to Subpart J of Part 15 of FCC Rules, which are designed to provide reasonable protection against such interference when operated in a commercial environment. Operation of this equipment in a residential area is likely to cause interference, in which case the user, at his own expense, will be required to take whatever measures may be required to correct the interference.

WARNING: The Acoustimass® Professional system is an electrical appliance. There are no user-serviceable parts inside. As with all electrical appliances, danger from electrical shock may result from attempted repair by unqualified personnel. Service should always be performed by Bose-authorized personnel.

Safety Information

Please read this safety information before connecting or operating the Acoustimass Professional system.

1. Retain all safety and operating instructions for future reference.
2. For your safety, follow all cautions and warnings in the operating instructions and on the unit.
3. As with any electrical appliance, do not use the unit in excessively damp areas. For example, do not use this product near a beverage service area, swimming pool, or in a wet basement.
4. Do not use the unit near excessive heat sources such as radiators, heat registers, flood lamps, spotlights, stoves, or other appliances.
5. Always route cables running to the unit where they will not be walked on, pinched, or cut by heavy or sharp objects.
6. Do not operate the Acoustimass system without its front grille as this presents a shock hazard.
7. Do not put objects and wires through the front grille or into the ports. Do not touch woofer or other drivers. Electric shock may result.
8. Do not remove the Two-State Modulation amplifier; electric shock may result. There are no user serviceable parts or fuses in the amplifier.
9. **CAUTION:** There is no power transformer in the Two-State Modulation amplifier. Thus the power amplifier, the woofer and six mid/high-frequency drivers (speakers) are connected to the AC line (mains); a lethal shock may result if these drivers are touched. User safety protection is provided by the buffer/equalizer input amplifier which has its own small power transformer and audio output transformer. **In all cases the Acoustimass system should be serviced by an authorized Bose service center.** The Bose service centers will ensure that the product is safely repaired with factory-authorized parts.
10. Do not remove the ground prong from the plug on the AC line (mains) cord.
11. Do not fly or hang the Acoustimass Professional speaker system by its handles, as rupture of the handles may result in permanent damage to the enclosure and physical injury to anyone near the system. For hanging or wall mounting, see sections pertaining to special Bose accessory kits.

I. Product Description

The Acoustimass Professional powered speaker system is a high-performance, self-powered, self-equalized system. It consists of a built-in Two-State Modulation amplifier, six Bose 4½-inch mid/high-frequency HVC drivers (speakers), a 12-inch high-displacement Bose woofer and a custom-molded impact-resistant enclosure. All of the components were designed as a system to provide pure and powerful full-range sound for a wide variety of portable and installed applications.

Figure 1 illustrates the Acoustimass Professional system and its primary parts. The woofer is mounted between two separately-tuned resonant enclosures, which are the product of Bose proprietary Acoustimass speaker technology. The six mid/high-frequency drivers are mounted on an aluminum die-cast Articulated Array® baffle for superior sound dispersion. A powerful, yet extremely lightweight and efficient, Two-State Modulation amplifier powers all of the drivers.

Built-in features and accessory kits allow the Acoustimass® Professional system to be stand mounted (using the Bose SS-10 speaker stand), wall mounted, or flown. In addition, up to four Acoustimass Professional systems may be interlocked together for hanging or flying in arrays.

Figure 1

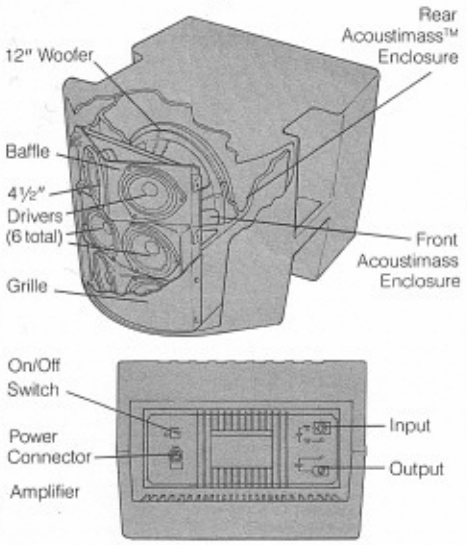

Figure 1. The primary parts of an Acoustimass system.

II. Unpacking the Acoustimass Professional Powered Speaker System

The Acoustimass Professional system is packed one unit per carton. Unpack the unit carefully, saving the carton and all packaging material for possible use later. The styrofoam fillers may be used as spacers for transporting stacked units with eyebolts (from the Bose accessory Hanging Kit HK-1) attached.

IMPORTANT: If the unit appears to be damaged when unpacking, do not operate it. Repack the unit in its original carton and notify your authorized Bose Professional Products dealer immediately.

III. Operation of the Acoustimass Professional System

Connecting the System

Figure 2 shows a signal flow diagram for a typical sound system using the Acoustimass Professional system. The audio input to the unit is line-level balanced (XLR connector) or unbalanced (¼-inch phone plug). Typically, the system's input is connected to a mixer's output; however, the Acoustimass Professional system's input may also be connected to any audio source providing line-level outputs. Note that any line-level audio source chosen must have an output level control, as there is no input level control on the Acoustimass Professional system. Multiple systems may be connected in parallel by "daisy-chaining" the output of one enclosure to the input of the subsequent one.

Figure 2

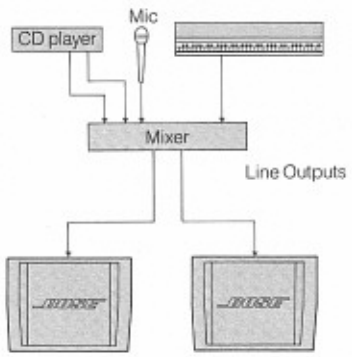

Figure 2. A sample signal flow diagram for a sound system which features the Acoustimass system.

Turning the System On

To turn the system on, simply depress the power button on the rear of the enclosure (mounted on the amplifier).

IV. Wiring Requirements

The rear panel of the system contains two inputs: XLR balanced and ¼-inch phone unbalanced. In all cases, the wire providing the signal to the unit should be shielded and stranded audio-grade wire. The use of unshielded wire may result in hum and noise pickup.

AC power connection should be made using a grounded UL/CSA-listed power cord (such as the one provided). Note the strain-relief attachment on the enclosure. Use this after connecting the power cord to prevent the cord from becoming disconnected. The Acoustimass Professional system draws a maximum of 6.5 amperes. An electrician should be consulted if you are uncertain about appropriate power cord requirements.

V. Stand Mounting the Acoustimass Professional System

WARNING: A Bose model SS-10 speaker stand should always be used when stand mounting the Acoustimass Professional system. Each stand is designed to mount one speaker system only. Do not use the Bose SS-5 speaker stand or substitute other stands as this may result in personal injury or product damage.

The SS-10 stand mounts directly to the bottom of the Acoustimass Professional system as shown in **Figure 3.** Refer to the Owner's Guide packed with the SS-10 stand for detailed mounting instructions.

Figure 3

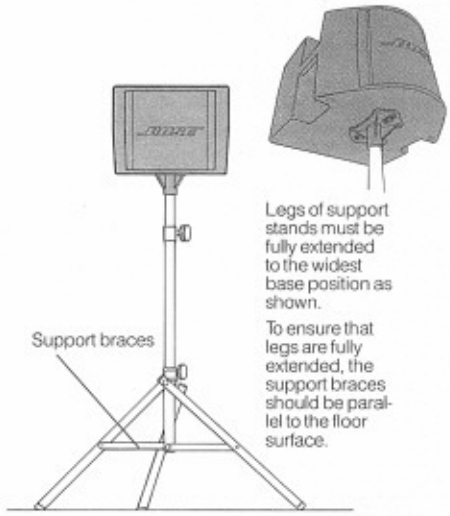

Figure 3. Mounting an Acoustimass system to the SS-10 stand. Never raise the inner tube past the colored band, and make sure that the cross braces are fully horizontal.

VI. Interlocking Multiple Acoustimass® Professional Systems

The Bose Stacking Kits SK-2, SK-3, and SK-4 are required for interlocking multiple Acoustimass Professional systems together, as shown in **Figure 4.** The SK-2, SK-3, and SK-4 consist of ¼-20 UNC rolled rods cut to specific lengths to accommodate stacking two, three or four systems together respectively. Hardware from the Bose Hanging Kit HK-1 (see Section VII) is also required. Make sure you read the detailed instructions in the Owner's Guide packed with each stacking kit before attempting installation.

Bose stacking kits are designed to meet or exceed safety margins required for load handling capacity by safety agencies of North America, Europe, and Australia (UL, CSA, IEC, MITI, VDE, and SAA).

Figure 4

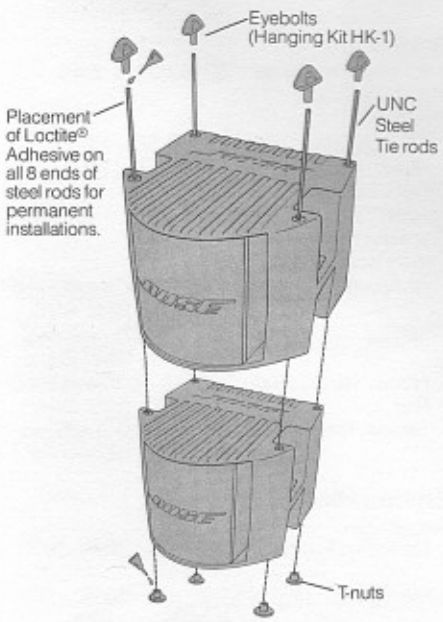

Figure 4. Interlocking multiple Acoustimass systems.

VII. Hanging or Flying the Acoustimass Professional System

CAUTION: The Acoustimass system should only be installed by an experienced professional sound contractor. The contractor should thoroughly review both this guide and the detailed instructions provided with any Bose accessory kit selected. Other hardware used to support a single Acoustimass Professional system or multiple Acoustimass Professional system arrays should be capable of supporting at least seven times the weight of the system or arrays to be supported.

The Bose Hanging Kit HK-1 consists of four specially designed high-strength 4140 steel alloy eyebolts plated and painted to provide excellent moisture and salt fog resistance. Installation of the eyebolts requires the removal of the high-strength alloy T-nuts supplied with the speaker enclosure. A single Hanging Kit HK-1 is required to hang from one to four Acoustimass Professional enclosures, which are stacked using the appropriate Stacking Kit (SK-2, SK-3, or SK-4). Refer to the Owner's Guide packed with the Hanging Kit HK-1 for detailed instructions.

WARNING: Under no circumstances should the Acoustimass Professional system be hung from its handles.

VIII. Wall Mounting the Acoustimass Professional System

The Bose Wall Mount Kit WMK-1 is designed to maximize acoustic performance of the Acoustimass Professional system while meeting all worldwide safety specifications. The wall mounting allows aiming of a single system at virtually any angle. **Figure 5** shows the proper way to wall mount the system. Refer to the Owner's Guide packed with the Wall Mount Kit WMK-1 for detailed mounting instructions.

Figure 5

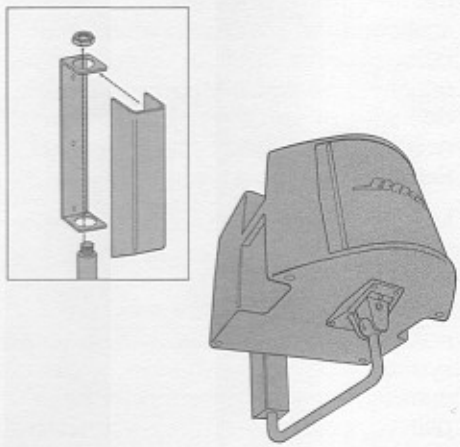

Figure 5. Proper wall mounting of an Acoustimass system.

IX. Maintenance, Repair and Service

The Acoustimass Professional system may be serviced only by qualified personnel. The system carries a transferable warranty of 5 years on the enclosure and transducers, and 3 years on the Two-State Modulation amplifier. The warranty on this product is void if the system has been opened, serviced or modified by non-Bose service personnel.

WARNING: Do not attempt to repair the unit. Also, do not attempt to remove or replace the 12-inch woofer or any of the 4½-inch drivers. There are no user-serviceable parts inside, and the danger of electrical shock exists both inside the system and at the speaker terminals. High line (mains) voltage can exist at driver terminals, as well as elsewhere within the system.

The Acoustimass Professional system is made from an impact-resistant structural urethane foam, which, if properly cared for, will give years of service. To minimize scuffing or scratches, the use of a Bose Acoustimass Professional

system Travel Bag ATB-1 is recommended. If the system does get scratched, the use of a vinyl care product such as ArmorAll™ will restore the original appearance of the product. If damage to the enclosure occurs (such as an air leak), contact your authorized Bose® service center.

Most paint systems do not adhere well to the Acoustimass® enclosure. Special Polane primer D61A23 and Polane paint systems from Sherwin-Williams® are needed. In all cases, unplug the speaker system before painting. Under no circumstances should the amplifier be painted, as damage to the plastic finish may occur.

WARNING: The stainless steel grille must be removed before painting, to prevent painting of the mid/high-frequency speaker cones. Also, mask the woofer and six mid/high drivers before the remainder of the cabinet is painted. Accidental painting of the drivers will affect acoustic performance and create a potential fire hazard.

X. Troubleshooting

If you experience trouble with a Bose Acoustimass Professional powered speaker system, please check the following before contacting your authorized Bose service center.

Problem	Solution
Buzzing or hum	Be sure that all other components of the system are grounded. If problem persists, try using a balanced line input.
Microphone feedback	Reposition the loudspeaker or microphone by approximately 1-4 feet. Locating the microphone behind the front surface of the powered speaker system generally provides the best results.
No sound	Check power and signal cables to the system. Check power switch on system. Also check cabling and switches on source equipment (mixers, etc.)
Distorted bass	Check the enclosure for cracks and leaks. Small cracks and leaks can be found by listening for "whooshing" or hissing sounds from the cabinet during usage. If cracks and leaks are found, contact your authorized Bose service center.
Radio station interference	Use a shielded signal line for input. Also, try physically rerouting the line.

XI. Accessories

Wall Mount Kit
WMK-1 — for wall mounting a system

Hanging Kit
HK-1 — for hanging a system

Stacking Kit
SK-2 — for interlocking two systems
SK-3 — for interlocking three systems
SK-4 — for interlocking four systems

Travel Bag
ATB-1 — heavy-duty protective cover

Speaker Stand
SS-10 — for stand mounting the system

XII. Specifications

General

Weight	75 lbs (34 kg)
Overall Dimensions	16″H × 22¼″W × 23¼″D (40.6 × 56.5 × 59.1 cm)
Power Amplifier	450-watt, Two-State Modulation amplifier
Electrical input sensitivity	1 V to achieve maximum SPL, line-level input
Driver Complement:	Six 4½″ helical voice coil drivers One 12″ magnetically-braked woofer

Electrical

Inputs	Line-level balanced (XLR connector) and unbalanced (¼″ phone plug).
Input Impedance	10kΩ unbalanced, 2.4kΩ balanced
Pin Assignment	1-ground, 2-signal high, 3-signal low
Maximum Amperage	6.5 amp
Power Input Requirements	120V, North America 230V, Europe and Australia 100V, Japan only
Power Output	450W
Common Mode Noise-Rejection Ratio (quieting)	40 dB, referenced to the input

Acoustics

Frequency Response	50-18,000 (± 3dB)
Maximum Output (free field)	
Speech Only	122 dB-SPL, 1m
Music	120 dB-SPL, 1m
Driver Crossover Frequency	200Hz
Dispersion Angles (–6dB down points)	
Horizontal	100° at –6dB averaged by octave, 1kHz–8kHz
Vertical	60° at –6dB averaged by octave, 1kHz–8kHz
Horizontal, Stacked Pair	100° at –6dB averaged by octave, 1kHz–8kHz
Vertical, Stacked Pair	30° at –6dB averaged by octave, 1kHz–8kHz

Environmental

Temperature	
Operating Range	–20°F to 122°F (–29°C to 50°C)
Storage Range	–40°F to 180°F (–40°C to 82°C)
Humidity	20-95% relative humidity (note: do not operate this speaker system in the rain, or when wet.)

Mechanical Structure

Cabinet Material	Structural polyurethane foam
Tie Rods (4)	¼"-20 UNC
Baffle Material	Die-cast aluminum
Grille Material	Stainless steel
Threaded Inserts	8 mm-18 UNC
T-Nuts	¼"-20 UNC

Engineer's and Architect's Specifications

Acoustimass® Professional Powered Speaker System

The system shall be a self-amplified, multiple-driver system with active equalization, as follows:

The transducer complement shall consist of (6) high-sensitivity mid/high-frequency drivers of 11.4 cm (4½-inch) diameter, mounted vertically on a baffle assembly, and (1) 30.5 cm (12-inch) bass driver captured in an Acoustimass system enclosure.

The audio inputs to the unit shall include both line-level balanced (XLR connector) and unbalanced (¼-inch phone plug) connectors.

The system shall also include a 450-watt amplifier. Weight for the amplifier is 4.42 kg (10 lbs). Dimensions for the amplifier shall be 45.7 cm × 17.8 cm × 8.6 cm (18" × 7" × 3.4").

The enclosure for the system shall measure 40.6 cm × 56.5 cm × 59.1 cm (16" × 22.2" x 23.3"). The enclosure shall be constructed of structural polyurethane foam, and shall include (4) ¼"-20 UNC tie rods.

The maximum output for the system shall be 122 dB-SPL for voice only, 120 dB-SPL for music, using 1 volt input, measured at one (1) meter in the free field.

The system shall comply with the following safety agencies:

Australia	SAA
Canada	Canadian Standards Association CSA C22.2 No. 1-M1981
Europe	IEC-65, SEV, SEMKO, DEMCO
Japan	MITI
USA	Underwriters Laboratories UL813, 746A
West Germany	VDE-0860

The system shall comply with the following radio frequency emission requirements:

USA	FCC Part 15J Class A
West Germany	VDE-0871 Class A

The system shall be the Bose® Acoustimass Professional powered speaker system.

XIII. Warranty Information

Bose warrants the enclosure and transducers to be free from defects in materials and workmanship for a period of five (5) years from the date of purchase of a Bose® Acoustimass Professional powered speaker system. Bose warrants the Two-State Modulation amplifier to be free from defects in materials and workmanship for a period of three (3) years from the date of purchase. During these periods, Bose will remedy all such defects, without charge for parts or labor, upon return of the unit, together with the original sales receipt or other proof of purchase, to Bose or to an authorized Bose service agency. This warranty does not extend to damage resulting from improper installation, misuse, neglect or abuse, or to exterior appearance. In no event shall Bose be liable for incidental or consequential damages.

Some states do not allow the exclusion of incidental or consequential damages, so the previous exclusion may not apply to you.

BOSE
Better sound through research.

Bose Corporation, The Mountain, Framingham, MA 01701 (617) 879-7330 (after July 16, 1988 (508)-879-7330)

Australia, Belgium, Canada, England, France, Germany, Ireland, Italy, Japan, Netherlands, Spain, Switzerland, United States

© Copyright 1988 Bose Corporation. All rights reserved. Specifications subject to change without notice. Covered by patent rights issued and/or pending.

Bose, the Bose logo, Acoustimass, and Articulated Array are registered trademarks of Bose Corporation.

Armor All is a trademark of Armor All Products, division of McKesson Corporation.

Loctite is a registered trademark of Loctite Corporation. Sherwin Williams is a registered trademark of Sherwin-Williams Paints.

Printed in USA.

3758

PN 131666