BOSE 4401

BOSE CORPORATION · THE MOUNTAIN · FRAMINGHAM, MASS. 01701

SOLID STATE FOUR CHANNEL PREAMPLIFIER



SPECIFICATIONS

The 4401 preamplifier offers four independent channels from input to output with a capability of matrix decoding, discrete four-channel, or stereo operation. Signals from all current program sources, both stereo and quadraphonic, can be processed by the 4401.

The 4401 incorporates unique phono preamp circuitry, utilizing MET™ (Minimum Effective Temperature) circuitry accounting for the ultra-quiet operation of the phono preamp.

Optional circuitry for the SQ decoder and the CD-4 demodulator is contained on easily-installed, plug-in modules.*

Internal provisions for an additional four-channel module are provided for yet-to-be-developed four-channel systems.

The tone control circuits, as well as the high and low filters, can be used to process a signal prior to recording. Recordings can be made on two tape recorders simultaneously, and tapes can be copied from either tape recorder.

The 4401 provides separate jacks for the connection of external equalizers. A rear channel equalizer by-pass switch allows equalization of only the front channels without the use of jumper cables for the rear channels.

GENERAL

Separate left/right balance controls for both front and rear channels.

Independent front and rear channel tone controls.

Baxendall tone control circuits for optimum frequency contour control.

Output amplifiers capable of driving both low and high impedance headphones.

Time delay circuitry eliminating turn-on transients.

Two-position phono capacitance switch for optimum matching of conventional or CD-4 phono cartridges.

Optional SQ decoder and CD-4 demodulator plug-in modules.*

Optional remote balance/volume control.

ELECTRONIC

Input Sensitivity:

Phono 1	2mv@1kHz
Phono 2	2mv@1kHz
Tuner	200mv
Aux.	200mv
Tape 1	200mv
Tape 2	200mv

Rated Output:
2v RMS. ..... Minimum 7v RMS before overload.

Output Impedance:
600 ohms.

Input Impedance:

High Level	100k ohms
Phono (except CD-4 mode)	47k ohms
Phono (CD-4 mode)	100k ohms

Frequency Response:
High Level-20-20,000Hz ..... ±0.2db
RIAA Phono-Equalization ..... ±1db

Distortion:
Harmonic Distortion $\leq$ 0.2%, 20-20,000 Hz at rated output.
IM Distortion $\leq$ 0.2% at rated output.

Hum and Noise:
High Level . . . Minimum 80db below rated output. Noise typically 90db down.
Phono ..... 500 μV A weighted. (Unweighted, typically less than 1 mV.)

Low Filter:
-3db@70Hz, 6db per octave attenuation.

High Filter:
-3db@7kHz, 12db per octave attenuation.

Tone Control Range:

Bass	±15db@50Hz
Treble	±15db@20kHz
Volume Muting	-20db

POWER REQUIREMENTS

Voltage..... 105-130 Vac or 210-260 Vac
Frequency ..... 50-60 Hz (ac only)
Maximum power consumption.... 30 watts

MECHANICAL

Dimensions:
6" high x 18" wide x 13 1/8" deep.

Weight:
12 pounds.

8/75 107143

* SQ is a trademark of CBS Labs, Inc., and CD-4 is a trademark of JVC America, Inc.

SERVICE MANUAL

Section 1

DISASSEMBLY PROCEDURE

I. Removing the Phono Board

A. Remove the four screws holding the top cover in place.
B. Locate the three interboard supports holding the phono board in place. Using needle-nose pliers, squeeze the locking pin of the interboard support and gently slide the board over the top of each support. It is suggested that the board be lifted to the point of just keeping the support from locking again. Do not attempt to remove the board until all three pins have been unlocked.
C. Gently slide the phono preamp board up and off the interconnect points of J12 and J1 after releasing all three pins.

Special Note: When reassembling the phono preamp circuit to the upper board, be certain to align the pins of J1 first. Then, by rotating the preamp board sideways, easy alignment of the J12 pins can be accomplished, using the three interboard supports as guides for the reconnection of the printed circuit board.

II. CD-4 Four-Channel Decoding Board

After removing the top cover, locate the three interboard supports. Using needle-nose pliers, gently squeeze the locking pin of the interboard supports (as described in section IB) and slide the board up over the locking pins. (Do not attempt to remove the board until all three locking pins have been released.) Then gently pull the board towards the volume control side of the preamp, sliding the board away from the J201 connection pins.

III. Servicing the Top Board

A. After removing the four screws holding the top cover in place, remove the top cover.
B. If service of the section of the top board located under the phono preamp is required, see Section I above.
C. If service of the other components of the top board is required, locate the section of the circuit by using the appropriate diagram.

IV. Access to the Lower Printed Circuit Board [Exposed Foil Section]

A. Remove the seven screws holding the bottom cover in place.
B. If service to the power transformer or ac switched and unswitched outlets is required, voltage conversion, or other similar service, remove the power supply shield by unscrewing the rear chassis screw holding the shield in place. (This is necessary for voltage conversion changes as well.)
C. Access to all exposed components located on the lower board is now possible.

V. Access to Decoder Module

A. Access to the bottom board is obtained as indicated in Section IV. Repair of either module can be accomplished by simply removing the screws holding the module to the rear chassis bracket assembly and sliding the module off its respective pin assembly (J101 or J102).

VI. Service of Foil [Etch] of Upper or Lower Board

A. Remove the seven screws holding the bottom cover in place.
B. Remove the decoder module(s) plugged into the bottom board (at connection Points J101 or J102).
C. Remove the top cover by removing the four screws holding it in place.
D. Locate the stud coming from front panel (above the source push button) and remove the nut, lock-washer, and flat-washer.
E. Remove the knobs (not the push buttons) from the front panel. Be certain, when removing the knobs, to maintain the order and location of these knobs as they have been matched to each control for proper appearance and operation. (If difficulty is experienced in removing the knob, try using either insulated wire or heavy twine wrapped around the knob.)
F. Very carefully, remove the headphone locking nut found on the front panel. Extreme care should be taken to not scratch the front panel.
G. Remove the four ½ inch locking nuts holding the front panel in place.
H. Remove the two screws holding the lower pc board bracket assembly to the side chassis. These two screws are located near the front of the chassis on either side of the preamplifier.
I. On the upper board, locate the six interconnect pin assemblies, J2, 3, 5, 6, 7, 8. (do not remove J4.) Remove these six interconnect pin assemblies connecting the upper board to the lower board by gently pulling the pin assembly upward until they are disengaged from the lower board. (Needle-nose pliers may be used to lift the interconnect pin assemblies away from the connector on the upper pc board. Do not remove the pins from the upper board.)
J. Unlock the four interboard supports found near the rear edge of the lower pc board using needle-nose pliers. Do not attempt to raise the board off the supports, but rotate the board toward the front of the unit, releasing Connector J4 and the four interboard supports.
K. With the preamp laying on its top with the volume control nearest the bench, lift the lower pc board out of the chassis assembly and lay it to your left. This completes major disassembly for service to the foil side of both printed-circuit boards.

Special Note #1: Care should be taken when extending the power transformer and headphone cables so that no tension is placed on the cable assemblies. It is unnecessary to unplug the power transformer when servicing the unit.
Special Note #2: When reassembling the preamp, make certain that interconnect board locking pins are secure when repositioning the board assemblies. Also, J4 interboard can be reinserted using a flat-blade screwdriver.

PARTS LIST

SYMBOL	DESCRIPTION	PART NUMBER
	CHASSIS & FRONT PANEL ASSEMBLY	
	Capacitors	
	0.0047 µf, 1.4 kV Disc	103447
	Inductors	
T-1	Power Transformer	103883
	Miscellaneous	
	Front & Rear Headphone Plug-In Assy	104965
	Internal Headphone Washer	103769
	Internal Headphone Hex Nut	103033
	Front Panel Headphone Knurled Nut	103545
	Pushbutton Sleeve	104547
	Locking Interboard Support	103924-10
	Pilot Light Socket	103834
	Locking Phono Board Support	104870-18
	On/Off Switch Bracket	104510
S-15	On/Off Switch	103847
	Power Switch Screw	103150-03
	Lamp #1847	102580
	Knob, Large	104327
	Knob, Small	104328
	Knob, Inner	104329
	Knob, Outer	104330
	Knob, Pushbutton	103877
	Left Side Panel	103863
	Right Side Panel	103864
	Side Panel Screws	103122-05
	Top Cover	103871
	Bottom Cover	103872
	Bottom & Top Cover Screws	103122-05
	Jewel, Pilot Light	103460
F-1	Fuse 1/2A, Slow Blo 250 V	104714-050
	Rubber Foot	103887
	Rubber Foot Screw	103122-08
	Chassis Ground Post	103862
	Remote Balance Receptacle	103844
	Fuse Holder	102707
	Accessory Outlet	103830
	Headphone Jack	104570
	PHONO BOARD	
	Resistors	
R104, 304	1/2 W, Comp, 360, 5% Low Noise	102943-361
R2	1/4 W, Film, 10.0 K, 1%	104095-1002
R102, 302	1/4 W, Film, 28.7 K, 1%	104095-2872
R103, 303	1/4 W, Film, 365 K, 1%	104095-3653
R1	1/4 W, Film, 4.99 K, 1%	104095-4991
	Capacitors	
C108, 308	0.01 µf Disc	103730
C1, 2, 106, 306	5 µf, 25 V, Electrolytic	103735
C103, 105, 303, 305	0.0027 µf, 5%, 50 V, Mylar	103914
C101, 301	1 µf, 25 V, Electrolytic	104015
C3	47 µf, 50 V, Electrolytic	104016
C102, 107, 302, 307	130 pf, 300 V, 10%, Disc	104017
C104, 304	0.0091 µf, 5%, 50 V, Mylar	104018
C109, 309	0.47 µf, 25 V, Electrolytic	104817
	Semiconductors	
Q101, 103, 301, 303	Transistor, NPN, Low Noise, BC239C	102437-2
Q102, 104, 302, 304	2N5086	103925
Q105, 305	N Channel FET, E111	104019
	Miscellaneous	
J1 (2), 12	6-Circuit PC Connector, Bottom Insert	103837
J201	Right-Angle Connector, 15-Circuit	103842
	UPPER PC BOARD	
	Resistors	
R1	Potentiometer, 4-Section Volume Control	103740
	Capacitors	
C109, 111, 209, 211, 309, 311, 409, 411, 112, 212, 312, 412	5 µf, 25 V, Electrolytic	100260-1
C110, 210, 310, 410	22 pf, 10%, 200 V, Disc	103725
C107, 207, 307, 407,	220 pf, 10%, 200 V, Disc	103726

SYMBOL	DESCRIPTION	PART NUMBER
	UPPER PC BOARD (Cont'd.)	
	Capacitors	
C1, 2, 3, 4, 105, 205, 305, 405	270 pf, 10%, 200 V, Disc	103727
C9, 103, 104, 203, 204, 303, 304, 403, 404	0.001 µf, 10%, 200 V, Disc	103729
C5, 6, 7, 8	0.01 µf, Disc	103730
C102, 202, 302, 402	0.022 µf, 10%, 50 V, Mylar	103731
C108, 208, 308, 408	0.047 µf, 10%, 50 V, Mylar	103732
C101, 201, 301, 401, 106, 206, 306, 406	5 µf, Nonpolar, 15 V, Electrolytic	103737
C113, 213, 313, 413	15 µf, 25 V, Nonpolar, Electrolytic	103946
	Semiconductors	
U1, U2	Quad Op Amp, RC4136DP	103848
Q101, 201, 301, 401	2N3569	103850
Q102, 202, 302, 402	2N3644	103851
Q103, 203, 303, 403	N Channel FET, E111	104019
	Miscellaneous	
	Phono Jack, PC Mounted	103832
J2, 3, 4, 5, 6, 7, 8	6-Circuit PC Connector, Top Insert	103838
J9, 10, 11	5-Circuit Interconnect Pin	103839
J1(2), 2, 3, 4, 5, 6, 7, 8, 12	6-Circuit Interconnect Pin	103841
U1, U2	IC Terminal Strip	103922
U1, U2	Nylon IC Nest	103923
S5, 6, 9, 10, 11, 12, 13	Pushbutton Switch Assy	103719
S3	Source Switch	103738
S1, 2, 14	Phono Capacitance/Equalizer Bypass Switch	103846
	Phono Locking Support	104870-18
	LOWER PC BOARD	
	Resistors	
R3	1/2 W, Comp, 62, 5%	102942-620
R5	1/2 W, Comp, 750, 5%	102942-751
R18	Pot, Front/Back Balance Control	103741
R19	Pot, Left/Right Balance Control	103742
R20, 21	Pot, 4-Section Tone Control	103907
	Capacitors	
C8, 9	5 µf, 25 V, Electrolytic	100260-1
C103, 203, 303, 403	22 pf, 20%, 200 V, Disc	103725
C102, 202, 302, 402	220 pf, 10%, 200 V, Disc	103728
C1, 2, 3, 4	0.01 µf, Disc	103730
C5, 6	1000 µf, 35 V, Electrolytic	103736
C101, 201, 301, 401	0.068 µf, 5%, 50 V, Mylar	103948
C7	47 µf, 50, V Electrolytic	104016
	Semiconductors	
Q2	PNP PWR TIP-30	102016-1
CR1, 2, 3, 4, 15, 16	1N4002	102020-1
U1	Quad Op Amp, RC4136DP	103848
Q4	NPN PWR TIP-29	103849
Q1, 3, 5	2N3644	103851
CR5, 6, 7, 9, 10, 11, 12, 13, 14, 18	Diode 1N4148	102410
CR8, 17	Diode, Zener, 15 V	103763
	Miscellaneous	
	Heat Sink	103859
J2, 3, 4, 5, 6, 7, 8	6-Circuit PC Connector, Bottom Insert	103837
J101, 102	Right-Angle Connector, 15-Circuit	103842
U1	IC Terminal Strip	103922
U1	Nylon IC Nest	103923
S1	Mode Switch	103815
	Locking Interboard Support	103924-10

COMPLETE ASSEMBLIES

Phono Board	103662
Front Panel Assy	103654
Upper Board Assy	103660
Lower Board Assy	103661
Carton Assy	104723
Owner's Manual	104296

NOTE: All parts not listed are readily available from local parts supply houses.

UPPER BOARD

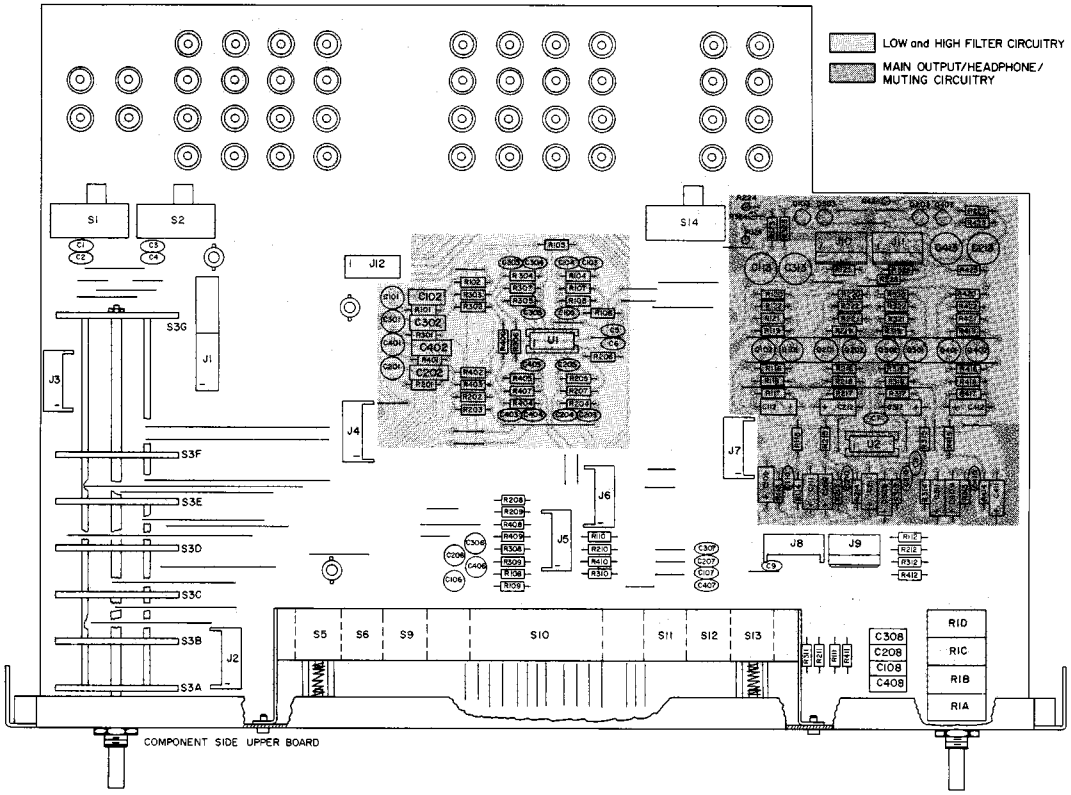

LOWER BOARD

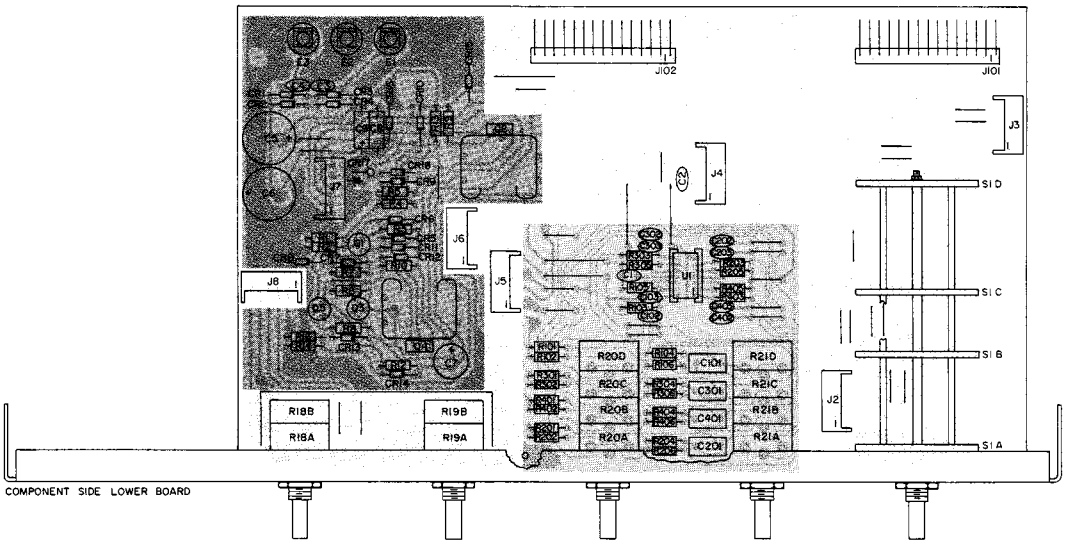

PHONO BOARD

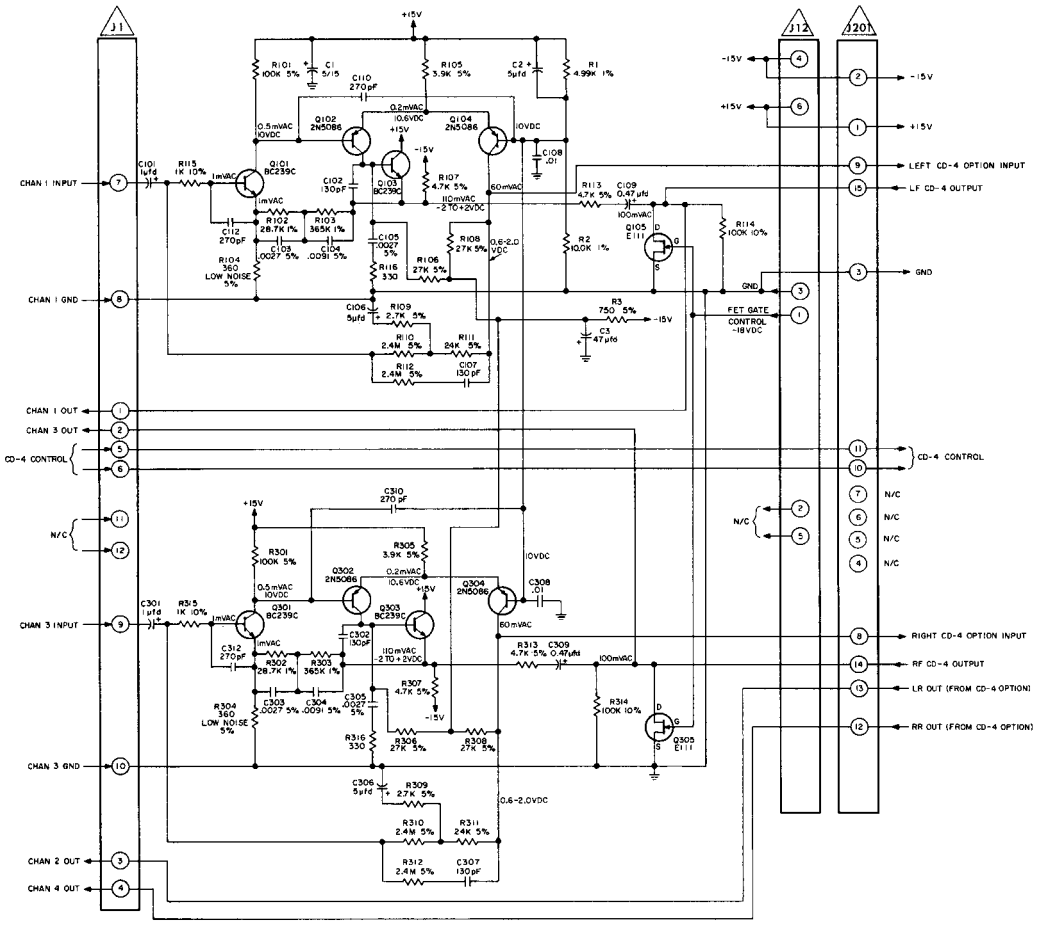

NOTES:

1. UNLESS OTHERWISE SPECIFIED:
   ALL RESISTORS ARE 1/2 WATT, 10%
   ALL CAPACITORS ARE IN MFD.
2. AC SIGNAL TRACING MEASUREMENTS OF THE PHONO PREAMP BOARD ARE MADE WITH A SINE WAVE AT 1kHz and AT 1 MILLIVOLT INPUT.
3. TYPICAL DC VOLTAGES ARE SHOWN ON THE SCHEMATIC AT SIGNIFICANT POINTS OF THE CIRCUIT. 10 PERCENT VARIANCE OF THESE VOLTAGES CAN BE CONSIDERED NORMAL.
4. AC and DC VOLTAGES ARE BOTH SHOWN ON CHANNEL 1 ON THE PHONO PREAMP SCHEMATIC.

△ INDICATES AN INTERBOARD CONNECTOR

COMPONENT SIDE		
Q101, 103, 301, 303	BC239C
Q102, 104, 302, 304	2N5086
Q105, 305	FET E111

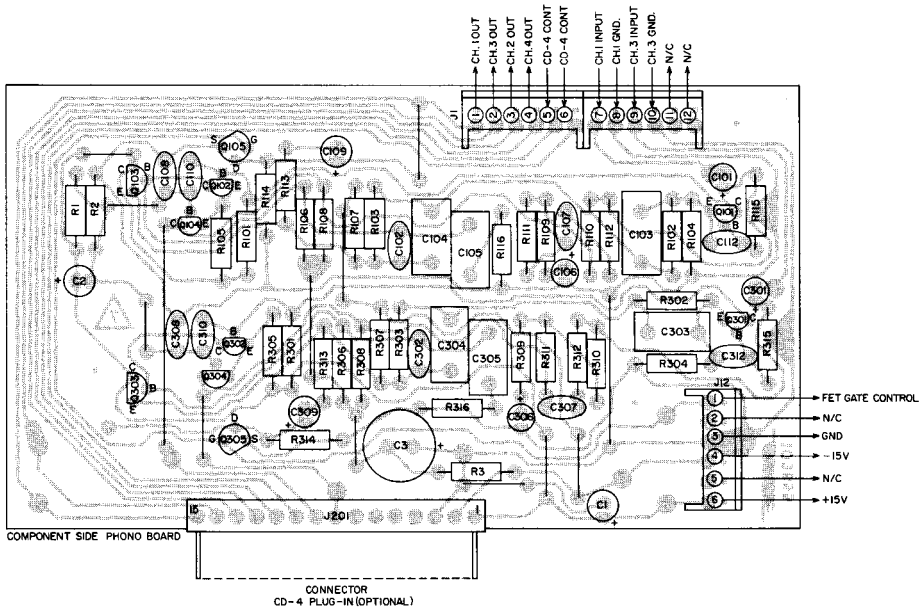

POWER SUPPLY

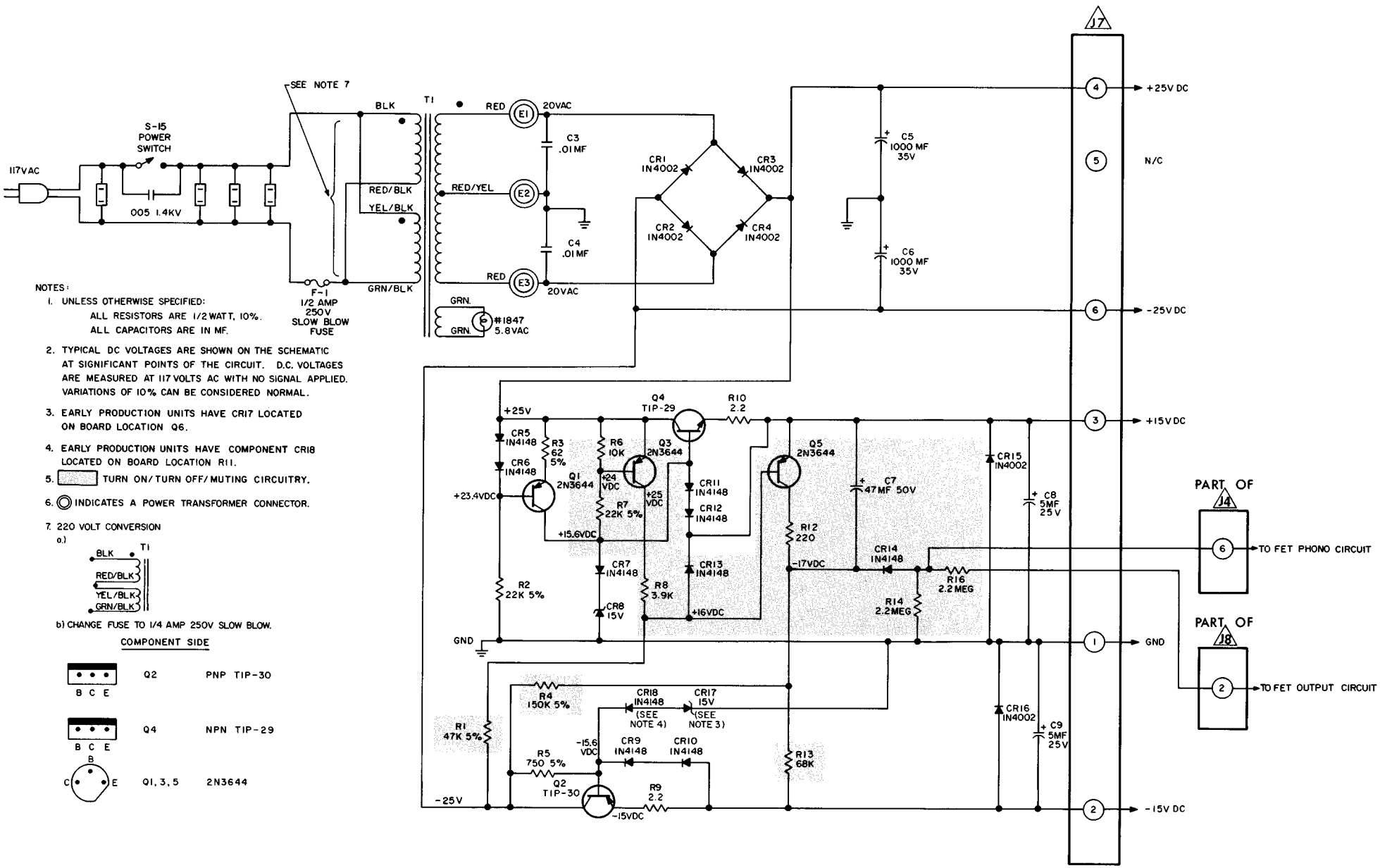

NOTES:

1. UNLESS OTHERWISE SPECIFIED:
   ALL RESISTORS ARE 1/2 WATT, 10%.
   ALL CAPACITORS ARE IN MF.
2. TYPICAL DC VOLTAGES ARE SHOWN ON THE SCHEMATIC AT SIGNIFICANT POINTS OF THE CIRCUIT. D.C. VOLTAGES ARE MEASURED AT 117 VOLTS AC WITH NO SIGNAL APPLIED. VARIATIONS OF 10% CAN BE CONSIDERED NORMAL.
3. EARLY PRODUCTION UNITS HAVE CR17 LOCATED ON BOARD LOCATION Q6.
4. EARLY PRODUCTION UNITS HAVE COMPONENT CR18 LOCATED ON BOARD LOCATION R11.
5. ▭ TURN ON/TURN OFF/MUTING CIRCUITRY.
6. ◎ INDICATES A POWER TRANSFORMER CONNECTOR.
7. 220 VOLT CONVERSION
   a.)

   b) CHANGE FUSE TO 1/4 AMP 250V SLOW BLOW.

COMPONENT SIDE

Q2 PNP TIP-30

Q4 NPN TIP-29

Q1, 3, 5 2N3644

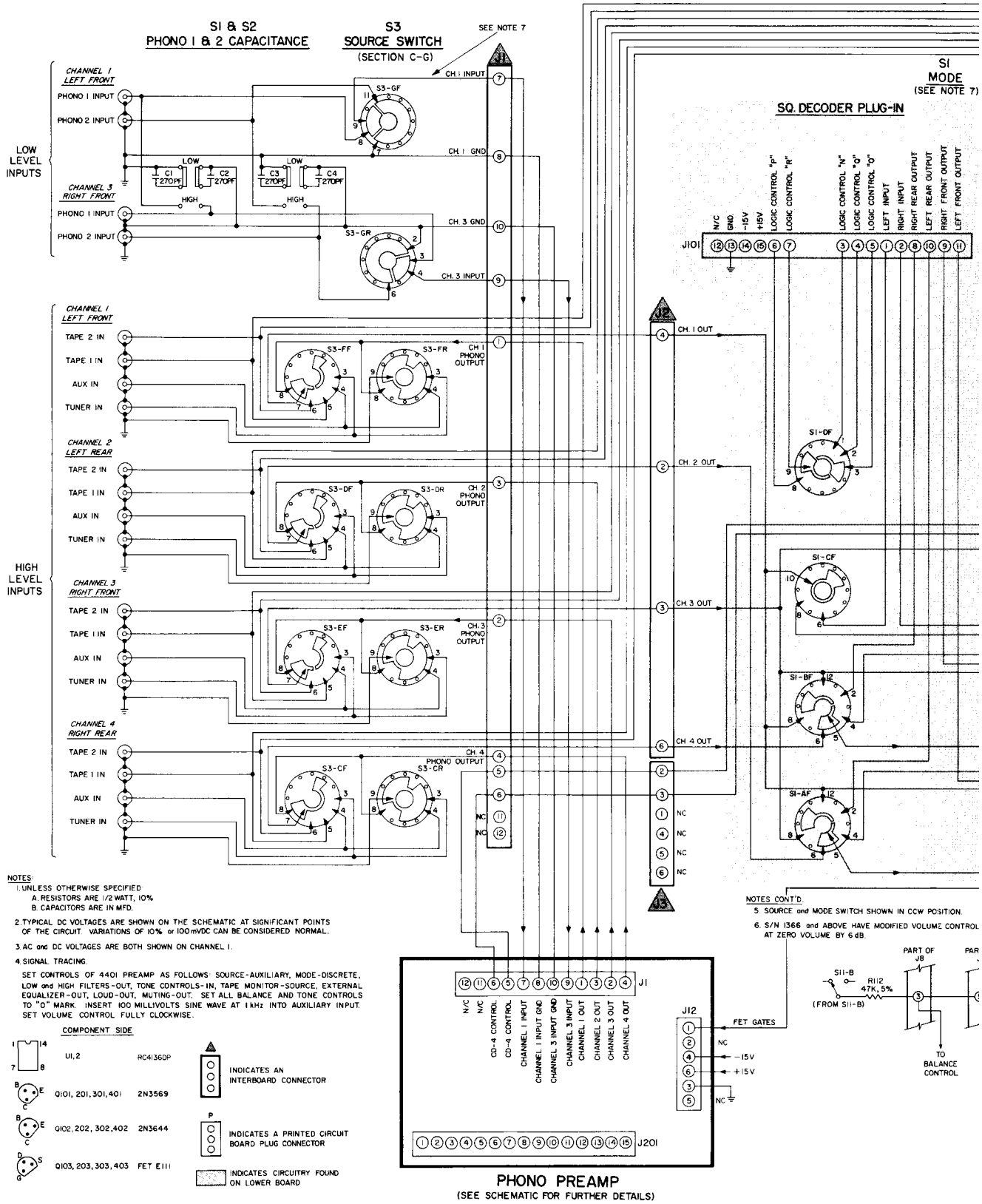

NOTES:

1. UNLESS OTHERWISE SPECIFIED:
   A. RESISTORS ARE 1/2 WATT, 10%
   B. CAPACITORS ARE IN MFD.
2. TYPICAL DC VOLTAGES ARE SHOWN ON THE SCHEMATIC AT SIGNIFICANT POINTS OF THE CIRCUIT. VARIATIONS OF 10% or 100 mVDC CAN BE CONSIDERED NORMAL.
3. AC and DC VOLTAGES ARE BOTH SHOWN ON CHANNEL 1.
4. SIGNAL TRACING.

   SET CONTROLS OF 4401 PREAMP AS FOLLOWS: SOURCE-AUXILIARY, MODE-DISCRETE, LOW and HIGH FILTERS-OUT, TONE CONTROLS-IN, TAPE MONITOR-SOURCE, EXTERNAL EQUALIZER-OUT, LOUD-OUT, MUTING-OUT. SET ALL BALANCE AND TONE CONTROLS TO "0" MARK. INSERT 100 MILLIVOLTS SINE WAVE AT 1 kHz INTO AUXILIARY INPUT. SET VOLUME CONTROL FULLY CLOCKWISE.

NOTES CONT'D.

5. SOURCE and MODE SWITCH SHOWN IN CCW POSITION.
6. S/N 1366 and ABOVE HAVE MODIFIED VOLUME CONTROL AT ZERO VOLUME BY 6 dB.

CONSUMERS CONCERNED WITH HIGH ZERO VOLUME NOISE SHOULD FIRST BE REQUESTED TO ADJUST THEIR HIGH FIDELITY SYSTEM FOR OPTIMUM SYSTEM NOISE PERFORMANCE. START BY SETTING THE 4401 VOLUME CONTROL AT ZERO AND THE POWER AMP GAIN CONTROL AT FULL VOLUME. IF NOISE IS HEARD IN THE SPEAKERS, REDUCE THE POWER AMP GAIN CONTROL UNTIL THE NOISE JUST BECOMES INAUDIBLE. ALTERNATIVELY, UNITS CAN BE RETURNED TO BOSE FOR THE WARRANTY MODIFICATION, SHOWN ON THE ABOVE SCHEMATIC.

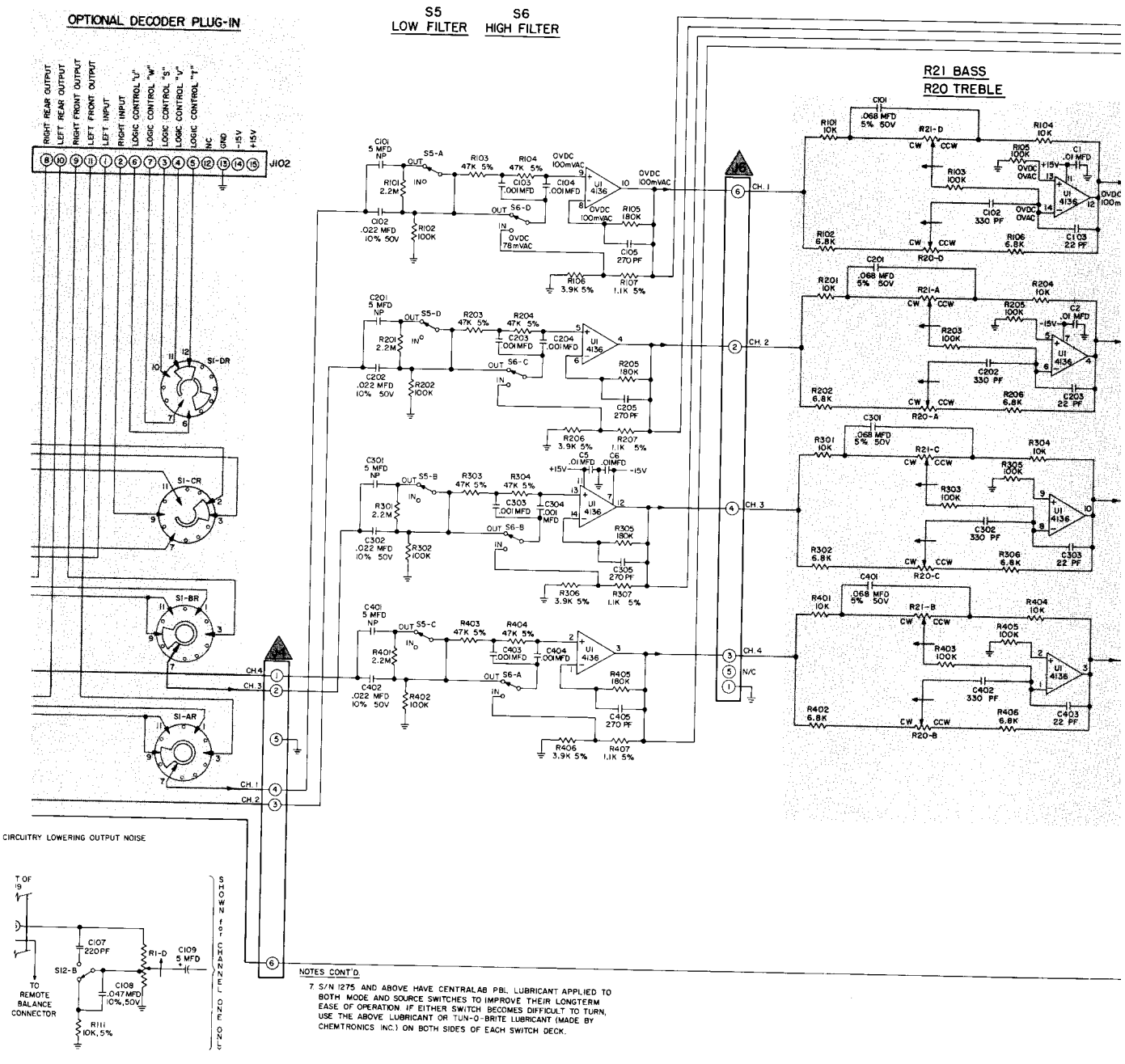
OPTIONAL DECODER PLUG-IN
S5 LOW FILTER
S6 HIGH FILTER
R21 BASS
R20 TREBLE
RIGHT REAR OUTPUT
LEFT REAR OUTPUT
RIGHT FRONT OUTPUT
LEFT FRONT OUTPUT
LEFT INPUT
RIGHT INPUT
LOGIC CONTROL "D"
LOGIC CONTROL "W"
LOGIC CONTROL "S"
LOGIC CONTROL "Y"
LOGIC CONTROL "T"
INC
GND
-15V
+15V
J102
S1-DR
S1-CR
S1-BR
S1-AR
CH.4
CH.3
CH.1
CH.2
N/C
CIRCUITRY LOWERING OUTPUT NOISE
TO REMOTE BALANCE CONNECTOR
SHOWN FOR CHANNEL ONE
NOTES CONT'D.
7. S/N 1275 AND ABOVE HAVE CENTRALAB PBL LUBRICANT APPLIED TO BOTH MODE AND SOURCE SWITCHES TO IMPROVE THEIR LONGTERM EASE OF OPERATION. IF EITHER SWITCH BECOMES DIFFICULT TO TURN, USE THE ABOVE LUBRICANT OR TUN-O-BRITE LUBRICANT (MADE BY CHEMTRONICS INC.) ON BOTH SIDES OF EACH SWITCH DECK.

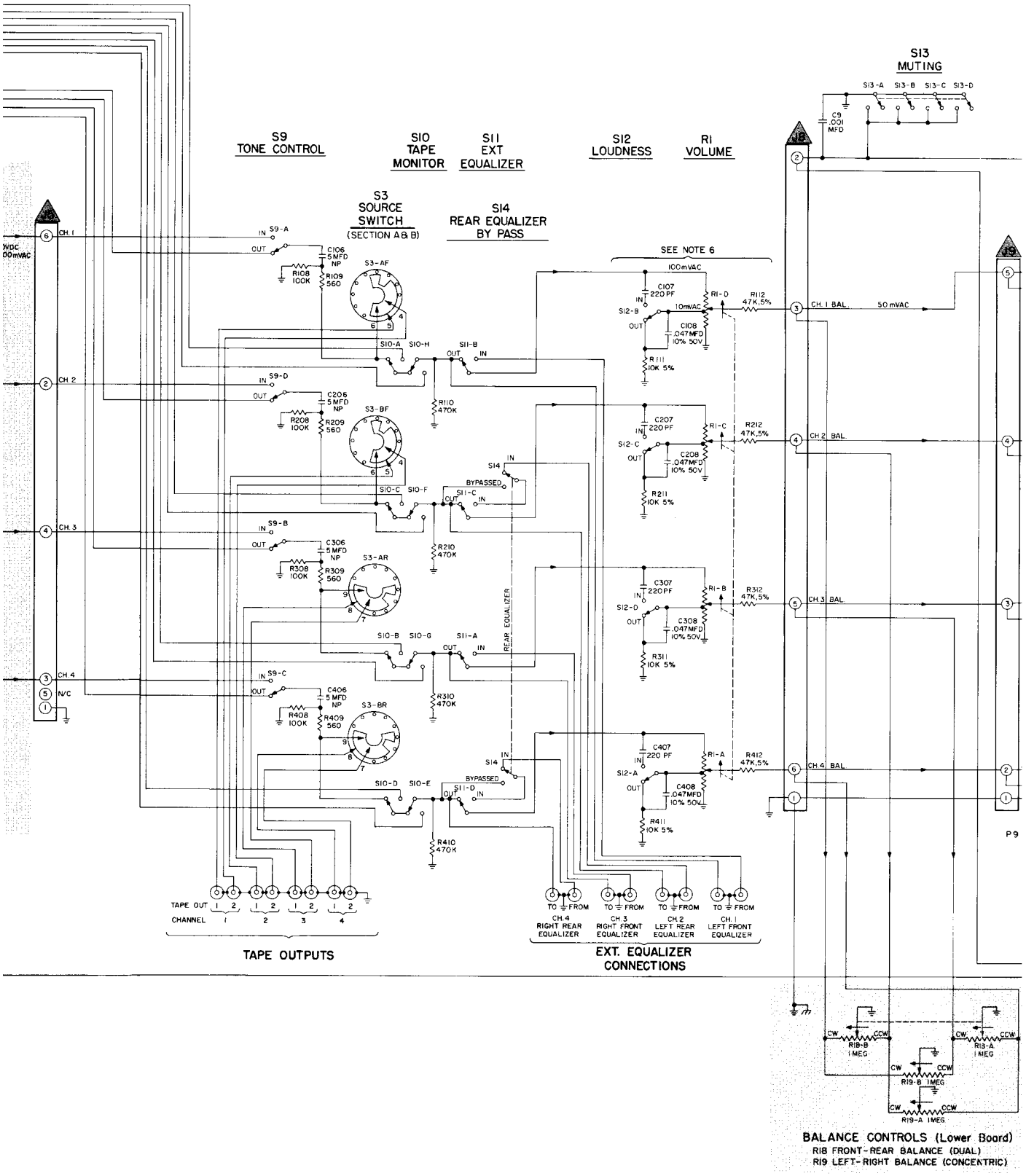
S9
TONE CONTROL
S10
TAPE
MONITOR
S11
EXT
EQUALIZER
S12
LOUDNESS
R1
VOLUME
S13
MUTING
S3
SOURCE
SWITCH
(SECTION A & B)
S14
REAR EQUALIZER
BY PASS
SEE NOTE 6
100mVAC
CH. 1
CH. 2
CH. 3
CH. 4
N/C
CH. 1 BAL.
CH. 2 BAL.
CH. 3 BAL.
CH. 4 BAL.
50 mVAC
BYPASSED
REAR EQUALIZER
TAPE OUT
CHANNEL
TAPE OUTPUTS
TO FROM
CH. 4 RIGHT REAR EQUALIZER
CH. 3 RIGHT FRONT EQUALIZER
CH. 2 LEFT REAR EQUALIZER
CH. 1 LEFT FRONT EQUALIZER
EXT. EQUALIZER CONNECTIONS
BALANCE CONTROLS (Lower Board)
R18 FRONT-REAR BALANCE (DUAL)
R19 LEFT-RIGHT BALANCE (CONCENTRIC)
P9

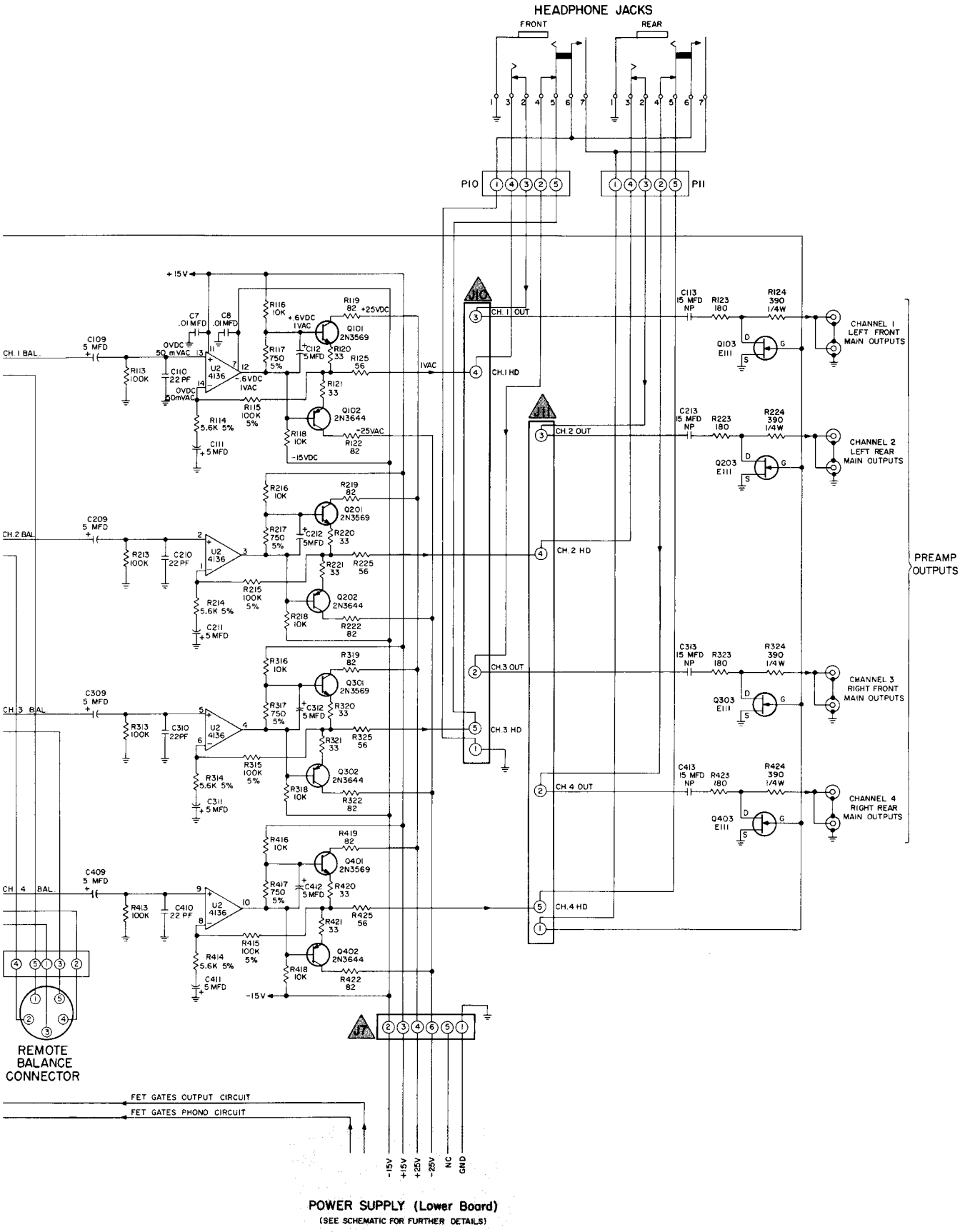
HEADPHONE JACKS
FRONT
REAR
P10
P11
J10
J11
J12
CH. 1 BAL.
CH. 2 BAL.
CH. 3 BAL.
CH. 4 BAL.
CH. 1 OUT
CH. 2 OUT
CH. 3 OUT
CH. 4 OUT
CH. 1 HD
CH. 2 HD
CH. 3 HD
CH. 4 HD
CHANNEL 1 LEFT FRONT MAIN OUTPUTS
CHANNEL 2 LEFT REAR MAIN OUTPUTS
CHANNEL 3 RIGHT FRONT MAIN OUTPUTS
CHANNEL 4 RIGHT REAR MAIN OUTPUTS
PREAMP OUTPUTS
REMOTE BALANCE CONNECTOR
FET GATES OUTPUT CIRCUIT
FET GATES PHONO CIRCUIT
-15V
+15V
+25V
-25V
NC
GND
POWER SUPPLY (Lower Board)
(SEE SCHEMATIC FOR FURTHER DETAILS)