2600 Trimmer Calibration Manual

Trimmer Description:

(1) VCO1 OFFSET

(2) VCO1 SCALE

(3) VCO2 SYMMETRY

(4) VCO2 OFFSET

(5) VCO2 SCALE

(6) VCO2 DC OFFSET

(7) VCO2 PURITY

(8) VCO2 GAIN

(9) VCO2 SYMMETRY

(10) VCO2 OFFSET

(11) VCO2 SCALE

(12) VCO2 DC OFFSET

(13) VCO2 PURITY

(14) VCO2 GAIN

(15) DC -15V

(16) DC +15V

(17) 4012 VCF FREQ CAL

(18) 4012 VCF VCF SCALE

(19) 4012 VCF OUTPUT OFFSET

(20) 4012 VCF GAIN

(21) 4072 VCF FREQ CAL

(22) 4072 VCF BIAS TRIM

(23) 4072 VCF OUTPUT OFFSET

(24) 4072 VCF GAIN

(25) VCA LINEAR GAIN

(26) Reserved

(27) VCA CONTROL REJ

(28) VCA EXPONENTIAL GAIN

(29) RING MOD GAIN

(30) RING MOD POS NULL

(31) RING MOD NEG NULL

(32) Reserved

(33) S&H PUSE WIDTH TRIM

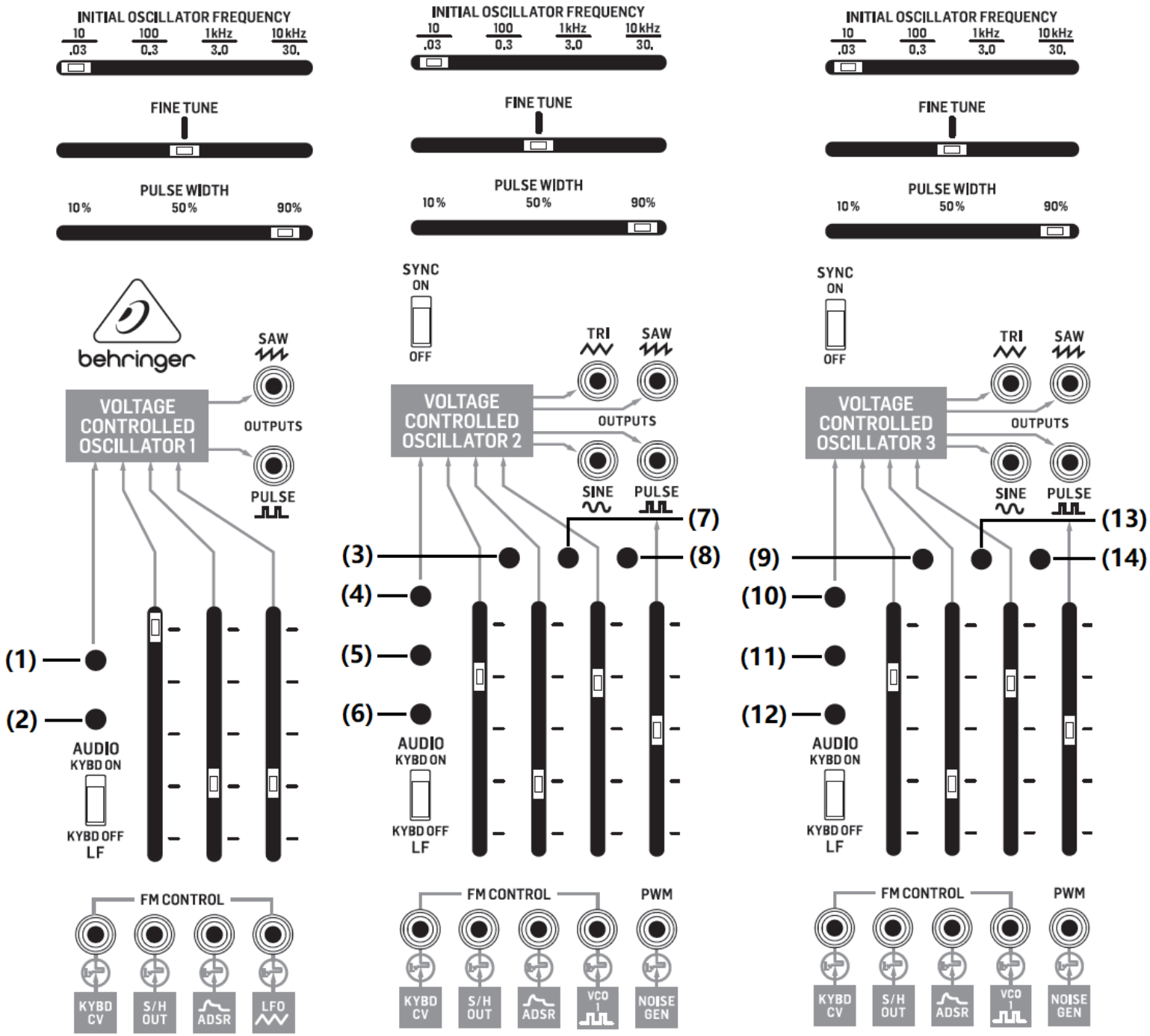
INITIAL OSCILLATOR FREQUENCY
10
.03
100
0.3
1kHz
3.0
10kHz
30.
FINE TUNE
PULSE WIDTH
10%
50%
90%
behringer
VOLTAGE CONTROLLED OSCILLATOR 1
SAW
OUTPUTS
PULSE
(1)
(2)
AUDIO
KYBD ON
KYBD OFF
LF
FM CONTROL
KYBD CV
S/H OUT
ADSR
LFO
SYNC
ON
OFF
VOLTAGE CONTROLLED OSCILLATOR 2
TRI
SAW
OUTPUTS
SINE
PULSE
(3)
(4)
(5)
(6)
(7)
(8)
AUDIO
KYBD ON
KYBD OFF
LF
FM CONTROL
PWM
KYBD CV
S/H OUT
ADSR
VCO 1
NOISE GEN
SYNC
ON
OFF
VOLTAGE CONTROLLED OSCILLATOR 3
TRI
SAW
OUTPUTS
SINE
PULSE
(9)
(10)
(11)
(12)
(13)
(14)
AUDIO
KYBD ON
KYBD OFF
LF
FM CONTROL
PWM
KYBD CV
S/H OUT
ADSR
VCO 1
NOISE GEN

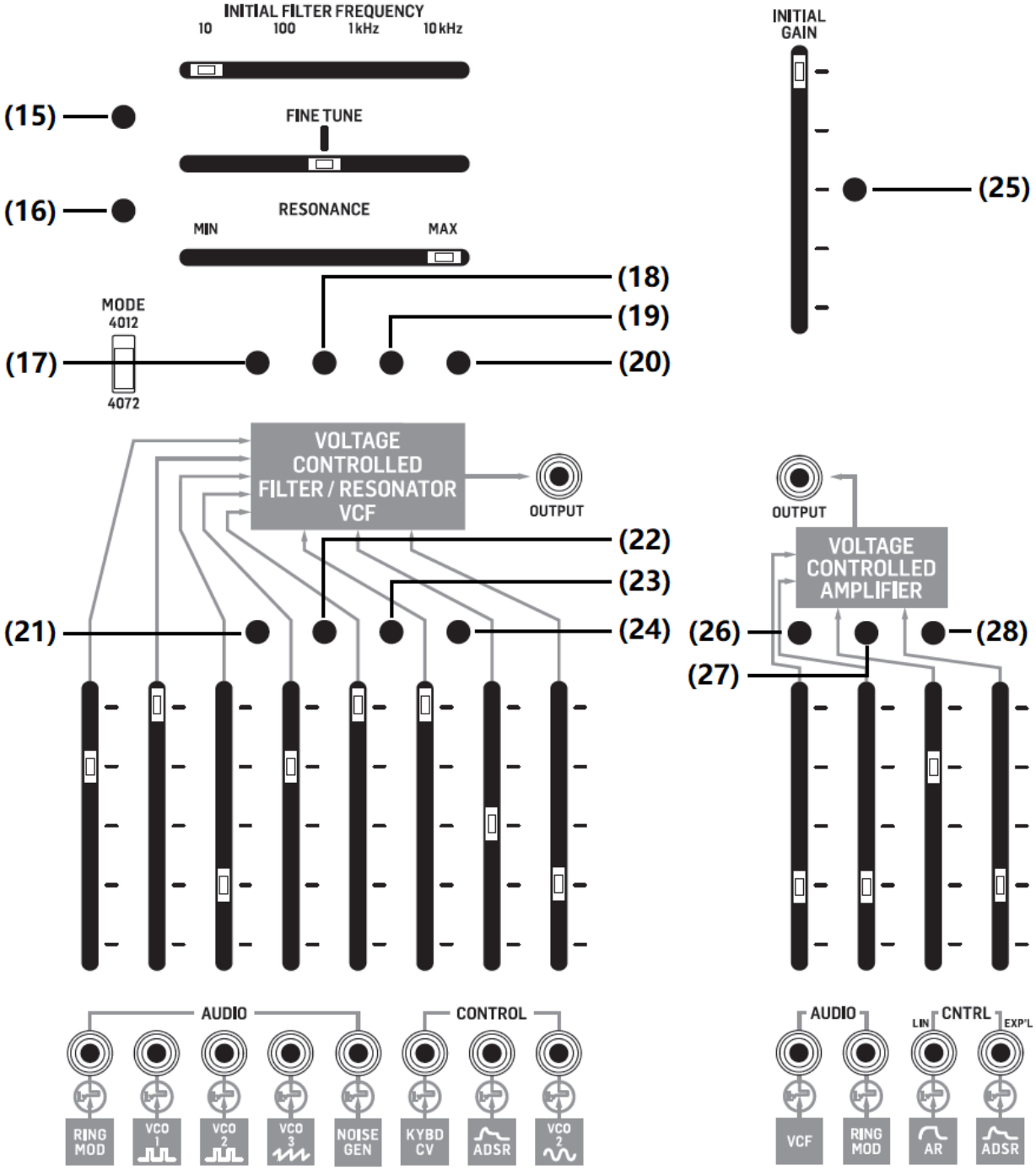
INITIAL FILTER FREQUENCY
10
100
1kHz
10kHz
(15)
FINE TUNE
(16)
RESONANCE
MIN
MAX
(18)
(19)
MODE
4012
(17)
4072
(20)
INITIAL GAIN
(25)
VOLTAGE CONTROLLED FILTER / RESONATOR VCF
OUTPUT
(22)
(23)
(21)
(24)
OUTPUT
VOLTAGE CONTROLLED AMPLIFIER
(26)
(28)
(27)
AUDIO
CONTROL
RING MOD
VCO 1
VCO 2
VCO 3
NOISE GEN
KYBD CV
ADSR
VCO 2
AUDIO
CNTRL
LIN
EXP'L
VCF
RING MOD
AR
ADSR
RING MOD
OUTPUT
(29)
(30)
(31)
AUDIO
DC
VCO 1
VCO 2
NOISE GENERATOR
(32)
OUTPUT
COLOR
LEVEL
WHITE
PINK
LOW FREQ
MAX
MIN
SAMPLE & HOLD
ELEC SWITCH
(33)
LEVEL
RATE
A
B
NOISE GEN
INT CLK OUT
S/H OUT
EXT CLK IN
C
INT CLOCK

Module	Trimmer	Description	Procedure
CV	NC	NC	1. Please reference Behringer SynthTool for this calibration.
VCO1	VCO1 OFFSET VCO1 SCALE	VCO1 Frequency Baseline and Octave Range	1. Monitor VCO1 PULSE OUTPUTS with a Frequency Counter. 2. Set INITIAL OSCILLATOR FREQUENCY , FINE TUNE and PULSE WIDTH to center, S/H OUT , ADSR and LFO to minimum, LFO SPEED , VIB DELAY and VIB DEPTH to minimum, REPEAT switch to center , AUDIO switch to KYBD ON . 3. Depress A1 and adjust OFFSET trimmer for 55.00 Hz ± 3 cents. 4. Depress A6 and adjust SCALE trimmer for 1760.00 Hz ± 3 cents. 5. Repeat steps 3 and 4 until A1 and A6 are correct. 6. Depress A4 and confirm output Frequency is 440.00 Hz.
VCO2	VCO2 OFFSET VCO2 SCALE	VCO2 Frequency Baseline and Octave Range	1. Monitor VCO2 PULSE OUTPUTS with a Frequency Counter. 2. Set FREQUENCY , FINE TUNE and PULSE WIDTH to center, S/H OUT , ADSR, VCO1 and NOISE GEN to minimum, LFO SPEED , VIB DELAY and VIB DEPTH to minimum, REPEAT switch to center , AUDIO switch to KYBD ON, SYNC switch to OFF . 3. Depress A1 and adjust OFFSET trimmer for 55.00 Hz ± 3 cents. 4. Depress A6 and adjust SCALE trimmer for 1760.00 Hz ± 3 cents. 5. Repeat steps 3 and 4 until A1 and A6 are correct. 6. Depress A4 and confirm output Frequency is 440.00 Hz.
	VCO2 SYMMETRY DC OFFSET	VCO2 Triangle Waveform Shape	1. Monitor the VCO2 TRI OUTPUTS with an oscilloscope. 2. Adjust SYMMETRY trimmer for accurate triangle waveform at the top of the wave, with no glitch. 3. Adjust DC OFFSET trimmer to get the output level value Vmax = Vmin.
	VCO2 PURITY GAIN	VCO2 Sine Waveform Shape	1. Monitor the VCO2 SINE OUTPUTS with an oscilloscope. 2. Adjust PURITY trimmer for Vrms=12V ± 0.5V. 3. Adjust GAIN trimmer for Vpp=10V± 0.5V. 4. Lightly adjust PURITY trimmer for output wave as sine wave.

VCO3	VCO3 OFFSET VCO3 SCALE	VCO3 Frequency Baseline and Octave Range	1. Monitor VCO3 PULSE OUTPUTS with a Frequency Counter. 2. Set FREQUENCY , FINE TUNE and PULSE WIDTH to center, NOISE GEN , ADSR, VCO2 and ADSR to minimum, LFO SPEED , VIB DELAY and VIB DEPTH to minimum, REPEAT switch to center , AUDIO switch to KYBD ON, SYNC switch to OFF . 3. Depress A1 and adjust OFFSET trimmer for 55.00 Hz ± 3 cents. 5. Depress A6 and adjust SCALE trimmer for 1760.00 Hz ± 3 cents. 6. Repeat steps 3 and 4 until A1 and A6 are correct. 7. Depress A4 and confirm output Frequency is 440.00 Hz.
	VCO3 SYMMETRY DC OFFSET	VCO3 Triangle Waveform Shape	1. Monitor the VCO3 TRI OUTPUTS with an oscilloscope. 2. Adjust SYMMETRY trimmer for accurate triangle waveform at the top of the wave, with no glitch. 3. Adjust DC OFFSET trimmer to get the output level value Vmax = Vmin.
	VCO3 PURITY GAIN	VCO3 Sine Waveform Shape	1. Monitor the VCO3 SINE OUTPUTS with an oscilloscope. 2. Adjust PURITY trimmer for Vrms=12V± 0.5V. 3. Adjust GAIN trimmer for Vpp=10V± 0.5V. 4. Lightly adjust PURITY trimmer for output wave as sine wave.
VCF	4012 OUTPUT OFFSET	VCF 4012 Output Offset	1. Set VCF MOD switch to 4012. 2. Monitor the VCF output with an oscilloscope that can read frequency. 3. Set INITIAL FREQUENCY fader to maximum. 4. Set FINE TUNE fader to center. 5. Set RESONANCE fader to minimum. 6. Set all VCF input fader to minimum. 7. Adjust 4012 OUTPUT OFFSET trimmer for D.C. output to ±100mV.
	4012 FREQ CAL	VCF 4012 Frequency Calibrate	1. Set VCF MOD switch to 4012. 2. Monitor the VCF output with an oscilloscope that can read frequency. 3. Set INITIAL FREQUENCY fader to minimum. 4. Set FINE TUNE fader to center. 5. Set RESONANCE fader to maximum.

			6. Set all VCF input fader to minimum. 7. Adjust 4012 FREQ CAL trimmer for output 10Hz±0.5Hz(9.5 Hz – 10.5 Hz).
	4012 VCF SCALE	VCF 4012 1V/Octave	1. Set VCF MOD switch to 4012. 2. Using a keyboard or MIDI-OX let the CV output +3V, Or outside +3V CV input to the KYBD CV jack. 3. Monitor the VCF output with an oscilloscope that can read frequency. 4. Set INITIAL FREQUENCY fader to center. 5. Set FINE TUNE fader to center. 6. Set RESONANCE fader to maximum. 7. Set all VCF input fader to minimum. 8. Set KYBD CV fader to minimum. 9. Adjust INITIAL FREQUENCY fader and FINE TUNE for output frequency 200Hz ±3Hz(197Hz – 203Hz). 10. Set KYBD CV fader to maximum. 11. Adjust 4012 VCF SCALE trimmer for output frequency 1600Hz ±5Hz(1595 Hz – 1605 Hz) . 12. Repeat steps 8, 9, 10, 11 frequency until all are correct.
	4012 GAIN	VCF 4012 Gain	1. Set VCF MOD switch to 4012. 2. Monitor the VCF output with an oscilloscope that can read frequency. 3. Set INITIAL FREQUENCY fader to maximum. 4. Set FINE TUNE fader to center. 5. Set RESONANCE fader to minimum. 6. Set VCO1 fader to maximum, Other VCF input fader to minimum. 7. Adjust 4012 GAIN trimmer for output to Vpp=10V± 0.5V.
	4072 OUTPUT OFFSET	VCF 4072 Output Offset	1. Set VCF MOD switch to 4072. 2. Monitor the VCF output with an oscilloscope that can read frequency. 3. Set INITIAL FREQUENCY fader to maximum. 4. Set FINE TUNE fader to center.

			5. Set RESONANCE fader to minimum. 6. Set all VCF input fader to minimum. 7. Adjust 4072 OUTPUT OFFSET trimmer for D.C. output to ±100mV.
	4072 BIAS TRIM	VCF 4072 Bias Trim	1. Set VCF MOD switch to 4072. 2. Monitor the VCF output with an oscilloscope that can read frequency. 3. Set INITIAL FREQUENCY fader to minimum. 4. Set FINE TUNE fader to center. 5. Set RESONANCE fader to maximum. 6. Set all VCF input fader to minimum. 7. Adjust 4072 Bias Trim trimmer for output to to Vpp=10V± 0.5V.
	4072 FREQ CAL	VCF 4072 Frequency Calibrate	1. Set VCF MOD switch to 4072. 2. Monitor the VCF output with an oscilloscope that can read frequency. 3. Set INITIAL FREQUENCY fader to minimum. 4. Set FINE TUNE fader to center. 5. Set RESONANCE fader to maximum. 6. Set all VCF input fader to minimum. 7. Adjust 4072 FREQ CAL trimmer for output 10Hz±0.5Hz(9.5 Hz – 10.5 Hz).
	4072 GAIN	VCF 4072 Gain	1. Set VCF MOD switch to 4072. 2. Monitor the VCF output with an oscilloscope that can read frequency. 3. Set INITIAL FREQUENCY fader to maximum. 4. Set FINE TUNE fader to center. 5. Set RESONANCE fader to minimum. 6. Set VCO1 fader to maximum, Other VCF input fader to minimum. 7. Adjust 4072 GAIN trimmer for output to Vpp=10V± 0.5V.
RING MOD	RING MOD NEG NULL	Negative Null of Ring Modulator	1. Monitor RING MOD output with an oscilloscope. 2. Set the AUDIO/D.C. switch to D.C. position. 3. Set VCO1 fader to maximum, set VCO2 fader to minimum.

			4. Adjust PEG NULL trimmer for Vpp < 100mV.
	RING MOD POS NULL	Positive Null of Ring Modulator	1. Monitor RING MOD output with an oscilloscope. 2. Set the AUDIO/D.C. switch to AUDIO position. 3. Keep VCO1 fader and VCO2 fader not change. 4. Adjust POS NULL trimmer for Vpp < 100mV.
	RING MOD GAIN	Gain of the Ring Modulator	1. Monitor RING MOD output with an oscilloscope. 2. Set the AUDIO/D.C. switch to D.C. position. 3. Set VCO1 INITIAL OSCILLATOR FREQUENCY fader to 1/4 position and VCO2 INITIAL OSCILLATOR FREQUENCY fader to 3/4 position. 4. Set VCO1 and VCO2 fader to maximum. 5. Adjust GAIN trimmer for Vpp = 20V± 0.5V.
VCA	VCA CONTROL REJ	VCA Control Rejection	1. Monitor the VCA output with an oscilloscope. 2. Set the INITIAL GAIN fader to minimum. 3. Set the VCF , RING MOD and ADSR fader to minimum, set the AR fader to maximum. 4. Set the LFO SPEED fader to 1/4 position, VIB DELAY and VIB DEPTH to minimum. 5. Using 3.5mm mono cable connect the LFO DELAYED Jack and VCA AR Jack. 6. Adjust CONTROL REJ for minimum output offset. 7. Remove patch cable.
	VCA LINEAR GAIN	VCA Linear Gain	1. Monitor the VCA output with an oscilloscope 2. Using 3.5mm mono cable connect VCO2 SAW OUTPUTS Jack and VCA “VCF AUDIO VCF” Jack. 3. Set the VCA INITIAL GAIN, RING MOD and ADSR fader to minimum, set the VCF, AR fader to maximum. 4. Depress and hold the MUNUAL button then adjust LINEAR GAIN trimmer for output Vpp = 10V ± 0.5V.
	VCA EXPONENTIAL GAIN	VCA Exponential Gain	1. Monitor the VCA output with an oscilloscope 2. Using 3.5mm mono cable connect VCO2 SAW OUTPUTS Jack and VCA “VCF AUDIO VCF” Jack. 3. Set the ADSR TIME TACTOR switch to x0.5, set ATTACK TIME and RELEASE TIME fader to minimum, set the DECAY TIME and SUS LEVEL to maximum.

			4. Set the VCA INITIAL GAIN, RING MOD and AR fader to minimum, set the VCF, ADSR fader to maximum. 5. Depress and hold the MUNUAL button then adjust EXPONENTIAL GAIN trimmer for output Vpp = 10V± 0.5V.
S&H	S&H PULSE WIDTH TRIM	S&H Clock Pulse Width	1. Monitor the INT CLK OUT with an oscilloscope. 2. Put SAMPLE&HOLD RATE fader to maximum. 3. Adjust PULSE WIDTH TRIM for 50% duty cycle.