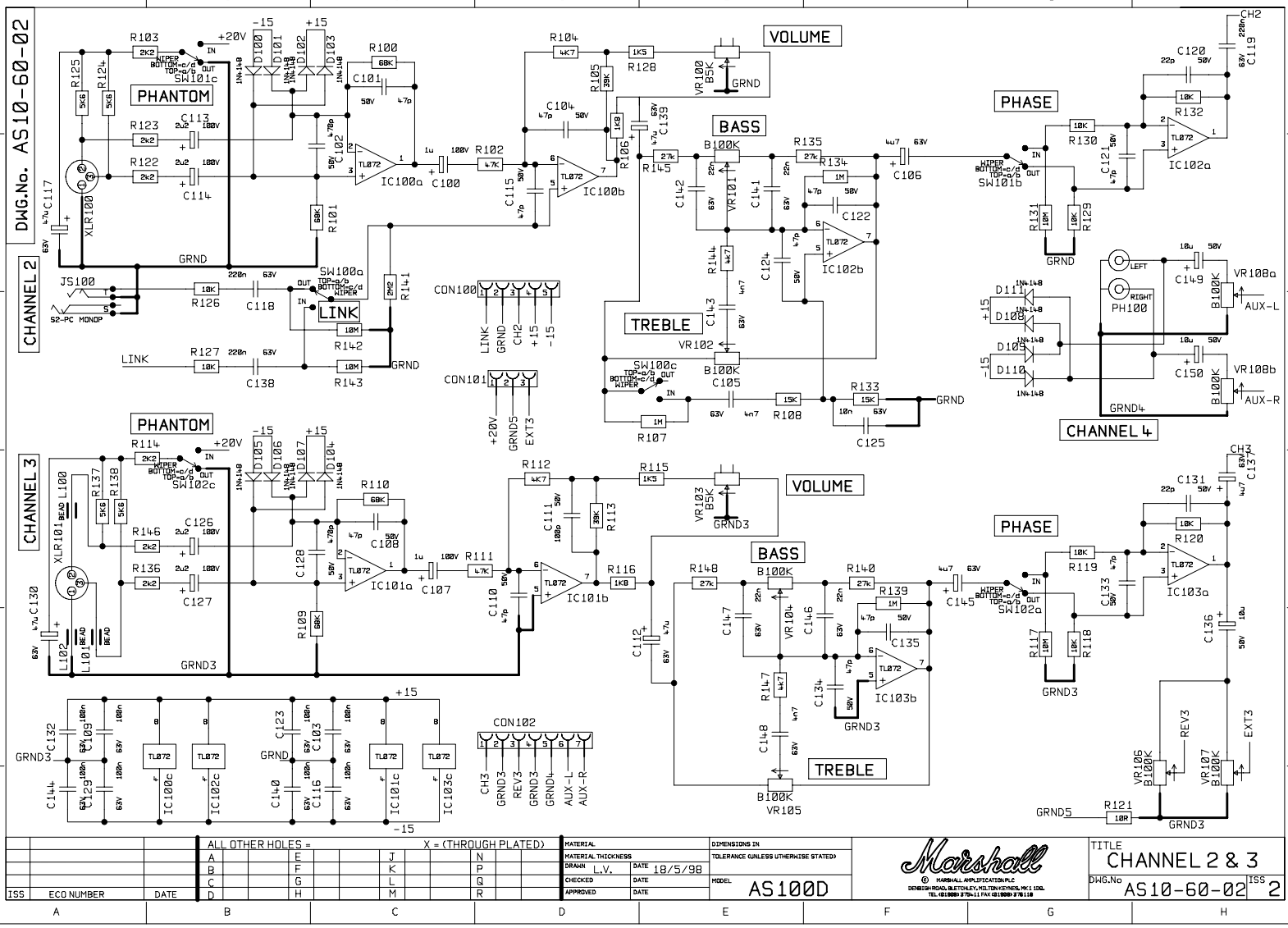
DWG.No. AS10-60-02
CHANNEL 2
CHANNEL 3
CHANNEL 4
PHANTOM
VOLUME
BASS
TREBLE
PHASE
LINK
IC100a
IC100b
IC102a
IC102b
IC101a
IC101b
IC103a
IC103b
IC100c
IC102c
IC101c
IC103c
CON100
CON101
CON102
PH100
LEFT
RIGHT
AUX-L
AUX-R
GRND
GRND3
GRND4
GRND5
+20V
+15
-15
ALL OTHER HOLES =
X = (THROUGH PLATED)
MATERIAL
MATERIAL THICKNESS
DRAWN L.V.
DATE 18/5/98
CHECKED
APPROVED
DIMENSIONS IN
TOLERANCE (UNLESS UTHERWISE STATED)
MODEL AS100D
Marshall
© MARSHALL AMPLIFICATION PLC
DENBIGH ROAD, BLETCHLEY, MILTON KEYNES, MK1 1DQ.
TEL (01908) 375411 FAX (01908) 376118
TITLE CHANNEL 2 & 3
DWG.No AS10-60-02
ISS 2
ISS
ECO NUMBER
DATE