ARIES SYSTEM 300 MUSIC SYNTHESIZER

AR-310 CASE ASSEMBLY INSTRUCTIONS

REFER TO ASSEMBLY INSTRUCTIONS

( ) 1. Mount the four wooden cabinet pieces together.Use a good wood glue, preferably, although you may use screws or nails if you don't mind them showing. IMPORTANT! It is necessary to insure that the corners are square while the glue is drying.This may be done with a corner clamp, or any carpenter's square, etc. Notice that the backs of all four pieces have a 3/16" recessed notch along the edge, for the cabinet back to fit in.If using glue, allow to dry overnight !

( ) 2. Assemble the 10 connectors to the 2 square aluminum bars, using machine screws provided.Be sure that:
a) The female sides of connectors point away from the bars (as shown in drawing)
b) The letter "A" on each connector is in the same direction. The bar nearest the "A"'s will be the upper one.Tighten screws snugly enough to hold assembly together, but not too tightly to allow some movement of the bars.
c) The space at the right end (from front view) has no connector.

( ) 3. Fasten one bracket to each end of each bar, as shown, using a machine screw and nut.

( ) 4. Locate two points on the inside of each cabinet side, near the back. Both points are 7/8" away from the recessed edge. One point is 1 &/16" below the inside cabinet top, and the other is 4" below the first (5 7/16" total from top). Mark with pencil, and indent slightly with nail, punch, etc.

( ) 5. Slide the connector and bar assembly in as shown, and fasten with four wood screws to the points marked in step four.

( ) 6. There are two "L" shaped module mounting strips. The lower one has single holes; the upper one has double holes. Mount the lower one to the cabinet bottom with 3 wood screws. Make sure the front of this strip is 5/8" behind the cabinet front.

( ) 7. Mount the upper strip to the cabinet top, using 3 wood screws. This is also 5/8" in from the cabinet front.

( ) 8. If you have an Aries Synthesizer module already, or when you get one, check that it fits properly. Some slight re-positioning of the bars or mounting strips may be required.

( ) 9. The back panel may be screwed on if desired, after the synthesizer is wired up.

PARTS LIST * AR-310 * CASE AND BACK PLANE CONNECTORS

QUANTITY	DESCRIPTION
1	Top, Wood
1	Bottom, Wood
2	End, Wood
1	Back, Masonite
10	22 Pin Connector
24	4-40 x 5/8" Screw
2	Connector Bar 1/2" square
1	Top Front Mounting Strip
1	Bottom Front Mounting Strip
4	1/2" x 1/2" Mounting Brackets
4	4-40 Hex Nut
14	#4 x 1/2" Wood Screw
33	4-40 x 3/16" Screw

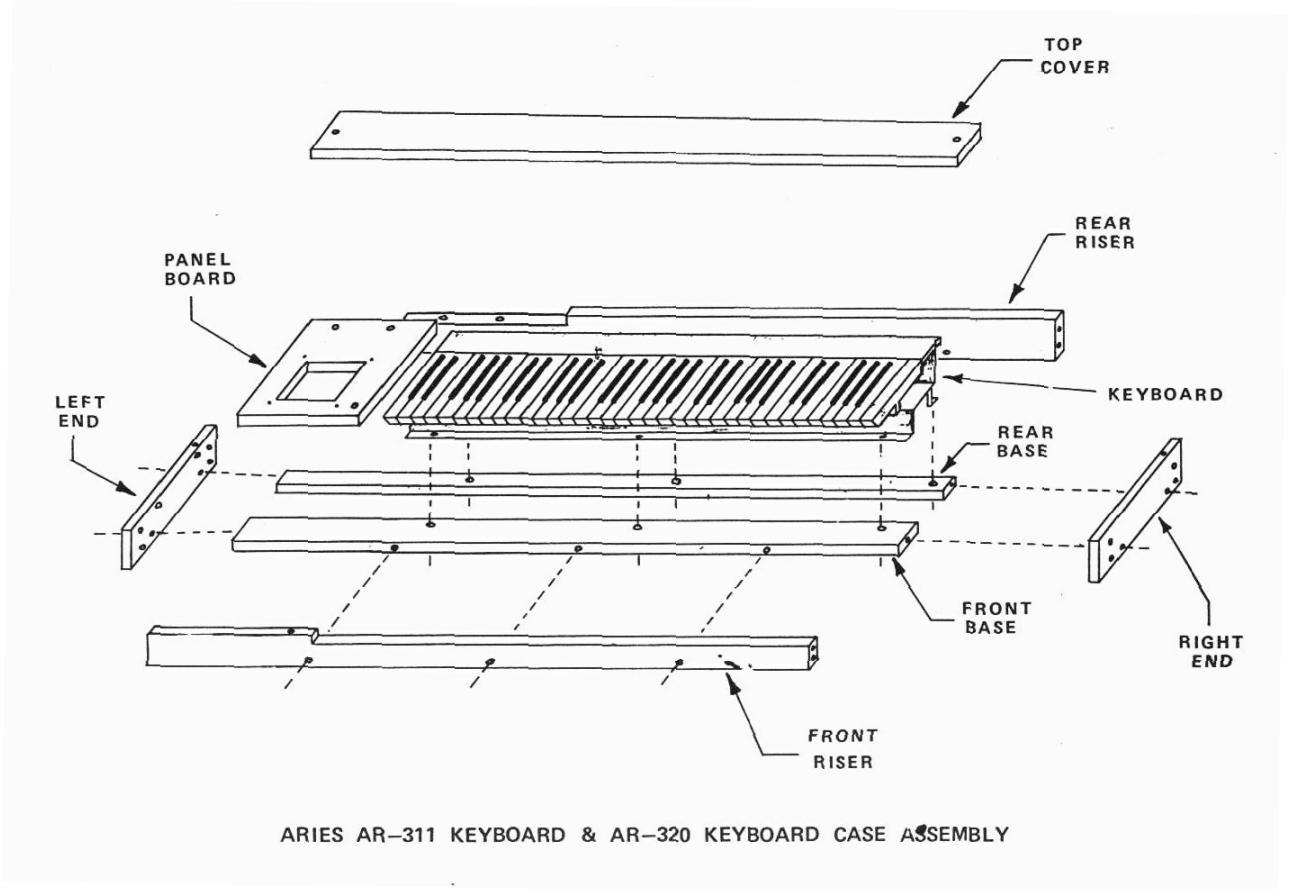

ARIES AR-311 KEYBOARD & AR-320 KEYBOARD CASE ASSEMBLY

AR-320 Keyboard Cabinet Assembly

Refer to Cabinet Assembly Drawing (exploded view)

( ) Attach end pieces (A & B) to rear riser (C). Backs of A & B should be flush with back of rear riser.
NOTE: Rear riser has 5 pre-drilled holes and one rolled rear edge.

( ) Screw rear mount (D), recesses down to end pieces, then to rear riser.

( ) Place front mount approximately in place.

( ) Center keyboard over rear mounting holes. Attach with mount screws. Do same with front mount, then screw front mount securely to end pieces, trying to keep square with end pieces.

( ) Screw front riser to front mount then to end pieces.

( ) Screw rear of interface panel to rear riser. Fasten front of interface to front riser.

( ) Attach top only if keyboard has been wired.

NOTE: Pilot holes should be drilled to facilitate assembly.

NOTE: NO allowance has been provided for heavy upholstery material. Allow for same during construction by moving front and rear risers outward enough to provide clearance for material used. (Not recommended)

KEYBOARD CASE IS NOW READY TO BE FINISHED AS DESIRED.

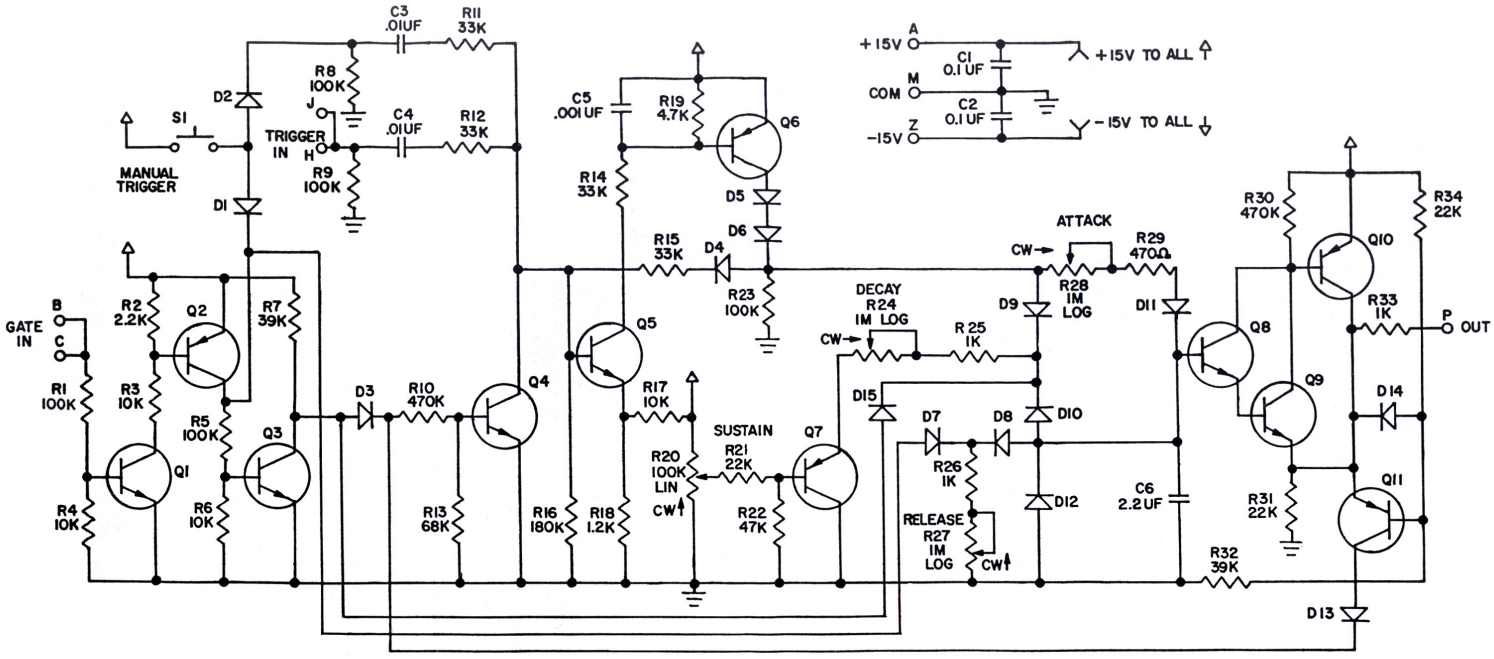

NOTE:
ALL DIODES ARE IN4148.
ALL NPN TRANSISTORS ARE 2N3393.
ALL PNP TRANSISTORS ARE 2N3638.

HIGHEST REFERENCE DESIGNATION:
C6 Q11 S1
D5 R34

AR-312
ENVELOPE GENERATOR (ADSR)

THEORY OF OPERATION OF AR-313 * * * KEYBOARD INTERFACE
(WITH AR-311 KEYBOARD)

The AR-311 keyboard has a string of 60 precision 10 ohm resistors in series, forming a voltage divider. One end is grounded, the other end fed by a constant-current source, consisting of Q1 and R124, biased by R122, R123, D62, and adjusted by P1. One set of key contacts connects a different tap on the voltage divider to the bus called "KBD,VOICE". The lowest key connects to the grounded end, and the highest key to the other end, of the divider. When one key is depressed, the "VOICE" bus will have a voltage proportional to the number of keys up from ground. The current source is adjusted for 1/12 volt per key, or 1 volt per octave. When two or more keys are depressed simultaneously, the "VOICE" bus voltage depends only on the position of the LOWEST key, since the current through the resistors between the lowest key and ground is constant. However, the voltage at the top of the divider (connection called "KBD HIGH") will drop by 1 volt for each octave interval between the lowest and highest keys depressed simultaneously. When only one key is depressed there is no change in this voltage from no keys depressed. This voltage will be 5 volts (1 volt per octave times five octaves).

In addition, there is a second set of contacts, called "Keyboard Gate Switches". Each note has a capacitor (C1 thru C61), resistor (R61 thru R121) and diode (D1 thru D61). The capacitors are normally charged to +15 volts. When a note is depressed, the capacitor discharges partially through the diode into the resistors R132 and R133, causing the voltage at the output bus to momentarily reach about +14 v. The capacitor will discharge until the 1M resistor supplies enough current to equal that lost through R132, at which time the bus voltage will be 2.4 volts. It will remain at this voltage as long as the key is held down.

Now, when any one key is depressed, there are 4 signal paths affected:
A. The voltage at pin 3 of op amp U3 will reach 7 volts, then remain at 1.2 volts, due to the divider R132 and 133. (C66 filters out any contact bounce noise.) U3 acts as a comparator, since it is open-loop. The voltage on pin 2 is biased by R134 and R135 to +0.7 volts. Therefore, the output will normally be -15 volts, but will jump to +12 volts (saturation voltages of U3) when a key is depressed. This turns on FET switch Q2, which charges up holding capacitor C64 to the voltage on the "KBD. VOICE" bus, which is buffered by voltage follower U9. This same positive output from U3 is inverted by U4A (1/4 of a quad 2- input NOR gate), which goes to logic "0" level (near 0v). U4B will have a similar "low"output unless <u>both</u> inputs (pins 12 and 13) are low.

B. Capacitor C75 couples a momentary pulse (0.8ms) of about +14 volts into Darlington emitter follower Q4, which couples the pulse into pin 3 of U6. U6 is a"one shot" whose output (pin 8) first goes "high" (near +5 volts) when turned on by the pulse at pin 3. After a delay of 7ms (determined by C69), the output goes"low" again. Meanwhile, when the output first goes high, U4B now has one input low and one high, so its output stays low. Therefore, the output of op-amp comparator U5 stays low (-15 volts.) This keeps pin 1 of U6 low, which enables Pin 3 input to work.

However, after the delay of 7 ms, pin 8 of U6 goes low again. Assuming the key is still down, this means both inputs of U4B are low, so its output (pin 11) goes high.This turns on U5 (+12 volts) which causes a gate (+10 v) to appear at the GATE OUTPUT. Notice that the gate is delayed, to give the sample hold (Q2 and C64) a chance to acquire the correct keyboard voice (control voltage) before the gate turns on.

C. The third signal path is through U4C, which inverts the 0.8ms pulse through C75. The resulting negative pulse (actually from +5v to around **0V**) is coupled through emitter follower Q5 to pin 2 of U7.

Now, before depressing the key, pins 3 and 1 of U7 were low, and pin 2 was high. When the key is depressed, the rising gate at U5 output turns on the output of U7 (pin 8) for a time of 1.6ms, determined by C71, after which it goes low again. This pulse is amplified by op amp comparator U8 to produce an output trigger pulse of +10 volts and 1.6ms duration, simultaneous with the start of the gate output. 10 microseconds after the start of the gate and trigger, however, C70 charges enough to turn on pin 1 of U7. This inhibits the input at pin 3 from keeping the output of U7 on.

Incidentally, the connection of U5's output to pin 1 of U6 prevents additional pulses due to the depression of more than one key from turning on U6, which would cause a momentary "notch" in the gate output

Now back to U7. Although the positive input at pin 1 inhibits pin 3 from holding U7 high, pin 2 is still free to act. When one or more keys are held down, any additional key will still generate a pulse through C75. The resulting negative pulse at pin 2 of U7 will cause it to generate a trigger pulse.

D. The fourth signal path in from the "KBD VOICE" bus.As already mentioned, Q2 turns on as soon as a key is depressed, charging C64 to the right control voltage. When the key is released, Q2 is open, and the high impedance follower consisting of Q3 and U10 buffers the voltage on C64, without discharging it. This circuit, then "remembers" the keyboard bus voltage.

Now, U10 and follower U11 comprise a feedback circuit to give two types of variable lag (Portamento) to changes in the input.

With S2 in the linear mode,a positive change in voltage across C64 will immediately cause U10's output to go fully positive, since it is open loop. Then, C79 will charge through the counter-clockwise section of P3, the Portamento part.It will charge exponentially toward about 12 volts, but as it nears the new input voltage, feedback from U11 will, after a time, neutralize the input of U10.Since the total change of voltage across C79 is small compared to the initial charging voltage of 12v, the rate of change in output voltage is nearly linear.

On the other hand, putting S2 in the "normal" position adds negative feedback around U10, preventing it from saturating. This causes C79 to charge exponentially, except for large keyboard intervals, when some saturation does occur at first. Thus, the "normal" position is a compromise between exponential and linear portamento.

The output of U11 is coupled into U12, which is a differential amplifier. U11's output appears at U12's output noninverted , with unity gain. Thus, the VOICE OUTPUTS are 1 volt per octave.

The tuning pot, P4, provides a variable voltage from +15v to -15v.(0 volts in the center). However, there is a range near the center where the voltage, after being divided by R165 and R166, is less than the forward drop of D69 and D70, so virtually no voltage appears across R164 and R163. When this range is exceeded, however, the resulting positive or negative voltage gets inverted and summed into the VOICE output, detuning the note flat or sharp, respectively. The "dead space" in the middle of P4's rotation provides a quick return to original tuning (for example, concert pitch, where A=440 Hz.)

There is one additional signal patch when more than one key is depressed simultaneously. This lowers the"KBD High" voltage from its normal 5 volts value. The voltage is buffered by U1, and inverted by U2, R154 compensat for the normal 5 volt level so the AUX VOICE output is normally near 0 volts. The AUX VOICE INTERVAL trim, P2, adjusts the gain for 1 volt change in the AUX VOICE output, per one octave interval between the lowest and highest keys depressed.When summed with the regular VOICE output, by plugging both into the same VCO, the VCO will respond to the highest note played. Together with another VCO only connected to a VOICE output, two notes can be played together.

ARIES SYSTEM 300 Music Synthesizer
ARIES MODULE 313
AR-313 KEYBOARD INTERFACE ASSEMBLY INSTRUCTIONS

The General Assembly Instructions were written as a general guide, to familiarize the builder with the components. Here, now, are the specific assembly instructions for building your Keyboard Interface. It is recommended that you do the following before you proceed:

Find a place where you can work through completion,, without disturbing your set-up.

Use adequate lighting.

Wash your hands before starting. This removes contaminating oils and perspiration, and makes assembly more comfortable.

As you proceed, check off each step with a pencil.

IMPORTANT! THE AR-313 INTERFACE CONSISTS OF TWO PRINTED CIRCUIT BOARDS ("A" AND "B") AND ONE FRONT PANEL CONTROL UNIT. IT IS DESIGNED TO WORK WITH THE AR-311 KEYBOARD, AND MOUNT IN THE AR-300 KEYBOARD CASE.

I. Board "A" Assembly

( ) 1. PREPARATION Lay the circuit board on a sheet of white paper. PLACE METAL FOIL SIDE DOWN! Also, turn board so that connector strip is to the LEFT. Use adequate lighting.

Lay the assembly drawing(layout) down near the board.

Unpack the parts carefully and place in a large box or tray so they won't get lost.

Have the following tools nearby;
- Pencil tip soldering iron, hot and tinned(solder-coated)
- Solder-Use only thin, rosin-core solder !
- Small, diagonal wire cutters
- Small wire stripper
- Small long-nose pliers

( ) 2. JUMPERS Find jumper wire J1 on the drawing. Cut off a piece of insulated, solid wire, ONE INCH LONGER THAN J1. Strip 1/2 inch of insulation from each end (being careful not to damage the wire itself). Bend the bare ends to a right angle and insert into the holes on the board, according to the drawing. While holding the ends down against the board, bend them at a 45 degree angle on the foil side of the board, to hold the wire in place. Solder and cut off the excess. (Refer to introduction on parts installation.)

Install J2 through J5 in the same way.

( ) 3. RESISTORS Carefully install all 47 resistors (R122 through R168) on the circuit board. To avoid breaking the resistor leads, bend the leads at least 1/16th of an inch away from the body of the resistor.
For example:

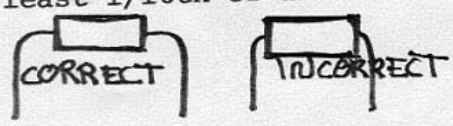

NOTE: a) Resistors R1 through R60 are on the keyboard.
b) Resistors R61 through R121 are on board "B"
c) Resistor R154 mounts with one lead bent underneath, as shown on the layout.
d) NOTE: R168 must be mounted as shown, with a piece of insulated wire soldered to one end.

( ) 4. CAPACITORS Install all 24 capacitors (C62 through C85). observe polarity where shown.NOTE: C79 is actually much larger that shown on the drawing. Bend the leads like this.

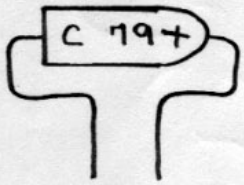

Install, being careful not to let its leads touch any other wires.

( ) 5. DIODES Install all 8 diodes(D62 through D70), observing polarity. (There is no D64).

( ) 6. INTEGRATED CIRCUITS Install all 12 I C's (U1 through U12). OBSERVE ORIENTATION!

( ) 7. TRANSISTORS Install all 5 transistors (Q1 through Q5).

THIS COMPLETES ASSEMBLY OF BOARD "A"

II NOW, WIRE BOARD "B"
( ) 1. Install all 61 resistors(R61 through R121).

( ) 2. Install all 61 capacitors (C1 through C61).

( ) 3. Install all 61 diodes (D1 through D61). NOTE: Observe polarity on capacitors and diodes.Don't forget R121, C61, and D61 on the right-hand edge!

THIS COMPLETES ASSEMBLY OF BOARD "B".

III PANEL WIRING
PLEASE REFER TO PANEL WIRING DIAGRAM.

( ) 1. Mount the 14 mini-phone jacks in THE EXACT POSITION SHOWN.Tighten all nuts.

( ) 2. Mount the two switches (S1 and S2) as shown.

( ) 3. Mount all four pots (P1,P2,P3,P4) as shown.NOTE: Although all four pots are of the locking-nut, screwdriver adjust type, only P1 and P2 will need the locking nut on. P3 and P4 will only be used with knobs.

( ) 4. Mount knobs on P3 and P4.

( ) 5. Solder a wire to the grounds of the four jacks on the left side (rear view) as shown.

( ) 6. Connect the two upper jacks together as shown.

( ) 7. Connect all four jacks in the next row down.

( ) 8. Repeat for the 3rd row.

( ) 9. Repeat for the bottom row.

( )10. Connect pins 1 and 2 of P2 together.

( )11. Connect pin2 of S2 to Pin one of P3.

( )12. Connect pin3 of S1 to pin 2 of P3

IV NOW PROCEED TO WIRE THE PANEL TO BOARD "A".

( ) 1. Cut off 19 pieces of insulated wire, each 11 inches long. Strip 1/2" off each end.

( ) 2. Connect the wires from each point on the panel (shown by the arrow) to the corresponding point on Board "A".TO AVOID MISTAKES, CONNECT BOTH ENDS OF EACH WIRE BEFORE GOING TO THE NEXT WIRE.NOTE:When wiring the ground connection to Board "A", strip an extra 1/2" of insulation (one inch total) from the wire end. Push this wire through the board hole leaving 1/4" of BARE wire on top.
SOLDER:

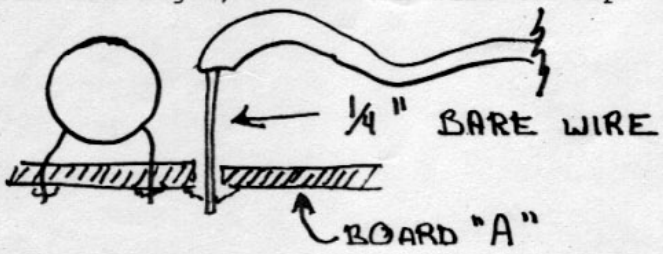

This is to allow two additional wires to connect here.

V NOW WIRE BOARD "A" AND BOARD "B" TOGETHER FOR THE POWER SUPPLY.

( ) 1. Cut a piece of insulated wire 45" long.Strip 1/2" of insulation from each end. Wrap one end around the bare ground wire on Board "A" (from previous step). Solder . Solder the other end in the hole on Board "B" labelled "GROUND" on the drawing.

( ) 2. Cut another 45" piece of insulated wire. Strip one inch of insulation off one end. Push through hole in Board "A" labelled "+15v supply" on drawing, leaving 1/4" bare wire on top, as you did on the ground wire.Solder. Solder the other end to the hole in board "B" labelled "+15 volts".

THIS COMPLETES ASSEMBLY OF YOUR AR-313 KEYBOARD INTERFACE.

ARROW INDICATES A WIRE TO BOARD "A"

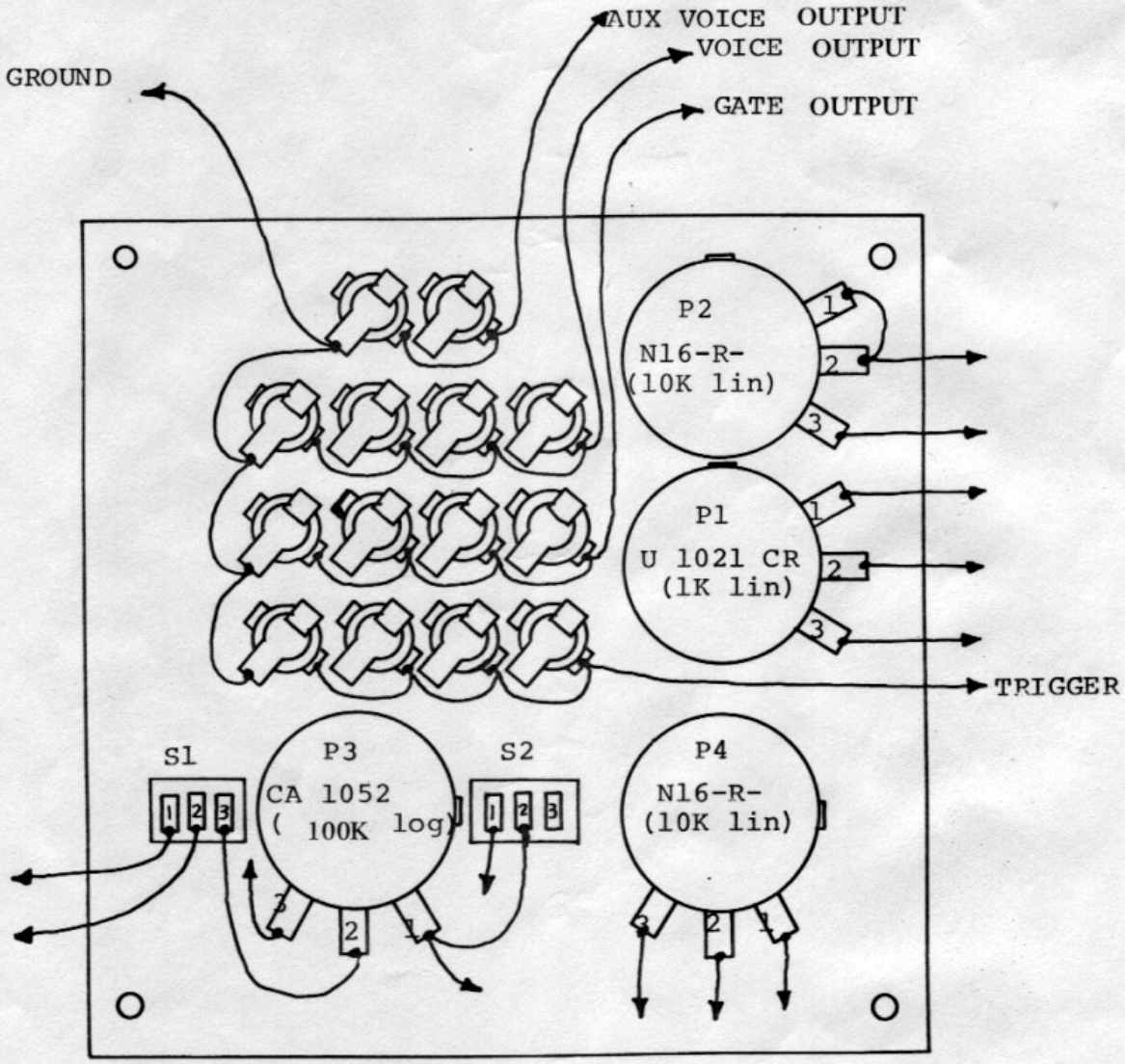

AR-313 KEYBOARD INTERFACE

PANEL WIRING-REAR VIEW

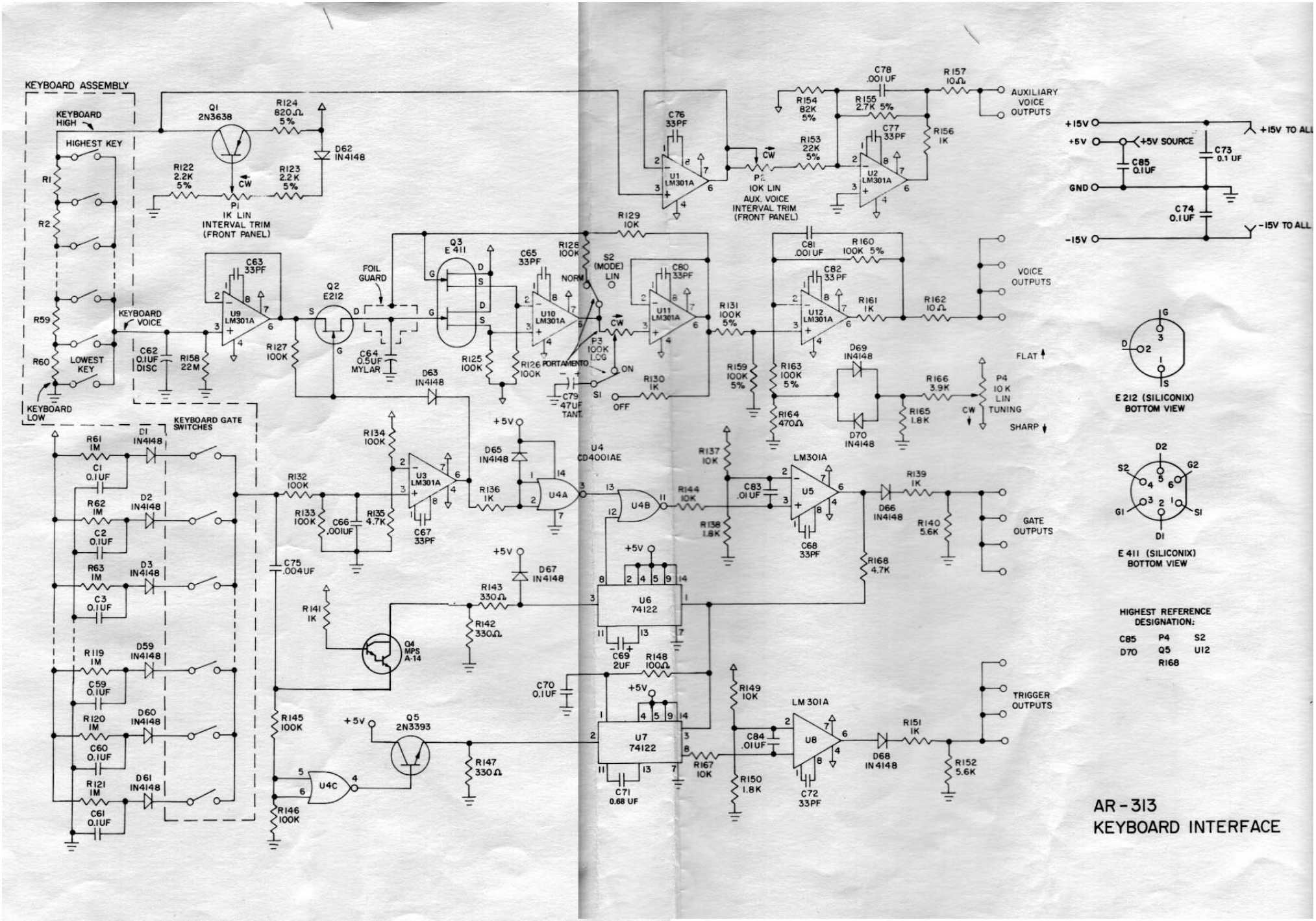
KEYBOARD ASSEMBLY
KEYBOARD HIGH
HIGHEST KEY
KEYBOARD VOICE
LOWEST KEY
KEYBOARD LOW
KEYBOARD GATE SWITCHES
Q1 2N3638
R124 820Ω 5%
D62 IN4148
R122 2.2K 5%
R123 2.2K 5%
P1 1K LIN INTERVAL TRIM (FRONT PANEL)
C63 33PF
C62 0.1UF DISC
R158 22M
U9 LM301A
Q2 E212
FOIL GUARD
C64 0.5UF MYLAR
Q3 E411
D63 IN4148
R127 100K
R125 100K
R126 100K
C65 33PF
U10 LM301A
R128 100K
S2 (MODE) LIN
NORM
PORTAMENTO
P3 100K LOG
ON
OFF
S1
C79 47UF TANT.
R130 1K
R129 10K
C76 33PF
U1 LM301A
C78 .001UF
R157 10Ω
AUXILIARY VOICE OUTPUTS
R154 82K 5%
R155 2.7K 5%
R153 22K 5%
C77 33PF
R156 1K
U2 LM301A
CW
P2 10K LIN AUX. VOICE INTERVAL TRIM (FRONT PANEL)
C81 .001UF
R160 100K 5%
C82 33PF
U12 LM301A
R161 1K
R162 10Ω
VOICE OUTPUTS
C80 33PF
U11 LM301A
R131 100K 5%
R159 100K 5%
R163 100K 5%
R164 470Ω
D69 IN4148
D70 IN4148
R165 1.8K
R166 3.9K
P4 10K LIN TUNING
FLAT
SHARP
+15V
+5V
GND
-15V
+5V SOURCE
C85 0.1UF
C73 0.1 UF
C74 0.1 UF
+15V TO ALL
-15V TO ALL
E 212 (SILICONIX) BOTTOM VIEW
E 411 (SILICONIX) BOTTOM VIEW
D1 IN4148
R61 1M
C1 0.1UF
D2 IN4148
R62 1M
C2 0.1UF
D3 IN4148
R63 1M
C3 0.1UF
D59 IN4148
R119 1M
C59 0.1UF
D60 IN4148
R120 1M
C60 0.1UF
D61 IN4148
R121 1M
C61 0.1UF
R59
R60
R1
R2
R134 100K
U3 LM301A
R132 100K
R133 100K
C66 .001UF
R135 4.7K
C67 33PF
R136 1K
D65 IN4148
U4 CD4001AE
U4A
U4B
U4C
R144 10K
R137 10K
R138 1.8K
C83 .01UF
U5 LM301A
C68 33PF
R139 1K
D66 IN4148
R140 5.6K
R168 4.7K
GATE OUTPUTS
C75 .004UF
R141 1K
Q4 MPS A-14
R143 330Ω
R142 330Ω
D67 IN4148
U6 74122
C69 2UF
R148 100Ω
C70 0.1UF
R145 100K
R146 100K
Q5 2N3393
R147 330Ω
U7 74122
C71 0.68 UF
R149 10K
R150 1.8K
R167 10K
C84 .01UF
U8 LM301A
C72 33PF
R151 1K
D68 IN4148
R152 5.6K
TRIGGER OUTPUTS
HIGHEST REFERENCE DESIGNATION:
C85 P4 S2
D70 Q5 U12
R168
AR-313
KEYBOARD INTERFACE

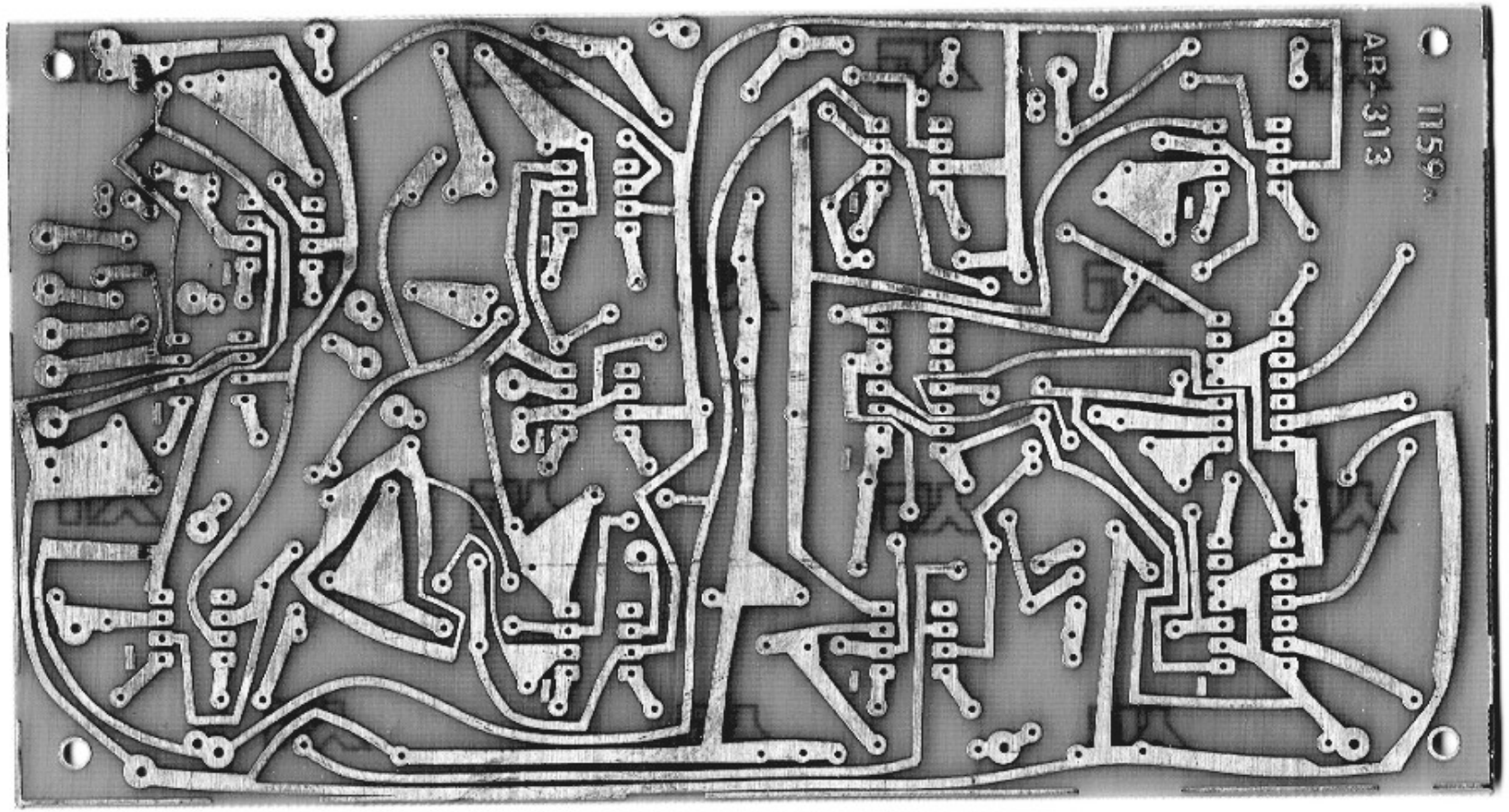
AR-313
1159

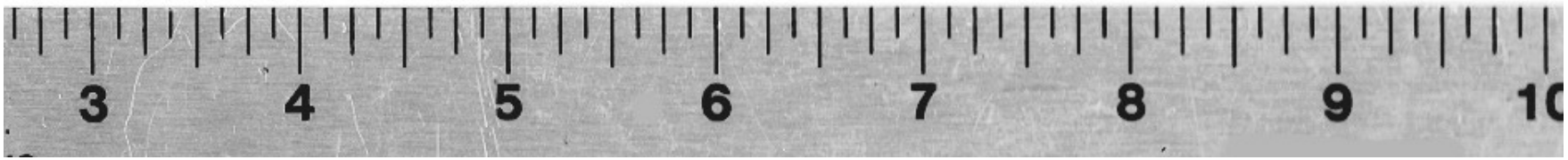
3
4
5
6
7
8
9
10

1163

AR-313 KEYBOARD INTERFACE

TRIM PROCEDURE (WITH ARIES SYNTHESIZER)

VOICE TRIM

1. Connect the keyboard power cable to the synthesizer.Turn on.
2. Connect a patch cord from one voice output just to control #2 on one VCO.
3. Set keyboard tuning to center, and portamento off.
4. Mix the sawtooth outputs of this VCO and another one, with NO control inputs, and listen to them. Set both dials to 250 Hz.
5. While holding down the lowest key (c),carefully tune either VCO for zero beat, that is, the same frequency.
6. Loosen locking nut on VOICE INTERVAL trim pot on keyboard panel (if used).
7. Release the lowest key, and hold down the "C" key two octaves up (the 15th white key).
8. Adjust the VOICE INTERVAL trim so that the VCO's are exactly two octaves apart.
9. Repeat steps 5, 7, and 8 until the VCO's are in unison at the lowest key, and two octaves apart at the 15th white key, without needing further trimming.
10. Tighten the lock nut and check the VCO's again.

AUXILIARY VOICE TRIM

1. Now connect a patch cord from the VOICE output to control input #2 of the second VCO. (Leave the first one connected also).
2. While holding the lowest key down, tune the VCO's exactly in unison.
3. Play different notes, and check that the VCO's stay in unison closely. If not, one of them needs adjustment of its "VOLTS PER OCTAVE " trim.
4. Connect a patch cord from one AUX. VOICE output jack to control input #3 of one VCO.
5. Hold the lowest note down, and tune the VCO's exactly in unison.
6. Loosen the locking nut (if used) on the AUX. VOICE INTERVAL trim pot.
7. Simultaneously hold down the lowest key and the one an octave higher (the 8th white key).
8. Adjust the AUX. VOICE INTERVAL trim so the VCO's are exactly one octave apart.
9. Repeat steps 5, 7, and 8 until the VCO's are in unison with only one key down, and one octave apart with two keys an octave apart held down.

NOTE: THIS TRIM MAY BE DIFFICULT BECAUSE IT ALSO AFFECTS THE TUNING. IF YOU HAVE TROUBLE, THE FOLLOWING WILL HELP.

ADDITIONAL TRIM INSTRUCTION

1. Listen only to the VCO which has the AUX. VOICE connection plus the VOICE connection.
2. Hold down the lowest key, and alternately push and release the next octave (8th white key).
3. Adjust the AUX. VOICE INTERVAL trim so that you hear an octave change when you play and release the octave key. When adjusted, tighten the locking nut and check the intervals again.

PARTS LIST AR-313 * KEYBOARD INTERFACE

PART NUMBERS	QUANTITY	DESCRIPTION	VALUE AND RATINGS
C1 thru C61	61	Capacitor, Electrolytic	0.1 mfd, 25v
C62, ~~70~~, ~~73~~, ~~74~~, ~~85~~ C63, 65, 67, ~~68~~, ~~72~~	5	" Disc	0.1mfd, 50v
~~76~~, ~~77~~, 80, 82	9	" "	33 pf
~~C64~~	1	Capacitor-Mylar, Mica, or Poly.	0.47mfd, 100v, 10%
C69	1	Capacitor, Tantalum	2.2 mfd, 20v
~~C71~~	1	Capacitor, Ceramic	0.68 mfd
~~C75~~	1	Capacitor, Disc	0.004 mfd
C66, ~~78~~, ~~81~~	3	" "	0.001 mfd
~~83~~, ~~84~~	2	" "	0.01 mfd
D1 thru 70 (D64 deleted)	69	Diode, Silicon	1N914, 1N4148
D71	*1*	*Diode, Zener*	*10v - 1 watt*
P1	1	Potentiometer, 1/4" Slotted Shaft	1k linear
P2	1	" "	10k linear
P3	1	Potentiometer, 1/4" shaft	100k log
P4	1	" "	10k linear
~~Q1~~	1	Transistor, PNP	2N3638
~~Q2~~	1	Field Effect Transistor n-channel	E212 (Siliconix)
~~Q3~~	1	Field Effect Transistor, dual n-channel	E411 (Siliconix)
Q4	1	Transistor, NPN, Darlington pair	MPS A-14
Q5	1	Transistor, NPN	2N3393 or TE-3393
~~C79~~	1	Capacitor, Tantalum	47 mfd, 20v
R1 thru 60	60	Resistor, Metal Film	10 ohm, 1% (part of kbrd assembly)
R61 thru 121	61	Resistor, Carbon	1 meg, 10%
R122, 123	2	Resistor, Carbon Film	2.2k, 5%
R ~~124~~	1	" " "	820 ohm, 5%
R~~125~~, ~~126~~, ~~127~~, ~~128~~, ~~132~~, ~~133~~	6	Resistor, Carbon	100k, 10%
R~~134~~, ~~145~~, ~~146~~	3	" "	100k, 10%
R~~129~~, ~~137~~, ~~144~~, ~~149~~, ~~167~~	5	" "	10k, 10%
R~~130~~, ~~136~~, ~~139~~, ~~141~~, ~~151~~, ~~156~~, ~~161~~	7	" "	1k, 10%
R~~131~~, ~~159~~, ~~160~~, ~~163~~	4	Resistor, Carbon Film	100k, 5%
R~~135~~, ~~168~~	2	Resistor, Carbon	4.7k. 10%
R~~138~~, ~~150~~, ~~165~~	3	" "	1.8k, 10%
R~~140~~, ~~152~~	2	" "	5.6k. 10%
R~~142~~, ~~143~~, ~~147~~	3	" "	330 ohm, 10%

PARTS LIST * AR-313 * (cont.)

PART NUMBER	QUANTITY	DESCRIPTION	VALUE AND RATINGS
R148	1	Resistor,Carbon	100ohm, 10%
R153	1	Resistor,Carbon Film	22k,5%
R154	1	" " "	82k,5%
R155	1	" " "	27k,5%
R157,162	2	Resistor,Carbon	10 ohm,10%
R158	1	" "	22 meg,10%
R164	1	Resistor,Carbon	470 ohm,10%
R166	1	" "	3.9k.10%
S1,2	2	Switch,Toggle	SPDT
U1,2,3,5,8,9,10,11,12	9	Operational Amplifier	LM301A
U4	1	Quad Dual Input Nor Gate	CD4001AE
U6,7	2	Monostable Multivibrator	74122
	1	Front Panel	
	2	Knobs,1/4" shaft	
	14	Jacks,Mini-Phone	
	2	Printed Circuit Board	
	4	4-40 Nut	
	4	4-40x5/16" Screw	
	4	1/8" Fiber Spacer	
	4	Flat Bracket	
	12	#4x1/2" Wood Screw	

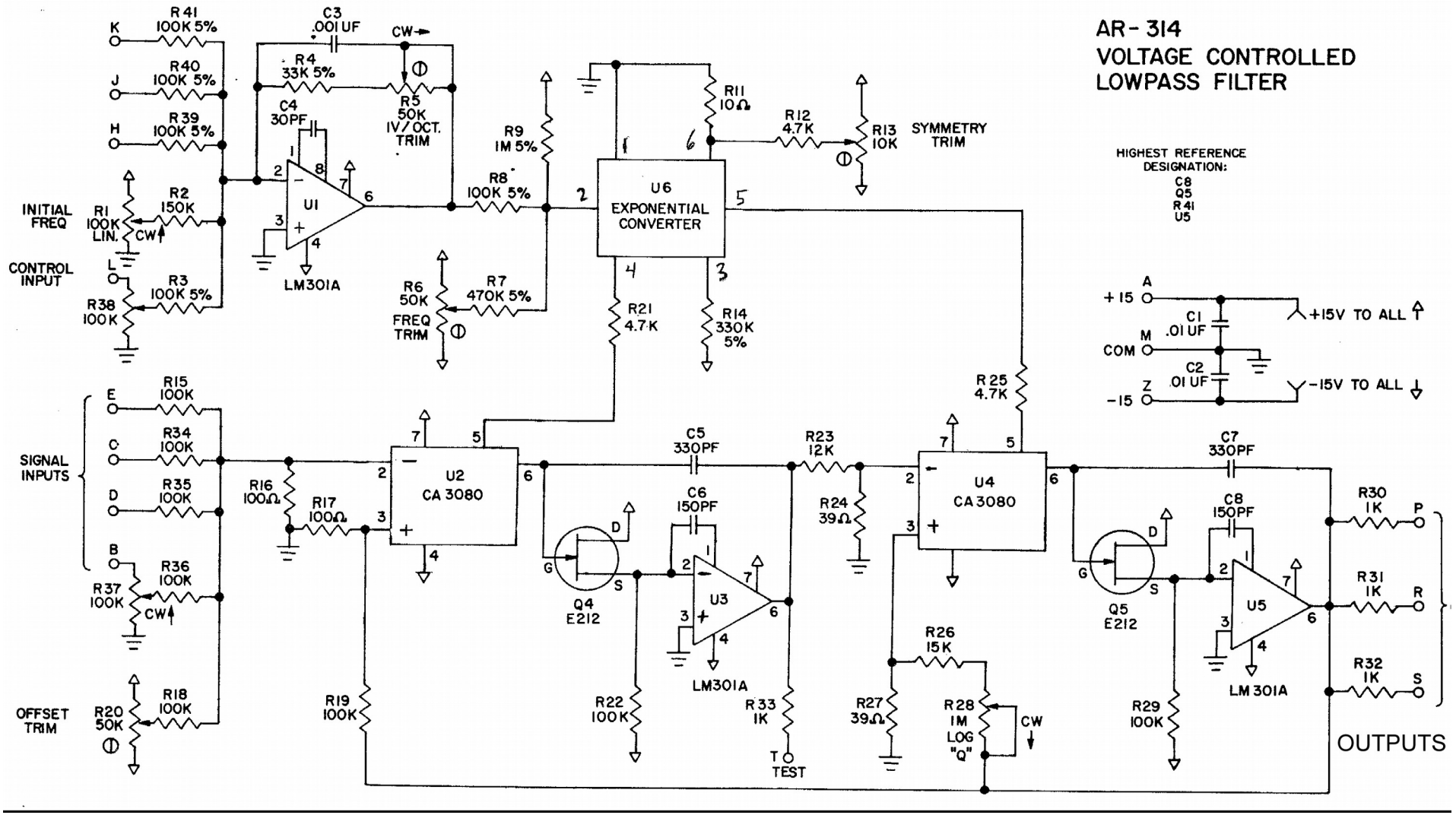
AR-314
VOLTAGE CONTROLLED
LOWPASS FILTER
HIGHEST REFERENCE DESIGNATION:
C8
Q5
R41
U5
INITIAL FREQ
CONTROL INPUT
SIGNAL INPUTS
OFFSET TRIM
SYMMETRY TRIM
FREQ TRIM
TEST
OUTPUTS
+15V TO ALL
-15V TO ALL
+15
COM
-15
U1
LM301A
U2
CA 3080
U3
LM301A
U4
CA 3080
U5
LM 301A
U6
EXPONENTIAL CONVERTER
Q4
E212
Q5
E212
R41 100K 5%
R40 100K 5%
R39 100K 5%
R2 150K
R1 100K LIN.
R3 100K 5%
R38 100K
R15 100K
R34 100K
R35 100K
R36 100K
R37 100K
R18 100K
R20 50K
C3 .001 UF
R4 33K 5%
C4 30PF
R5 50K 1V/OCT. TRIM
R9 1M 5%
R8 100K 5%
R6 50K
R7 470K 5%
R11 10Ω
R12 4.7K
R13 10K
R21 4.7K
R14 330K 5%
R25 4.7K
C5 330PF
C6 150PF
R23 12K
R24 39Ω
C7 330PF
C8 150PF
R16 100Ω
R17 100Ω
R19 100K
R22 100K
R33 1K
R26 15K
R27 39Ω
R28 1M LOG "Q"
R29 100K
R30 1K
R31 1K
R32 1K
C1 .01 UF
C2 .01 UF

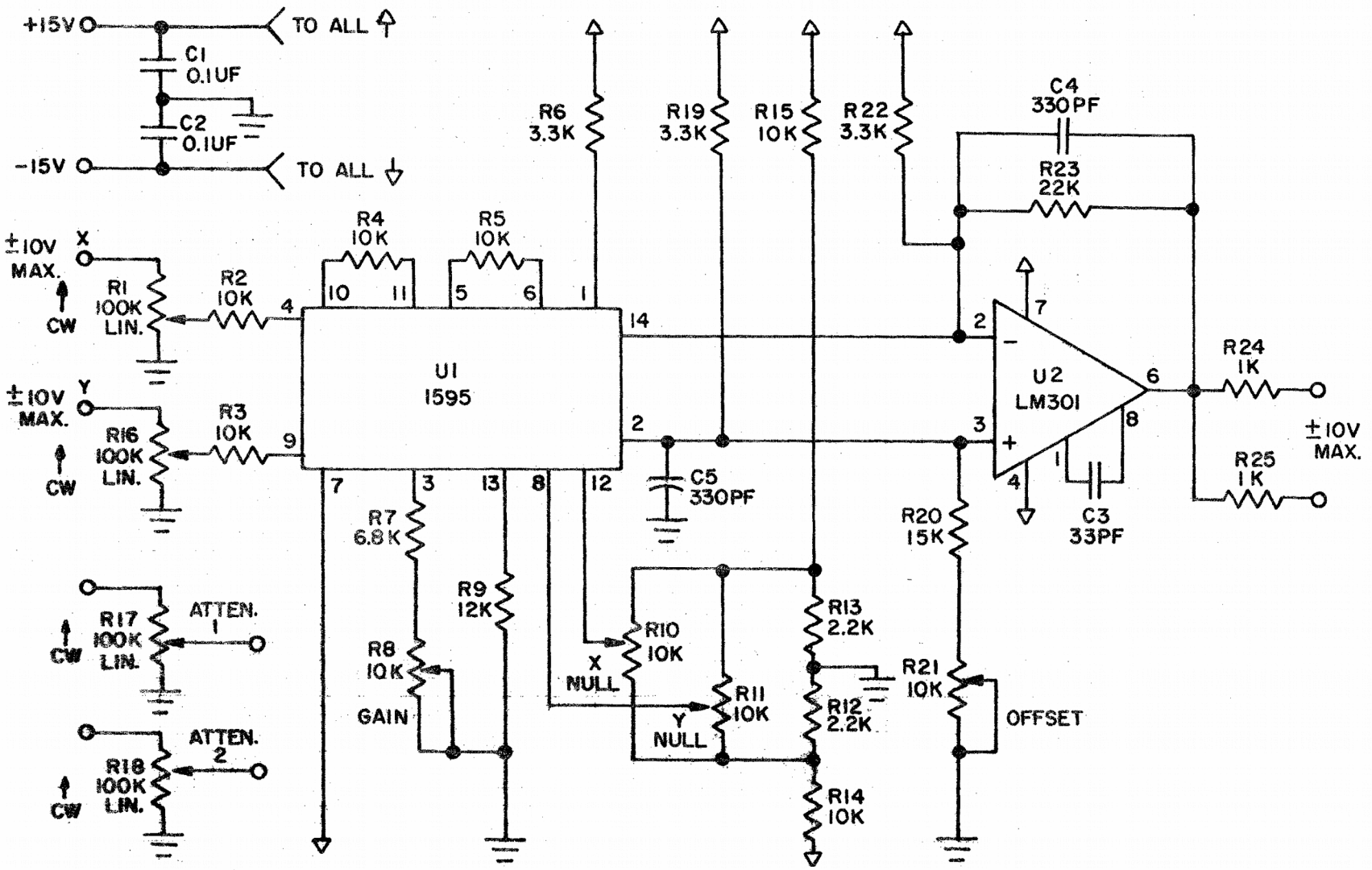

HIGHEST REFERENCE DESIGNATION

J1 R25 C4 U2

AR-315
BALANCED MODULATOR

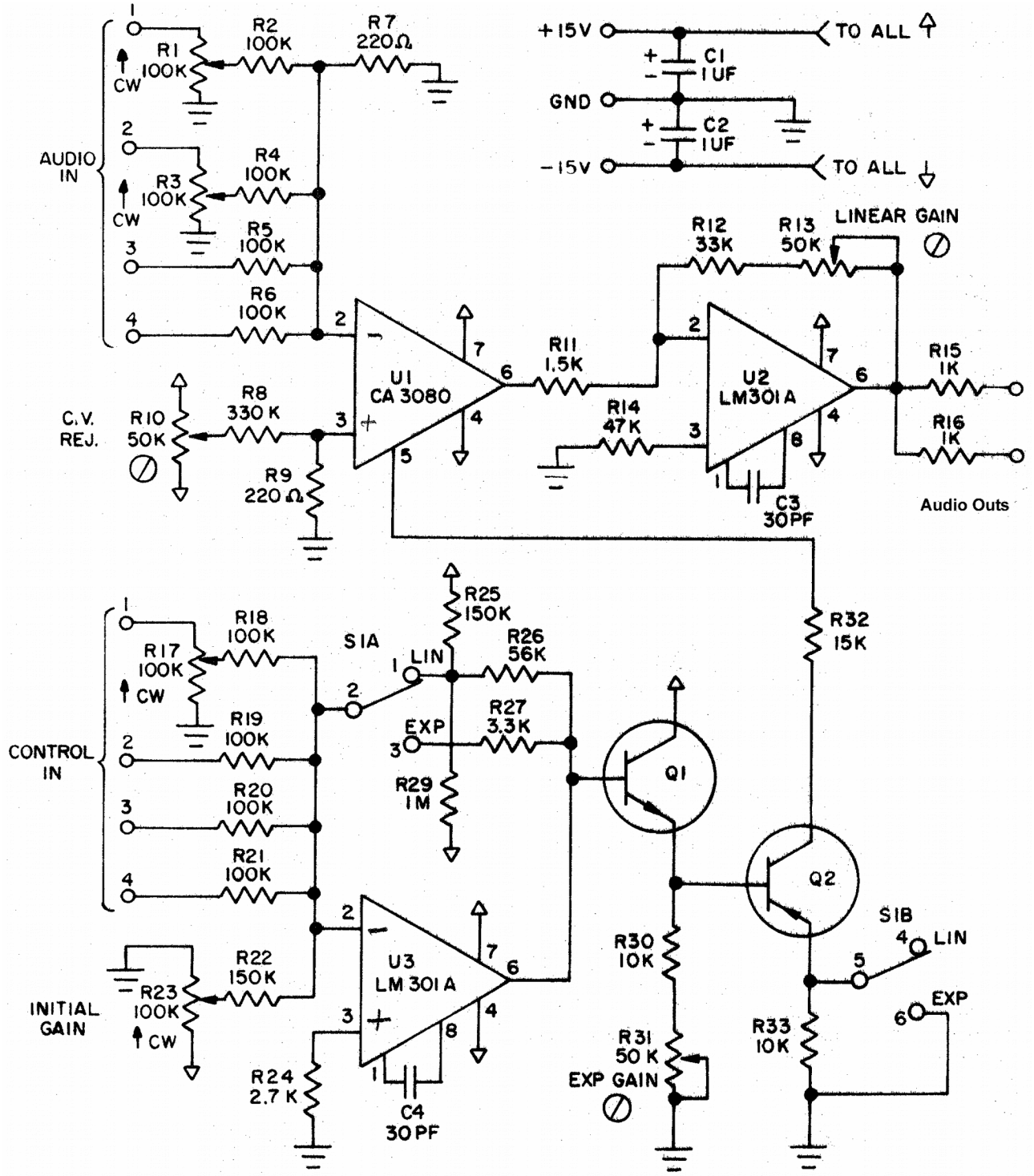

HIGHEST REFERENCE DESIGNATION

C4 Q2 R33 S1 U3

AR-316

VOLTAGE CONTROL AMPLIFIER

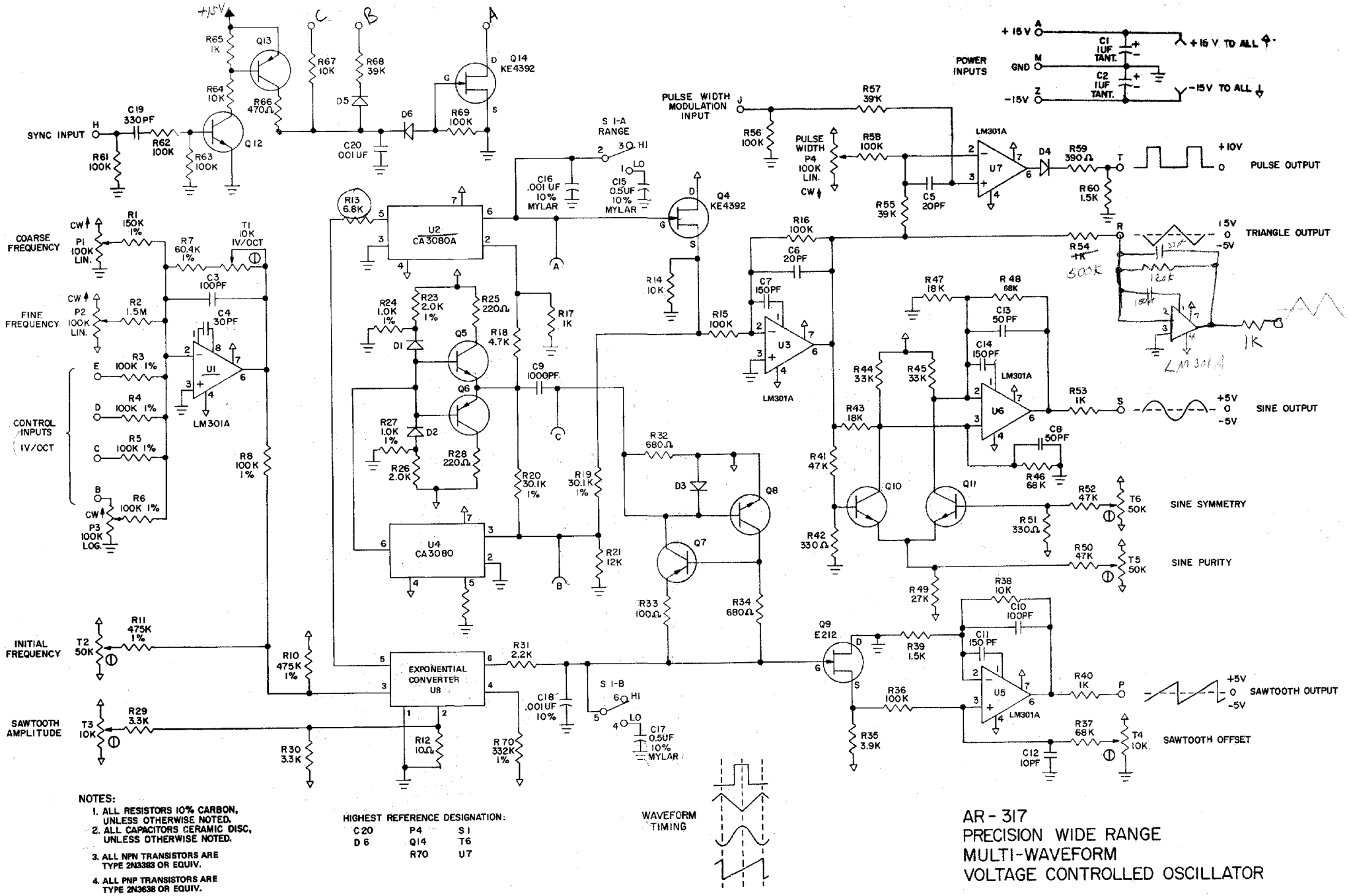

NOTES:

1. ALL RESISTORS 10% CARBON, UNLESS OTHERWISE NOTED.
2. ALL CAPACITORS CERAMIC DISC, UNLESS OTHERWISE NOTED.
3. ALL NPN TRANSISTORS ARE TYPE 2N3393 OR EQUIV.
4. ALL PNP TRANSISTORS ARE TYPE 2N3638 OR EQUIV.

HIGHEST REFERENCE DESIGNATION:

C20	P4	S1
D6	Q14	T6
	R70	U7

WAVEFORM TIMING

AR-317
PRECISION WIDE RANGE MULTI-WAVEFORM VOLTAGE CONTROLLED OSCILLATOR

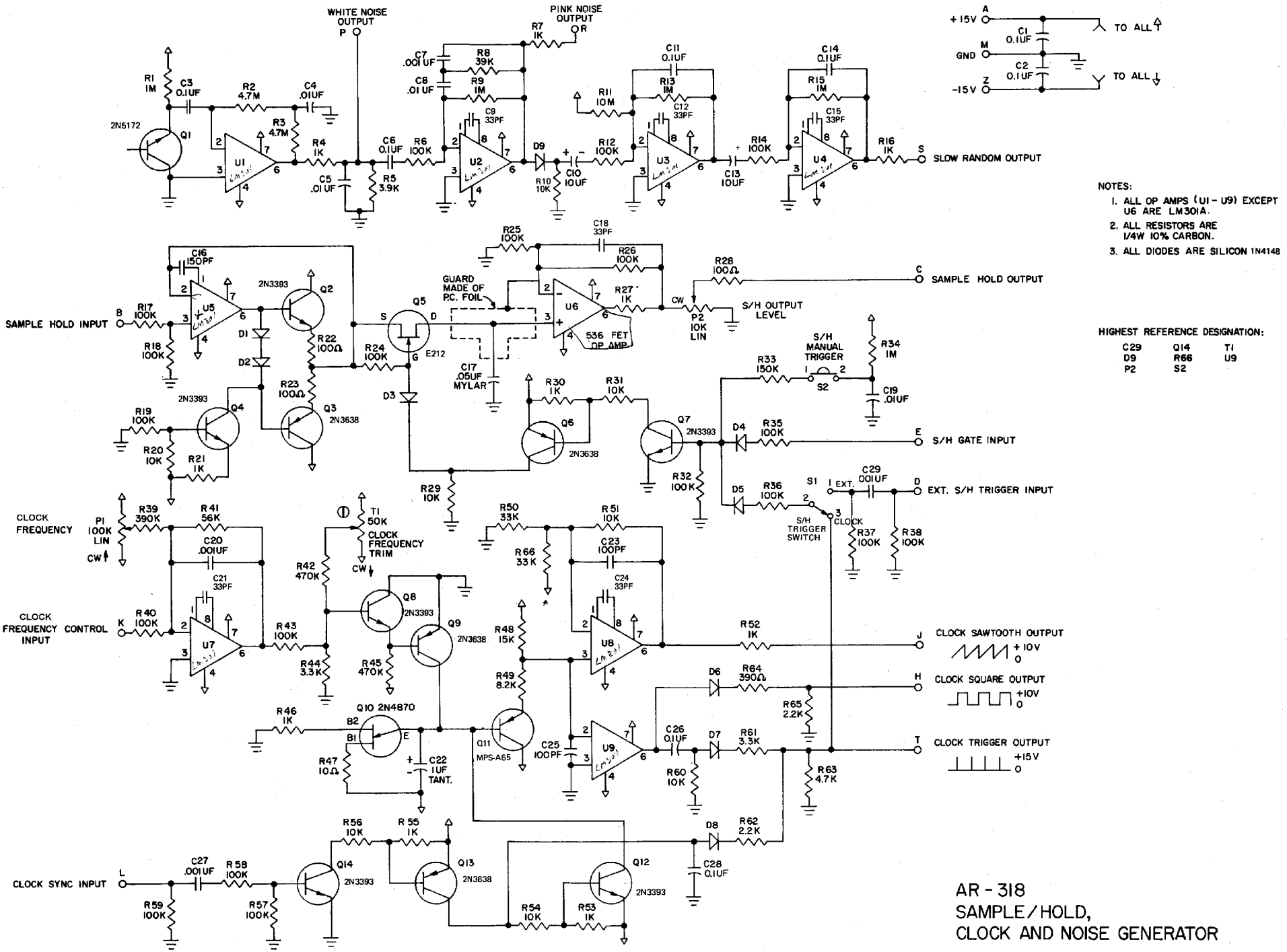
WHITE NOISE OUTPUT
P
PINK NOISE OUTPUT
R
+15V
A
C1 0.1UF
TO ALL
GND
M
C2 0.1UF
-15V
Z
TO ALL
R1 1M
C3 0.1UF
R2 4.7M
C4 .01UF
R3 4.7M
2N5172
Q1
U1
R4 1K
C5 .01UF
R5 3.9K
C6 0.1UF
R6 100K
C7 .001UF
R8 39K
C8 .01UF
R9 1M
R7 1K
C9 33PF
U2
D9
R10 10K
C10 10UF
C11 0.1UF
R11 10M
R13 1M
C12 33PF
U3
C13 10UF
C14 0.1UF
R15 1M
C15 33PF
U4
R14 100K
R16 1K
S
SLOW RANDOM OUTPUT
NOTES:
1. ALL OP AMPS (U1 - U9) EXCEPT U6 ARE LM301A.
2. ALL RESISTORS ARE 1/4W 10% CARBON.
3. ALL DIODES ARE SILICON 1N4148
HIGHEST REFERENCE DESIGNATION:
C29 Q14 T1
D9 R66 U9
P2 S2
SAMPLE HOLD INPUT
B
R17 100K
R18 100K
C16 150PF
U5
2N3393
Q2
D1
D2
R22 100Ω
R23 100Ω
2N3393
Q4
Q3
2N3638
R19 100K
R20 10K
R21 1K
GUARD MADE OF P.C. FOIL
Q5
S
D
G
E212
R24 100K
D3
R25 100K
C18 33PF
R26 100K
U6
536 FET OP AMP
R27 1K
CW
R28 100Ω
P2 10K LIN
S/H OUTPUT LEVEL
C
SAMPLE HOLD OUTPUT
C17 .05UF MYLAR
R30 1K
R31 10K
Q6
2N3638
R29 10K
S/H MANUAL TRIGGER
S2
R33 150K
R34 1M
C19 .01UF
Q7
2N3393
D4
R35 100K
E
S/H GATE INPUT
R32 100K
D5
R36 100K
S1
I EXT.
C29 001UF
D
EXT. S/H TRIGGER INPUT
S/H TRIGGER SWITCH
CLOCK
R37 100K
R38 100K
CLOCK FREQUENCY
P1 100K LIN
CW
R39 390K
R41 56K
C20 .001UF
T1 50K
CLOCK FREQUENCY TRIM
CW
R42 470K
R50 33K
R51 10K
R66 33 K
C23 100PF
C24 33PF
CLOCK FREQUENCY CONTROL INPUT
K
R40 100K
C21 33PF
U7
R43 100K
R44 3.3K
R45 470K
Q8
2N3393
Q9
2N3638
R48 15K
R49 8.2K
U8
R52 1K
J
CLOCK SAWTOOTH OUTPUT
+10V
0
D6
R64 390Ω
H
CLOCK SQUARE OUTPUT
+10V
0
R65 2.2K
R46 1K
Q10 2N4870
B2
B1
E
Q11
MPS-A65
R47 10Ω
C22 1UF TANT.
C25 100PF
U9
C26 0.1UF
D7
R61 3.3K
T
CLOCK TRIGGER OUTPUT
+15V
0
R60 10K
R63 4.7K
R56 10K
R55 1K
D8
R62 2.2K
C28 0.1UF
CLOCK SYNC INPUT
L
C27 .001UF
R58 100K
Q14
2N3393
Q13
2N3638
Q12
2N3393
R59 100K
R57 100K
R54 10K
R53 1K
AR - 318
SAMPLE/HOLD,
CLOCK AND NOISE GENERATOR

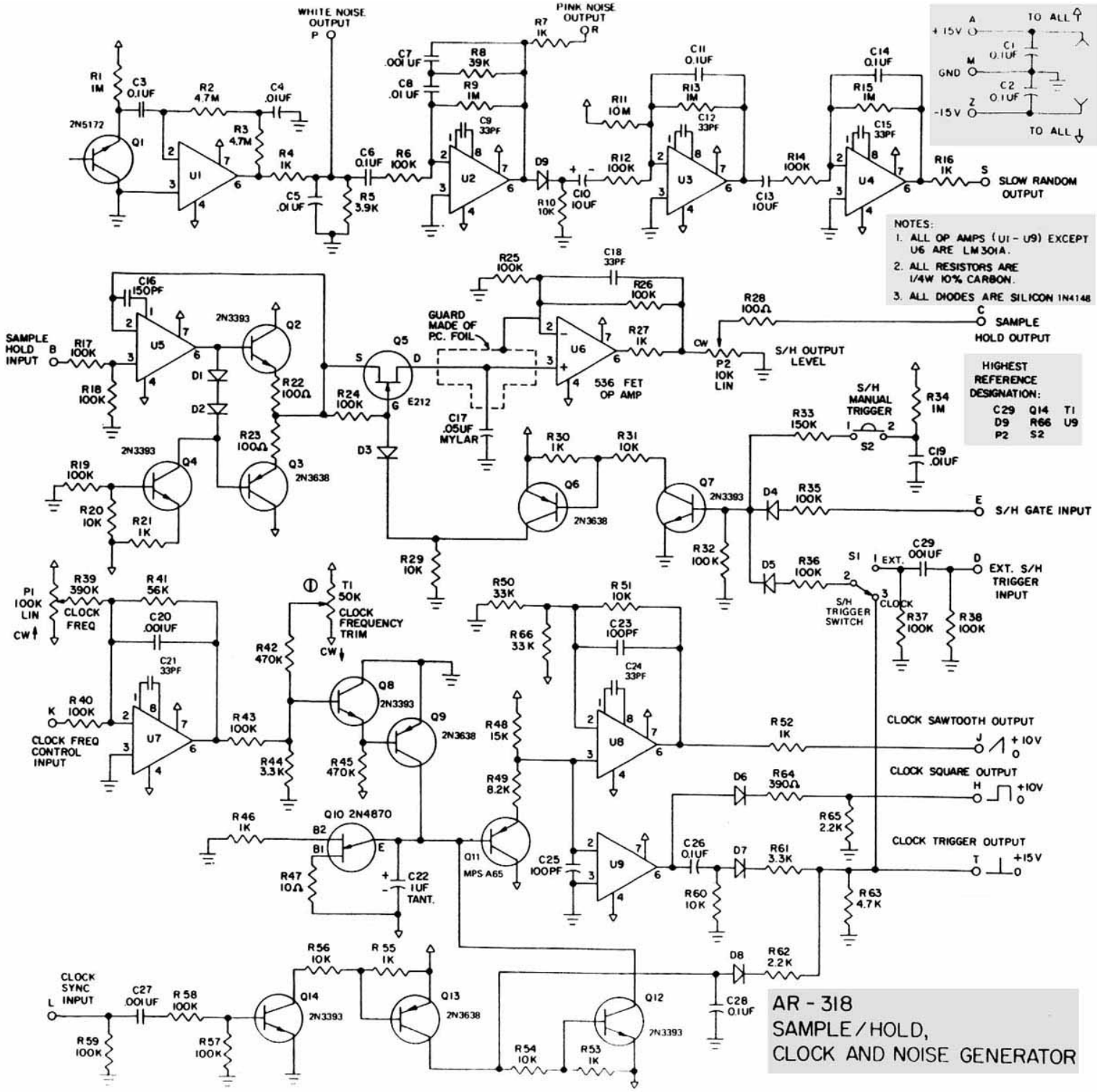
WHITE NOISE OUTPUT P
PINK NOISE OUTPUT R
SLOW RANDOM OUTPUT
SAMPLE HOLD OUTPUT
S/H OUTPUT LEVEL
SAMPLE HOLD INPUT
GUARD MADE OF P.C. FOIL
536 FET OP AMP
S/H MANUAL TRIGGER
S/H GATE INPUT
EXT. S/H TRIGGER INPUT
S/H TRIGGER SWITCH
CLOCK FREQ
CLOCK FREQUENCY TRIM
CLOCK FREQ CONTROL INPUT
CLOCK SAWTOOTH OUTPUT
CLOCK SQUARE OUTPUT
CLOCK TRIGGER OUTPUT
CLOCK SYNC INPUT
TO ALL
+15V
-15V
GND
NOTES:
1. ALL OP AMPS (U1 - U9) EXCEPT U6 ARE LM301A.
2. ALL RESISTORS ARE 1/4W 10% CARBON.
3. ALL DIODES ARE SILICON 1N4148
HIGHEST REFERENCE DESIGNATION:
C29 Q14 T1
D9 R66 U9
P2 S2
AR - 318
SAMPLE/HOLD,
CLOCK AND NOISE GENERATOR

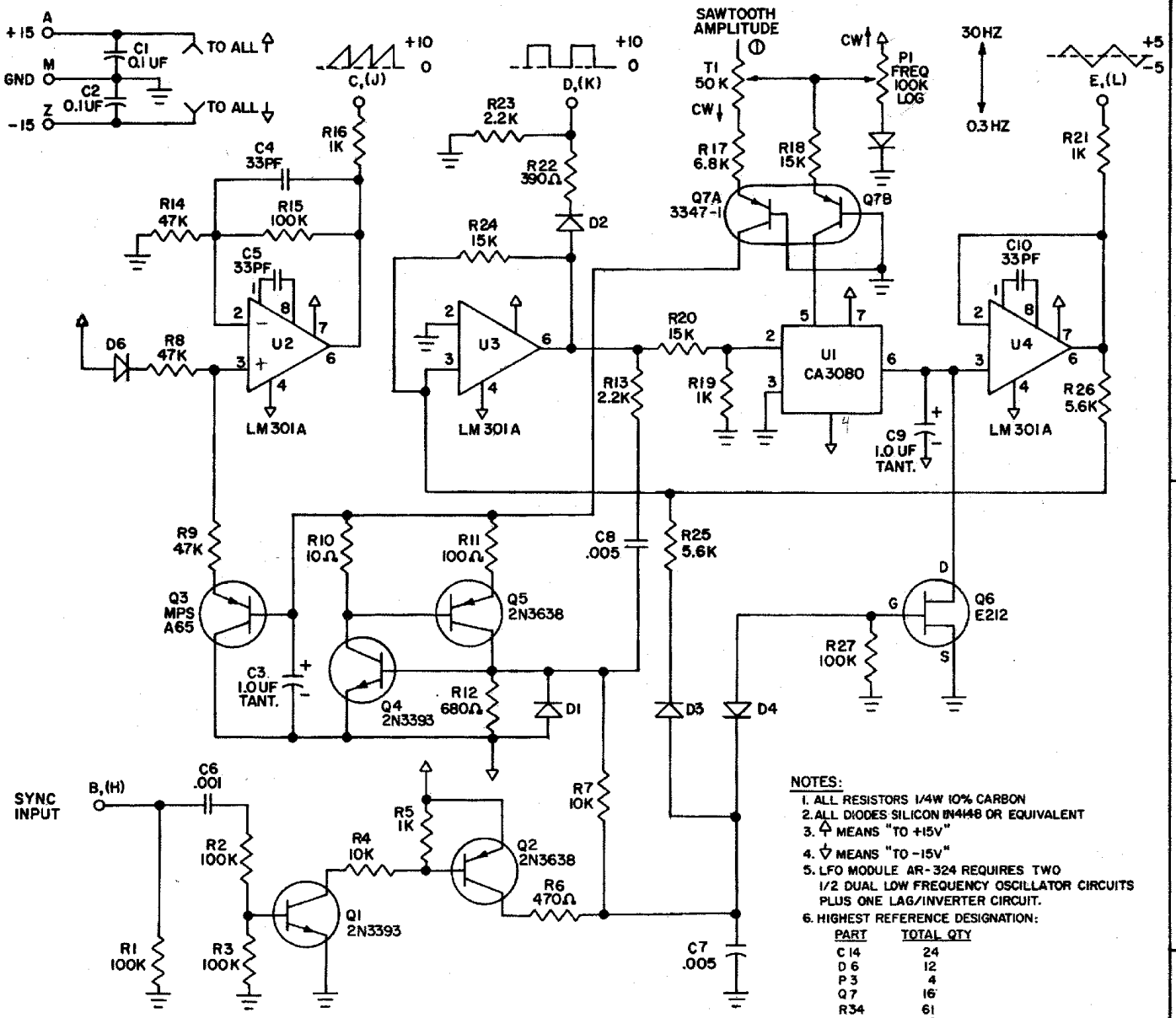

I/2 DUAL LOW FREQUENCY OSCILLATOR

NOTES:

1. ALL RESISTORS 1/4W 10% CARBON
2. ALL DIODES SILICON IN4148 OR EQUIVALENT
3. ⇧ MEANS "TO +15V"
4. ⇩ MEANS "TO -15V"
5. LFO MODULE AR-324 REQUIRES TWO 1/2 DUAL LOW FREQUENCY OSCILLATOR CIRCUITS PLUS ONE LAG/INVERTER CIRCUIT.
6. HIGHEST REFERENCE DESIGNATION:

PART	TOTAL QTY
C 14	24
D 6	12
P 3	4
Q 7	16
R 34	61
T 1	2
U 6	10

7. PIN DESIGNATIONS IN PARENTHESES ( ) REFER TO LFO #2.

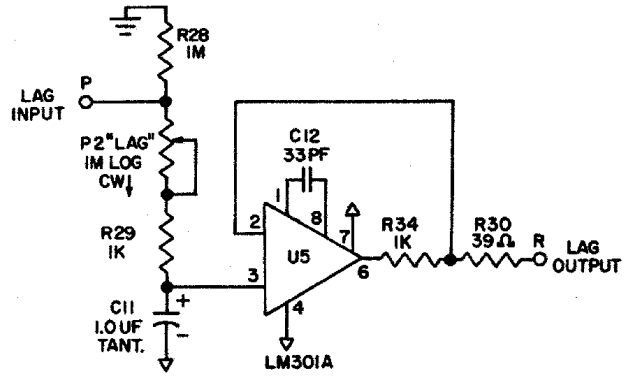

LAG CIRCUIT

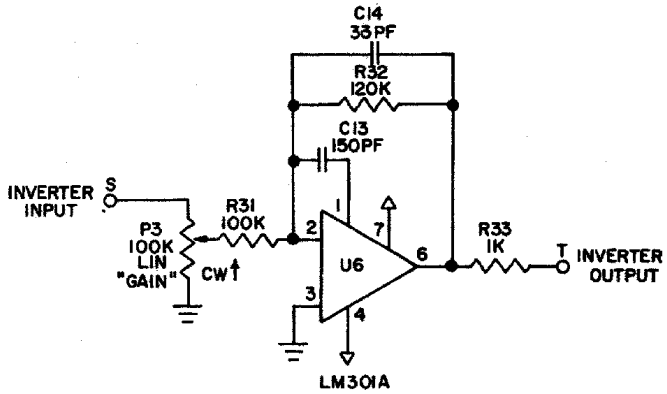

INVERTER CIRCUIT

AR-324
LAG, INVERTER
AND
1/2 DUAL LOW FREQUENCY OSCILLATOR

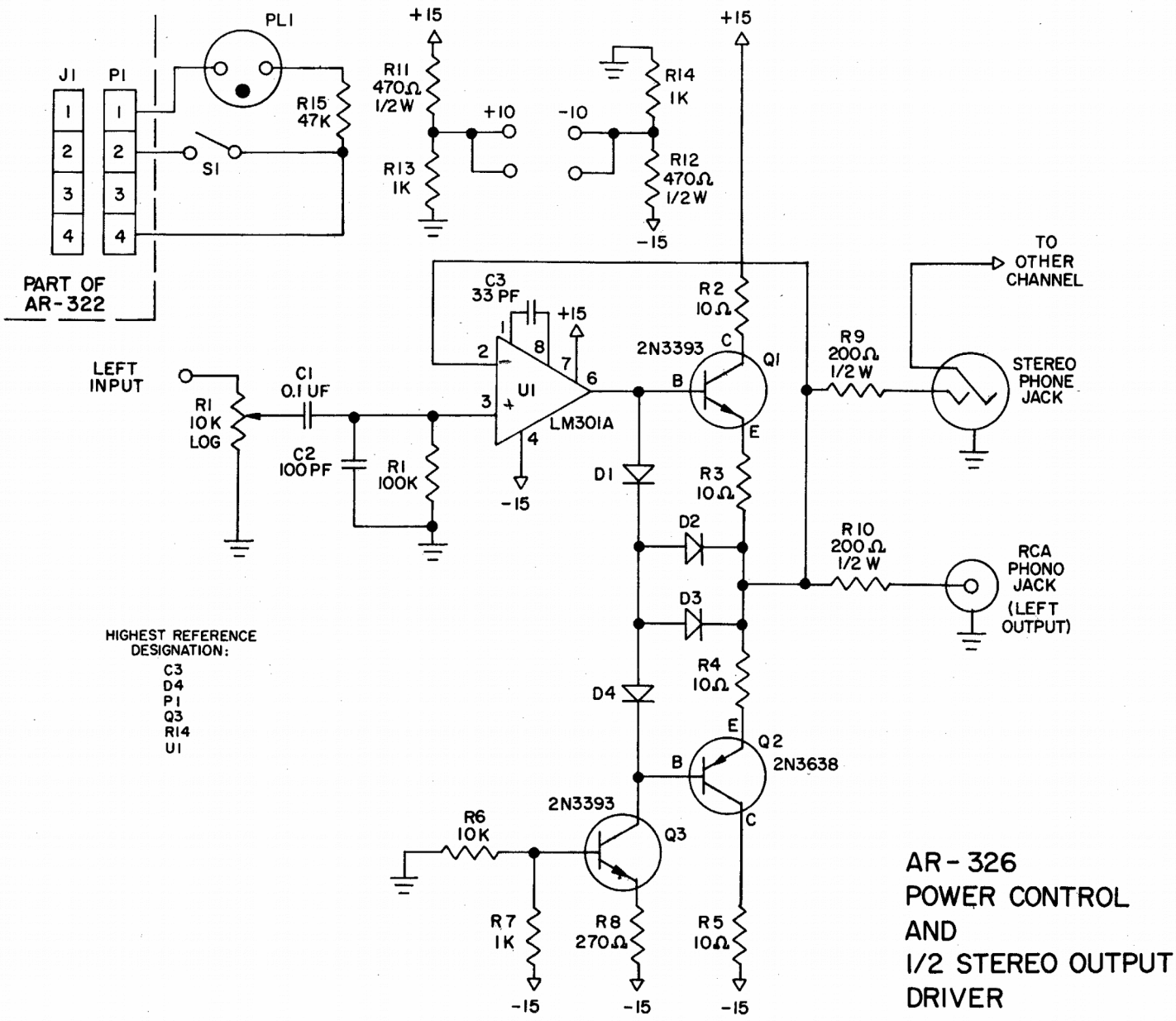

AR-326
POWER CONTROL
AND
1/2 STEREO OUTPUT
DRIVER

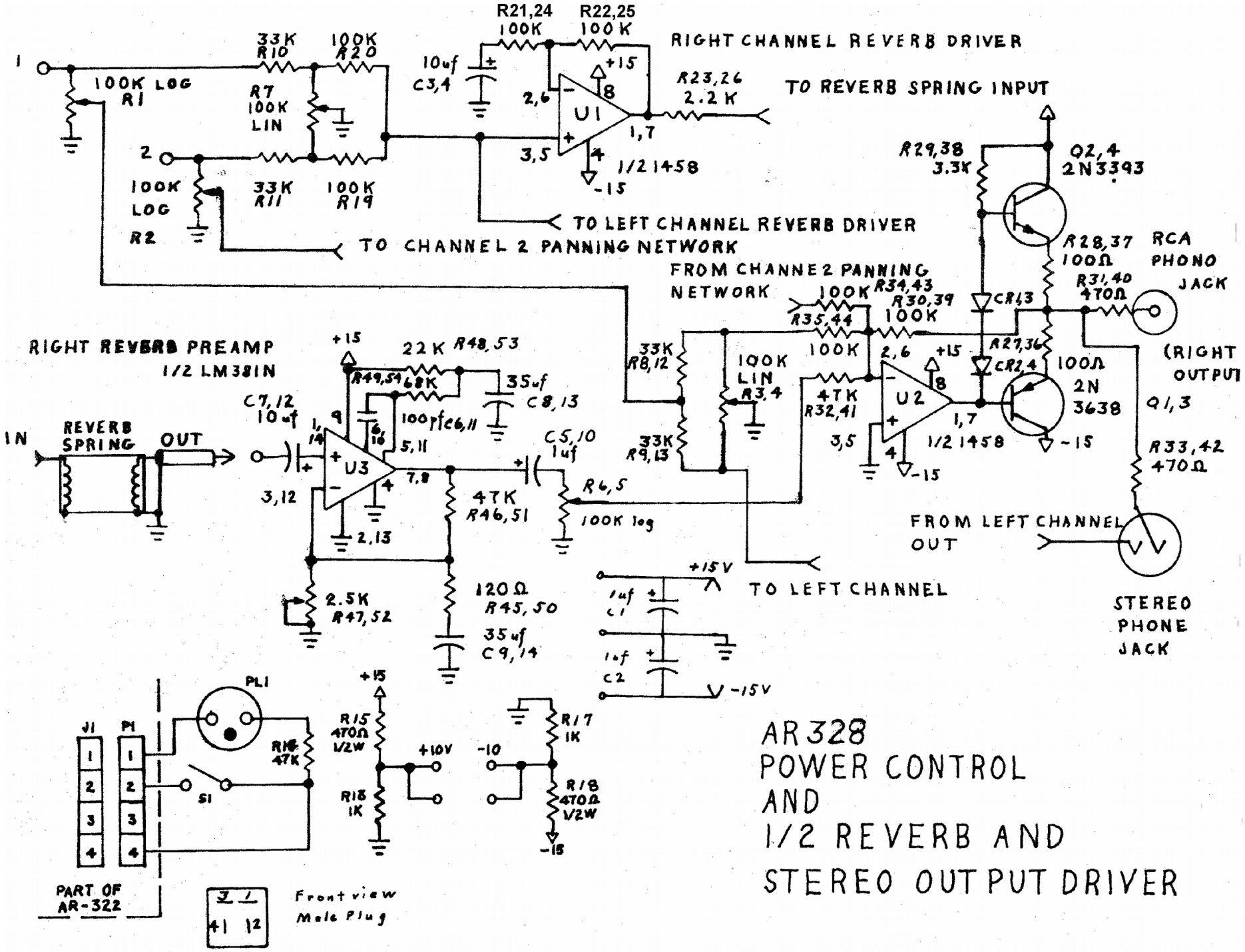
R21,24 100K
R22,25 100K
RIGHT CHANNEL REVERB DRIVER
33K R10
100K R20
100K LOG R1
R7 100K LIN
10uf C3,4
+15
R23,26 2.2K
TO REVERB SPRING INPUT
U1
1/2 1458
-15
100K LOG R2
33K R11
100K R19
TO LEFT CHANNEL REVERB DRIVER
TO CHANNEL 2 PANNING NETWORK
FROM CHANNEL 2 PANNING NETWORK
R29,38 3.3K
Q2,4 2N3393
R28,37 100Ω
RCA PHONO JACK
R31,40 470Ω
R34,43 100K
R30,39 100K
R35,44 100K
CR1,3
CR2,4
R27,36 100Ω
2N 3638
Q1,3
(RIGHT OUTPUT)
R33,42 470Ω
RIGHT REVERB PREAMP 1/2 LM381N
22K R48,53
R49,54 68K
35uf C8,13
C7,12 10uf
100pfc6,11
IN
REVERB SPRING
OUT
U3
C5,10 1uf
33K R8,12
100K LIN R3,4
33K R9,13
4TK R32,41
U2
R4,5 100K log
4TK R46,51
2.5K R47,52
120Ω R45,50
35uf C9,14
FROM LEFT CHANNEL OUT
TO LEFT CHANNEL
+15V
1uf C1
1uf C2
-15V
STEREO PHONE JACK
PL1
J1
P1
R16 47K
S1
R15 470Ω 1/2W
+10V
R18 1K
-10
R17 1K
R18 470Ω 1/2W
PART OF AR-322
Front view Male Plug
AR328
POWER CONTROL
AND
1/2 REVERB AND
STEREO OUTPUT DRIVER

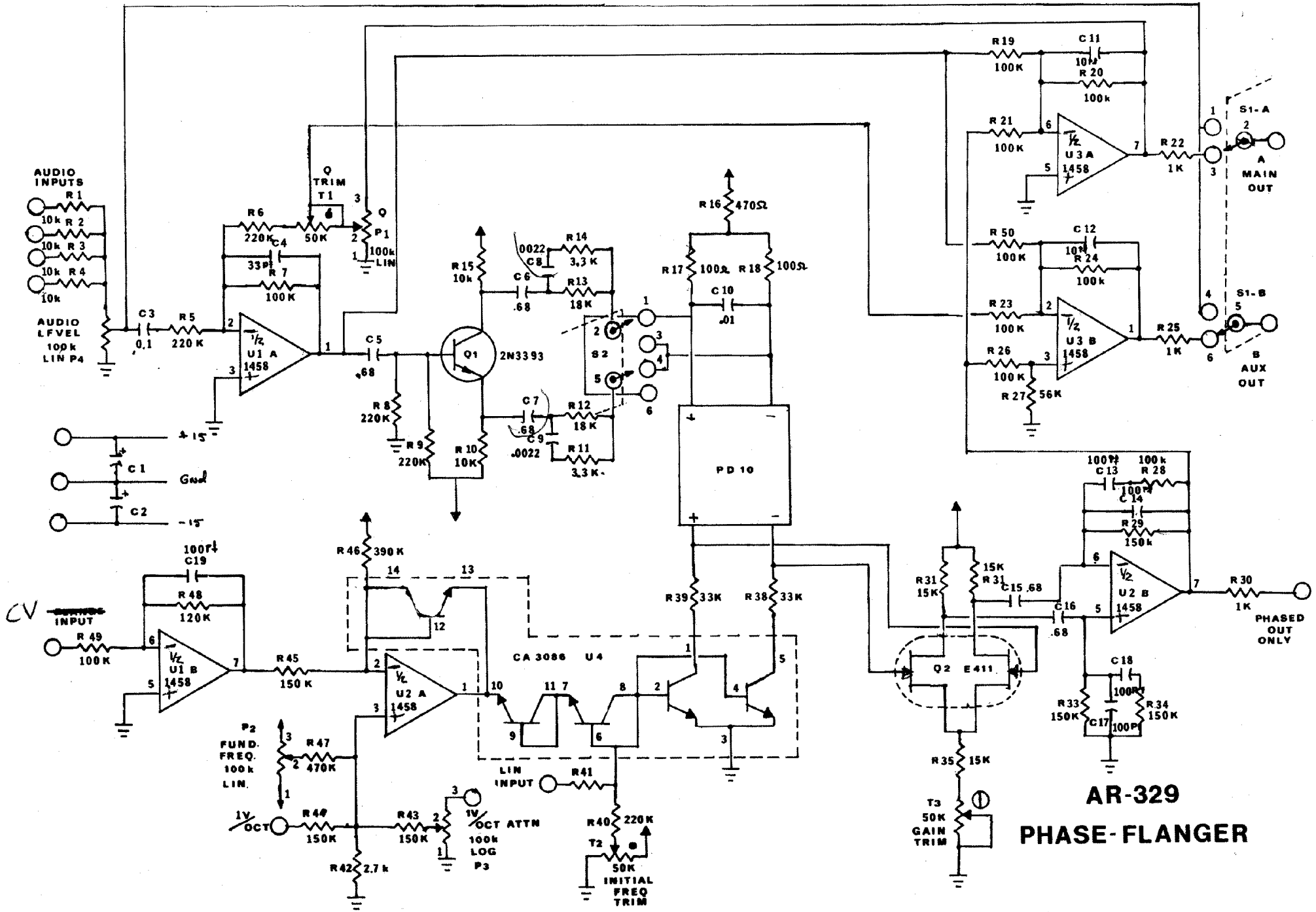
AUDIO INPUTS
R 1
10k R 2
10k R 3
10k R 4
10k
AUDIO LEVEL 100k LIN P4
C3 0.1
R5 220 K
Q TRIM T1
R6 220K
C4 33P
50K
R 7 100 K
Q P1 100k LIN
U1 A 1458
C5 .68
Q1 2N3393
R 8 220K
R 9 220K
R 10 10K
R 15 10k
C6 .68
0022 C8
R 14 3,3 K
R13 18K
C7 .68
C9 .0022
R12 18 K
R 11 3,3 K
R 16 470Ω
R 17 100Ω
R 18 100Ω
C 10 .01
S2
PD 10
+15
Gnd
-15
C1
C2
R 19 100K
C 11 10µ
R 20 100k
R 21 100K
U3A 1458
R 22 1K
S1-A
A MAIN OUT
R 50 100K
C 12 10µ
R 24 100k
R 23 100K
U3 B 1458
R 25 1K
S1-B
B AUX OUT
R 26 100K
R 27 56K
100P C13
100 k R 28
100P C14
R 29 150k
R 30 1K
PHASED OUT ONLY
U2 B 1458
C15 .68
C16 .68
R31 15K
R31 15K
Q2 E411
C18 100P
R33 150K
R34 150K
C17 100P
R35 15K
T3 50K GAIN TRIM
CV INPUT
100P C19
R48 120K
R 49 100K
U1 B 1458
R45 150 K
R 46 390 K
CA 3086 U4
U2 A 1458
R39 33K
R38 33K
P2 FUND. FREQ. 100k LIN.
R 47 470K
1V/OCT
R44 150K
R43 150K
1V/OCT ATTN 100k LOG P3
R42 2.7 k
LIN INPUT
R41
R40 220K
T2 50K INITIAL FREQ TRIM
AR-329
PHASE-FLANGER