PF-350



PF-500



& PF-800



Bass Guitar Amplifiers

Owner's Manual

TABLE OF CONTENTS

Important Safety Instructions 2
Introduction 4
PF-350 5-10
(Front/Rear Panel, Block Diagram, Tech Specs, Service Info)
PF-500 / PF-800 11-17
(Front/Rear Panel, Block Diagram, Tech Specs, Service Info)
Fault/Thermal Considerations 18

IMPORTANT SAFETY INSTRUCTIONS

1. Read these instructions.

2. Keep these instructions.

3. Heed all warnings.

4. Follow all instructions.

5. Do not use this apparatus near water.

6. Clean only with a dry cloth.

7. Do not block any ventilation openings. Install in accordance with the manufacturer's instructions.

8. Do not install near any heat sources such as radiators, heat registers, stoves, or other apparatus (including amplifiers) that produce heat.

9. Do not defeat the safety purpose of the polarized or grounding-type plug. A polarized plug has two blades with one wider than the other. A grounding-type plug has two blades and a third grounding prong. The wide blade or the third prong are provided for your safety. If the provided plug does not fit into your outlet, consult an electrician for replacement of the obsolete outlet.

10. Protect the power cord from being walked on or pinched particularly at plugs, convenience receptacles, and the point where they exit from the apparatus.

11. Only use attachments/accessories specified by the manufacturer.

12. Use only with a cart, stand, tripod, bracket, or table specified by the manufacturer, or sold with the apparatus. When a cart is used, use caution when moving the cart/ apparatus combination to avoid injury from tip-over.



13. Unplug this apparatus during lightning storms or when unused for long periods of time.

14. Refer all servicing to qualified service personnel. Servicing is required when the apparatus has been damaged in any way, such as power-supply cord or plug is damaged, liquid has been spilled or objects have fallen into the apparatus, the apparatus has been exposed to rain or moisture, does not operate normally, or has been dropped.

15. Do not overload wall outlets and extension cords as this can result in a risk of fire or electric shock.

16. This apparatus shall not be exposed to dripping or splashing, and no object filled with liquids, such as vases or beer glasses, shall be placed on the apparatus.

17. This apparatus has been designed with Class-I construction and must be connected to a mains socket outlet with a protective earthing connection (the third grounding prong).

18. The MAINS plug or an appliance coupler is used as the disconnect device, so the disconnect device shall remain readily operable.

19. For the terminals marked with symbol of " ϟ " may be of sufficient magnitude to constitute a risk of electric shock. The external wiring connected to the terminals requires installation by an instructed person or the used of ready-made leads or cords.





The lightning flash with arrowhead symbol within an equilateral triangle is intended to alert the user to the presence of uninsulated "dangerous voltage" within the product's enclosure, that may be of sufficient magnitude to constitute a risk of electric shock to persons.
Le symbole éclair avec point de flèche à l'intérieur d'un triangle équilatéral est utilisé pour alerter l'utilisateur de la présence à l'intérieur du coffret de "voltage dangereux" non isolé d'ampleur suffisante pour constituer un risque d'éléctrocution.



The exclamation point within an equilateral triangle is intended to alert the user of the presence of important operating and maintenance (servicing) instructions in the literature accompanying the appliance.
Le point d'exclamation à l'intérieur d'un triangle équilatéral est employé pour alerter les utilisateurs de la présence d'instructions importantes pour le fonctionnement et l'entretien (service) dans le livret d'instruction accompagnant l'appareil.

WARNING — To reduce the risk of fire or electric shock, do not expose this apparatus to rain or moisture.

NOTE: This equipment has been tested and found to comply with the limits for a Class B digital device, pursuant to part 15 of the FCC Rules. These limits are designed to provide reasonable protection against harmful interference in a residential installation. This equipment generates, uses, and can radiate radio frequency energy and, if not installed and used in accordance with the instructions, may cause harmful interference to radio communications. However, there is no guarantee that interference will not occur in a particular installation. If this equipment does cause harmful interference to radio or television reception, which can be determined by turning the equipment off and on, the user is encouraged to try to correct the interference by one or more of the following measures:

- Reorient or relocate the receiving antenna.
- Increase the separation between the equipment and the receiver.
- Connect the equipment into an outlet on a circuit different from that to which the receiver is connected.
- Consult the dealer or an experienced radio/TV technician for help.

CAUTION: Changes or modifications to this device not expressly approved by LOUD Technologies Inc. could void the user's authority to operate the equipment under FCC rules.

This apparatus does not exceed the Class A/Class B (whichever is applicable) limits for radio noise emissions from digital apparatus as set out in the radio interference regulations of the Canadian Department of Communications.

ATTENTION — Le présent appareil numérique n'émet pas de bruits radioélectriques dépassant las limites applicables aux appareils numériques de class A/de class B (selon le cas) prescrites dans le réglement sur le brouillage radioélectrique édicté par les ministere des communications du Canada.

Exposure to extremely high noise levels may cause permanent hearing loss. Individuals vary considerably in susceptibility to noise-induced hearing loss, but nearly everyone will lose some hearing if exposed to sufficiently intense noise for a period of time. The U.S. Government's Occupational Safety and Health Administration (OSHA) has specified the permissible noise level exposures shown in the following chart.

According to OSHA, any exposure in excess of these permissible limits could result in some hearing loss. To ensure against potentially dangerous exposure to high sound pressure levels, it is recommended that all persons exposed to equipment capable of producing high sound pressure levels use hearing protectors while the equipment is in operation. Ear plugs or protectors in the ear canals or over the ears must be worn when operating the equipment in order to prevent permanent hearing loss if exposure is in excess of the limits set forth here:

Duration, per day in hours	Sound Level dBA, Slow Response	Typical Example
8	90	Duo in small club
6	92	
4	95	Subway Train
3	97	
2	100	Very loud classical music
1.5	102	
1	105	The boss screaming at his minions about manual deadlines
0.5	110	
0.25 or less	115	Loudest parts at a rock concert

CONSIGNES DE SECURITE IMPORTANTES

- LIRE, SUIVRE TOUTES LES INSTRUCTIONS ET LES PRECAUTIONS D'UTILISATION

- NE PAS UTILISER PROCHE D'UNE SOURCE DE CHALEUR ET NE PAS BLOQUER OU OBSTRUER LE SYSTEME DE VENTILATION SUR CET APPAREIL. POUR UNE UTILISATION CONFORME, CET APPAREIL NECESSITE ENVIRON 7CM D'ESPACE BIEN VENTILE AUTOUR DE SON SYSTEME DE REFROIDISSEMENT, AINSI QU'UN COURANT D'AIR FRAIS CONSTANT

- NE PAS UTILISER CET APPAREIL PROCHE D'UNE SOURCE LIQUIDE

- NETTOYER SEULEMENT A L'AIDE D'UN CHIFFON DOUX ET SEC ET NE PAS UTILISER DE PRODUITS MENAGERS

- CONNECTER UNIQUEMENT LE CABLE D'ALIMENTATION FOURNI SUR UNE PRISE AVEC MISE A LA TERRE, ET COMPATIBLE AVEC LA TENSION, L'INTENSITE ET LA FREQUENCE REQUISES INDIQUEES SUR LA FACE ARRIERE DE L'APPAREIL

- S'ASSURER DE NE PAS MARCHER, PLIER OU TIRER SUR LE CABLE D'ALIMENTATION

- DEBRANCHER L'APPAREIL LORS D'UNE TEMPETE OU LORS D'UNE TRES LONGUE PERIODE DE NON UTILISATION

- UTILISER UNIQUEMENT DES ACCESSOIRES SPECIFIES PAR LE FABRICANT POUR UNE UTILISATION EN TOUTE SECURITE ET POUR EVITER DES BLESSURES

- **ATTENTION:** AFIN DE PREVENIR TOUT RISQUE DE CHOCS ELECTRIQUES OU DE DEBUT D'INCENDIE, NE PAS EXPOSER CET APPAREIL A LA PLUIE ET A L'HUMIDITE

- TOUT ENTRETIEN DOIT ETRE FAIT PAR UN TECHNICIEN QUALIFIE

- NOS AMPLIFICATEURS PEUVENT PRODUIRE DE TRES HAUTES PRESSIONS ACOUSTIQUES QUI PEUVENT CAUSER DES DOMMAGES AUDITIFS PERMANENTS OU DEFINITIFS. L'UTILISER AVEC UNE GRANDE PRECAUTION EST CONSEILLE ET DES PROTECTIONS AUDITIVES SONT RECOMMANDEES POUR UNE UTILISATION A FORT VOLUME.

- **ATTENTION:** CET APPAREIL REQUIERT UNE PRISE MURALE AVEC MISE A LA TERRE, AUX NORMES ACTUELLES ET COMPATIBLE AVEC LES SPECIFICATIONS ELECTRIQUES SE TROUVANT EN FACE ARRIERE DE L'APPAREIL. LA PRISE ELECTRIQUE DOIT RESTER ACCESSIBLE POUR DEBRANCHER L'APPAREIL EN CAS DE DEFAUT PENDANT L'UTILISATION

- CET APPAREIL DOIT ETRE DEBRANCHE SI IL N'EST PAS UTILISE

Elimination correcte du produit : Ce symbole indique que ce produit ne doit pas être éliminé avec les ordures ménagères, comme le prévoiT la directive WEEE (2002/96/EC) et votre loi nationale.

Ce produit doit être remis à un site de recyclage des déchets électriques et des équipements électroniques (EEE).

Un mauvais recyclage de ce type de déchet peut avoir de possibles impacts négatifs sur l'environnement et la santé humaine dus aux émanations de substances.

Dans un même temps, votre coopération à un recyclage correct de ce produit contribuera à la bonne utilisation des ressources naturelles.

Pour connaître l'endroit où il est possible de recycler ces équipements, merci de contacter votre mairie, les services de recyclages ou le service des déchets ménagers.



Correct disposal of this product: This symbol indicates that this product should not be disposed of with your household waste, according to the WEEE directive (2002/96/EC) and your national law. This product should be handed over to an authorized collection site for recycling waste electrical and electronic equipment (EEE). Improper handling of this type of waste could have a possible negative impact on the environment and human health due to potentially hazardous substances that are generally associated with EEE. At the same time, your cooperation in the correct disposal of this product will contribute to the effective usage of natural resources. For more information about where you can drop off your waste equipment for recycling, please contact your local city office, waste authority, or your household waste disposal service.

Introduction

Portable. Powerful. Sexy. Ampeg designed and built the original Portaflex Series over 50 years ago. Congratulations are in order – for today, in your hands, is the new-and-improved Portaflex!

Featuring Class-D power and knobs galore, these beasts pack a mean punch with a wide variety of tones at your disposal. Also, the switching power supply keeps the weight low, without sacrificing power output or our legendary sound quality.

Don't stop now! Your Portaflex amplifier is an ideal companion to the Ampeg PF-115HE, PF-115LF, PF-210HE, or PF-410HLF cabinet, available separately.

Like all Ampeg products, your Portaflex amplifier is designed by musicians and built using only the best of components. Each amplifier is tested to confirm that it meets our specifications, and we believe that this amplifier is the absolute best that it can be.

In order to get the most out of your new amplifier, please read this manual before you begin playing.

And **thank you** for choosing Ampeg.

Here are some of the features packed into your new PF-350 Amplifier:

- Selectable -15 dB input pad
- Gain control
- Bass, Mid, and Treble controls
- Master volume control
- Selectable Limiter and LED [PF-350 only]
- Peak LED
- Stereo 1/8" auxiliary input
- Headphone output
- Effects loop with separate send and return jacks
- Balanced XLR line output
- Lightweight and fan-cooled switching power supply
- Voltage selector switch
- Class-D power amplifier rated at 350 watts rms into 4 ohms [PF-350]

The PF-500 and PF-800 Amplifier have the same features as the PF-350, as well as the following:

- Dual JFET preamp
- Mute switch
- Dual-function mute and peak LED
- On-board variable compressor
- Ultra Lo and Ultra Hi switches
- 5-way Midrange Frequency control
- FX Mix control
- Tuner output
- Preamp Out and Power Amp In jacks
- Footswitch jack
- Single Speakon & 1/4" speaker output jacks
- Class-D power amplifier rated at 500 watts rms into 4 ohms [PF-500]
- Class-D power amplifier rated at 800 watts rms into 4 ohms [PF-800]
- XLR Line Out features:
  - Pre/Post EQ
  - –40 dB pad (mic/line level)
  - Ground lift

PF-350 Front Panel

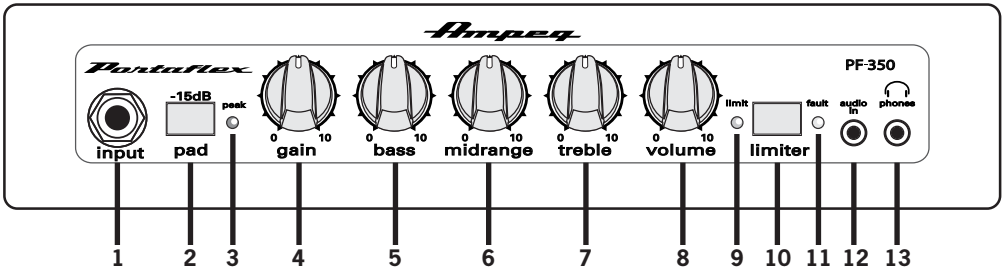

1. **INPUT:** The signal output from an instrument (active or passive) may be connected to this 1/4" input by means of a shielded instrument cable.
2. **–15 dB PAD:** Press this switch in to reduce the input signal by 15 dB and compensate for higher output sources. This attenuation is suited for use with basses that have active electronics or high-output pickups. Use this pad if you notice that the peak LED [3] comes on regularly. It will reduce the chance of overdriving the preamplifier stage, and allow more usable range and fine adjustment of the gain control.
3. **PEAK LED:** This red warning LED will come on if: the input signal is too high, the gain control is set too high, or there is too much boost from the bass, midrange and treble controls. If it comes on regularly, even when these controls are low, try engaging the –15 dB pad [2].
4. **GAIN:** This varies the amount of signal driving the preamplifier. If a small clockwise rotation from minimum leads to overloading and the peak LED illuminating, try engaging the –15 dB pad. This will give more usable range with the gain control.
5. **BASS:** Use this to adjust the low frequency level of the amplifier. This provides up to 14 dB of boost, or –12 dB of cut at 40 Hz. The low frequency output is flattest at the center position.
6. **MIDRANGE:** Use this to adjust the midrange frequency level of the amplifier. This provides up to 5 dB of boost, or –13 dB of cut at 500 Hz. The midrange frequency output is flat at the center position. Rotate the control counter clockwise for a “contoured” sound (more distant, less midrange output) or clockwise for a sound which really cuts through.
7. **TREBLE:** Use this to adjust the high frequency level of the amplifier. This provides up to 19 dB of boost, or –25 dB of cut at 8 kHz. The high frequency output is flattest at the center position.
8. **VOLUME:** Use this to control the overall output level. It affects the speaker outputs and preamp level to the headphone output. Use it wisely, and turn it down when making connections, putting on headphones, or trying something new.

PF-350 Front Panel continued

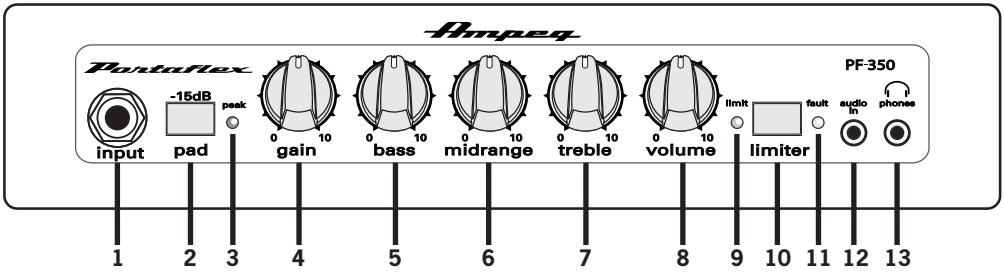

9. **LIMIT LED:** This LED illuminates when the limiter circuit is activated, indicating that the amplifier is nearing full output and the limiter is keeping peak signals from clipping the output.

10. **LIMITER SWITCH:** Press this switch in to add the limiter circuit. If the signals driving the amplifier start to peak, the limiter will automatically reduce the signals to prevent clipping, and the LED [9] will flash. The limiter will help keep the amplifier's output "clean" up to high output levels and avoid potentially damaging distortion.

11. **FAULT LED:** This LED illuminates amber if the amp thermals and shuts down or develops other fault conditions. See "Fault/Thermal Considerations" on page 18 for more information.

12. **AUDIO IN:** The audio output from line-level sources, such as an iPod®, MP3, or CD player, can connect to this 1/8" TRS stereo input. The incoming audio is mixed with the preamp signals, so you can play along to a practice track as you listen with headphones. (The audio coming in here only plays in the headphones, and appears nowhere else. It is not affected by the volume control.)

13. **PHONES:** Use this 1/8" TRS stereo output to connect your headphones. The output here is a mix of the line-level signals reaching the amplifier, and any incoming audio from the audio in jack [12].

    If you just want to listen and practice through headphones, disconnect the speaker-level outputs [18] from the speaker cabinet. There is no harm in playing the PF-350 without speakers.

    ⚠ Before putting on headphones, make sure the volume control [8] is turned down, and (if connected) any external audio source has its level turned down. This will reduce the chance of hearing damage due to loud volumes.

PF-350 Rear Panel

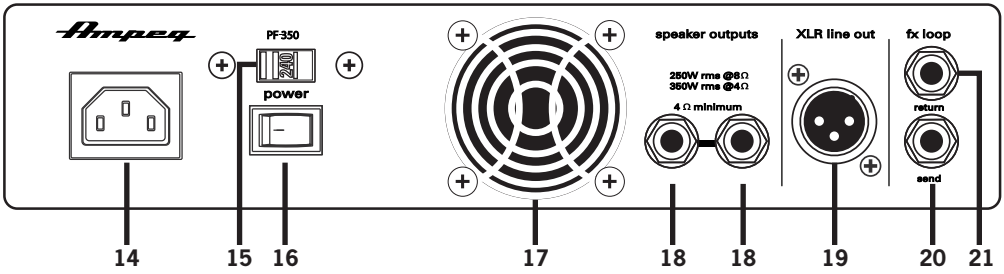

14. IEC POWER INPUT CONNECTOR: This is where you connect the supplied AC power cord.

⚠ Before plugging in the power cord, make sure that the voltage selector switch [15] is set to the same voltage as your local AC mains.

15. VOLTAGE SELECTOR SWITCH:

⚠ Make sure the switch is in the correct position for your local AC mains voltage before you plug in the AC power cord. Use a small flat screwdriver to slide the switch if required.

16. POWER SWITCH: Use this switch to turn the overall system power on or off. Press the switch to the left to turn on the power. Press the switch to the right to put the amp into standby mode. It will not function, but the circuits are still live. To remove AC power, either turn off the AC mains supply, or unplug the power cord from the amplifier and the AC mains supply.

17. VENTILATION: Make sure that the ventilation openings are not obscured in any way. This will allow the flow of cooling air to the power amplifier's heatsinks. See "Fault/Thermal Considerations" on page 18 for more information.

18. SPEAKER OUTPUTS: These 1/4" TS output jacks supply speaker-level power to the speaker cabinet. The rated power output is 250 watts rms into 8 ohms or 350 watts rms into 4 ohms.

⚠ The two identical outputs are wired in parallel, and you can use either one, or use both. Make sure the total speaker impedance load is 4 ohms or greater.

For example, you could connect:

Two 16 ohm speakers (an 8 ohm load),

Two 8 ohm speakers (a 4 ohm load)

or one 4 ohm speaker.

⚠ Use speaker cables with 1/4" TS ends to make the connections. Do not use instrument cables as they may overheat.

19. XLR LINE OUT JACK: Typically, you would connect this balanced output to the balanced input of an external mixer, or a recorder. In this way, you do not have to mic the speaker cabinet in order to add it to the main mix, or to record. The output is not affected by the volume control [8].

This output can connect to external power amplifiers, or powered loudspeakers, as long as they have their own input controls to adjust the volume level.

Balanced connections allow long cable runs to be used, as hum and noise pickup in the line is minimized.

PF-350 Rear Panel continued

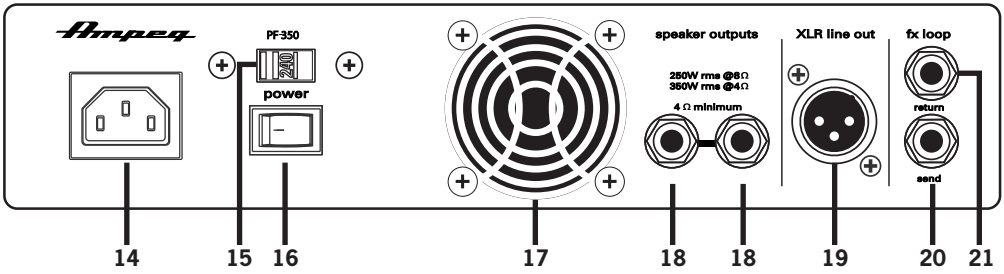

20. FX SEND JACK: Use this 1/4" TS unbalanced output to send a line-level output to an external effects processor (for example). The output here is affected by all controls except the volume.

Use the FX return jack to feed the returned processed signals back into the power amplifier.

21. FX RETURN JACK: Use this 1/4" TS unbalanced input to return the processed line-level output of an external effects processor (for example). The processor could be fed by signals from the FX send.

PF-350 Block Diagram

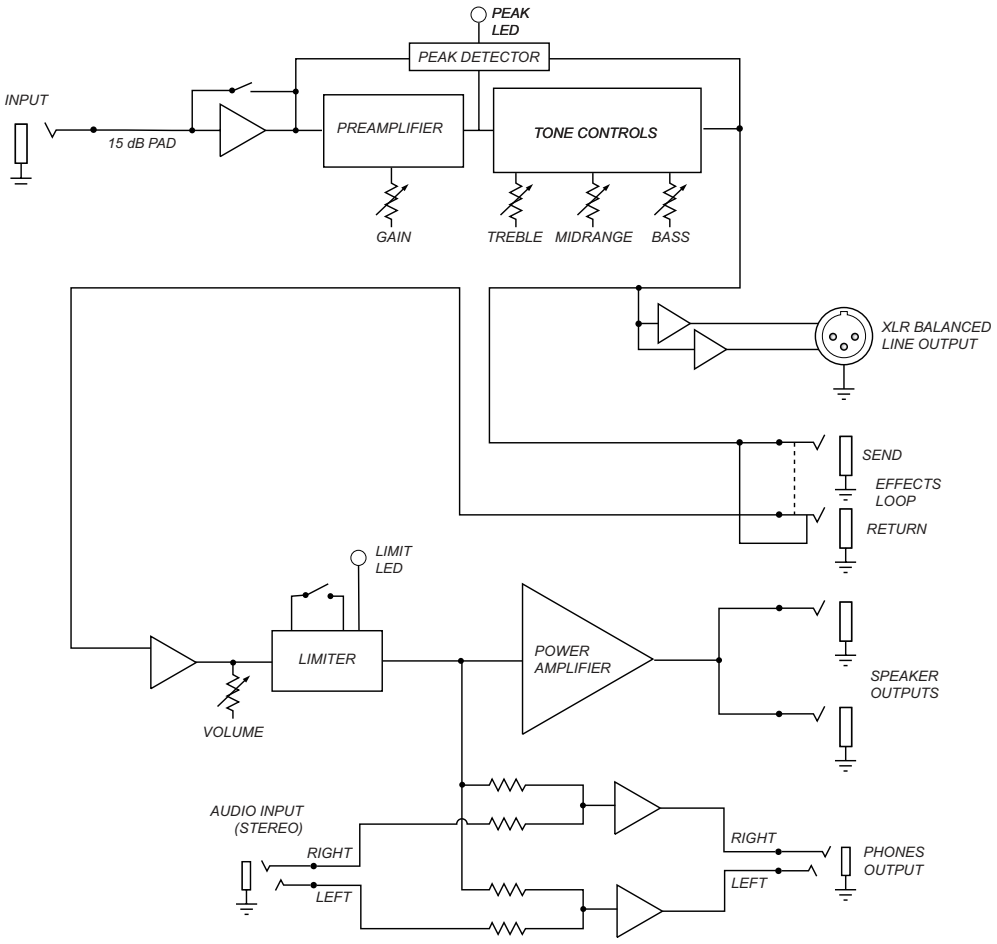

PF-350 TECHNICAL SPECIFICATIONS

Output Power Rating	250 watts rms @ 8 ohms, 5% THD 350 watts rms @ 4 ohms, 5% THD
Signal to Noise Ratio	75 dB (20 Hz–20 kHz, unweighted)
Maximum Gain	64 dB, tone controls centered
Tone Controls	Bass: +14/–12 dB @ 40 Hz Midrange: +5/–13 dB @ 500 Hz Treble: +19/–25 dB @ 8 kHz
Power Requirements	~100–120 VAC, 50–60 Hz, 100W ~200–240 VAC, 50–60 Hz, 100W
Size (H x W x D)	2.7 in / 69 mm x 10.8 in / 275 mm x 10.7 in / 272 mm
Weight	7.8 lb/3.5 kg (approximately)

The PF-350 is covered with sheet metal, so be sure to clean with a dry lint-free cloth. Never spray cleaning agents on the PF-350. Avoid abrasive cleansers which would damage the finish.

Ampeg continually develops new products and improves upon existing ones. For this reason, the specifications and information in this manual are subject to change without notice.
"Ampeg" is a registered trademark of LOUD Technologies Inc. All other brand names mentioned are trademarks or registered trademarks of their respective holders and are hereby acknowledged.

Service Information

If you are having a problem with your PF-350, you can go to our website (www.ampeg.com) and click on Support for service information, or call Technical Support at 1-800-898-3211 Monday-Friday during normal business hours, PST, to receive assistance. If you are outside of the U.S., contact your local distributor for technical support and service.

PF-500 / PF-800 Front Panel

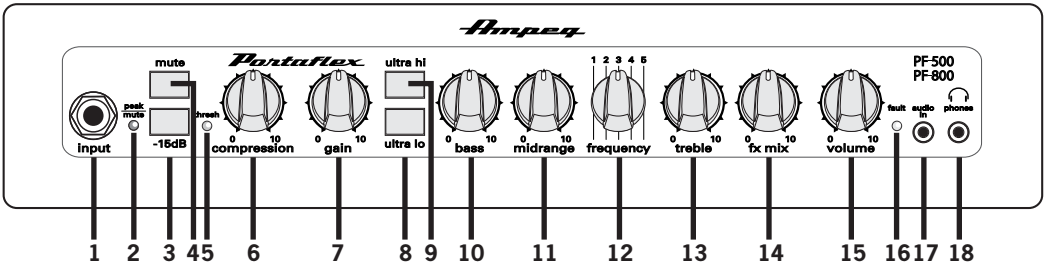

1 2 3 4 5 6 7 8 9 10 11 12 13 14 15 16 17 18

1. **INPUT:** The signal output from an instrument (active or passive) may be connected to this 1/4" input by means of a shielded instrument cable.
2. **PEAK/MUTE LED:** This red warning LED will come on if: the mute switch [4] is engaged, or if the input signal is too high, the gain control is set too high, or there is too much boost from the bass, midrange and treble controls. If it comes on regularly, even when these controls are low, try engaging the –15 dB pad [3].
3. **–15 dB PAD:** Press this switch in to reduce the input signal by 15 dB and compensate for higher output sources. This attenuation is suited for use with basses that have active electronics or high-output pickups. Use this pad if you notice that the peak/mute LED [2] comes on regularly. It will reduce the chance of overdriving the preamplifier stage, and allow more usable range and fine adjustment of the gain control.
4. **MUTE:** Press this switch in to mute the signal. The peak/mute LED [2] will illuminate when this switch is engaged.
5. **THRESH LED:** This illuminates when the signal level is above the compressor threshold and gain reduction is active.
6. **COMPRESSION:** This controls the amount of signal compression. At the fully counter-clockwise position, there is no compression; at the fully clockwise position, the compression ratio is 10:1. The sonic effect of compression is reduced dynamics, increased sustain and a more consistent output level regardless of how light or hard the strings are played. The compressor is very transparent - that is, there is very little effect on the tone of your instrument.
7. **GAIN:** This varies the amount of signal driving the preamplifier. If a small clockwise rotation from minimum leads to overloading and the peak LED illuminating, try engaging the –15 dB pad. This will give more usable range with the gain control.
8. **ULTRA LO:** This switch, when engaged, enhances the amount of low-end output by 2 dB at 40 Hz and –10 dB cut at 500 Hz.
9. **ULTRA HI:** This switch, when engaged, enhances the amount of high frequency output by 9 dB at 8 kHz.
10. **BASS:** Use this to adjust the low frequency level of the amplifier. This provides up to 12 dB of boost, or –12 dB of cut at 40 Hz. The low frequency output is flat at the center position.

PF-500 / PF-800 Front Panel continued

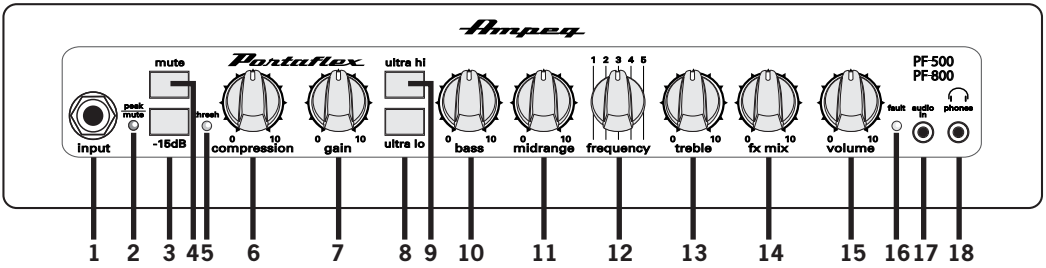

11. **MIDRANGE:** Use this to adjust the midrange frequency level of the amplifier. This provides up to 10 dB of boost, or –20 dB of cut at the frequency selected. The midrange frequency output is flat at the center position. Rotate the control counter clockwise for a "contoured" sound (more distant, less midrange output) or clockwise for a sound which really cuts through.
12. **FREQUENCY:** This control allows you to select the center frequency for the mid-range control [11], giving you a choice of five "voices" for the midrange. The numbers correspond to the following center frequencies: 1=220 Hz, 2=450 Hz, 3=800 Hz, 4=1.6 kHz, 5=3 kHz.
13. **TREBLE:** Use this to adjust the high frequency level of the amplifier. This provides up to 15 dB of boost, or –20 dB of cut at 4 kHz. The high frequency output is flat at the center position.
14. **FX MIX:** This control varies the mix between the direct (dry) signal and the effects (wet) when the effects loop is used. Fully counter-clockwise results in all direct signal (no effect) and fully clockwise adds all effect with no direct signal. The fully clockwise position is equivalent to a series effects loop and should be used with such devices as limiters and equalizers.
15. **VOLUME:** Use this to control the overall output level. It affects the preamp level to speaker and phone outputs. Use it wisely, and turn it down when making connections, putting on headphones, or trying something new.
16. **FAULT LED:** This LED illuminates amber if the amp thermals and shuts down or develops other fault conditions. See "Fault/Thermal Considerations" on page 18 for more information.
17. **AUDIO IN:** The audio output from line-level sources, such as an iPod®, MP3, or CD player, can connect to this 1/8" TRS stereo input. The incoming audio is mixed with the preamp signals, so you can play along to a practice track, as you listen with headphones. (The audio coming in here only plays in the headphones, and appears nowhere else. It does not affect the signal fed to the audio input.)

PF-500 / PF-800 Front Panel continued

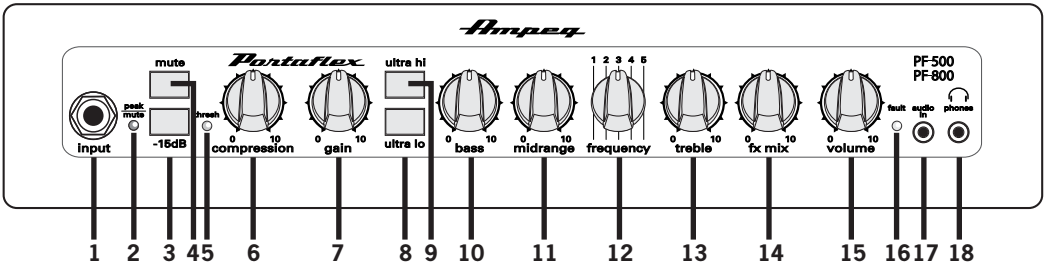

18. PHONES: Use this 1/8" TRS stereo output to connect your headphones. The output here is a mix of the line-level signals reaching the amplifier, and any incoming audio from the audio in jack [17].

If you just want to listen and practice through headphones, disconnect the speaker-level outputs [23] from the speaker cabinet. There is no harm in playing the PF-500 / PF-800 without speakers.

⚠ Before putting on headphones, make sure the volume control [15] is turned down, and (if connected) any external audio source has its level turned down. This will reduce the chance of hearing damage due to loud volumes.

PF-500 / PF-800 Rear Panel

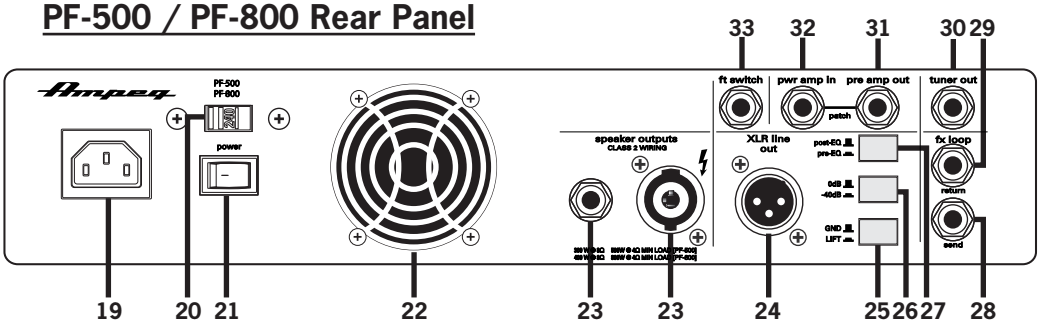

19. IEC POWER INPUT CONNECTOR: This is where you connect the supplied AC power cord.

⚠ Before plugging in the power cord, make sure that the voltage selector switch [20] is set to the same voltage as your local AC mains.

20. VOLTAGE SELECTOR SWITCH:

⚠ Make sure the switch is in the correct position for your local AC mains voltage before you plug in the AC power cord. Use a small flat screwdriver to slide the switch if required.

21. POWER SWITCH: Use this switch to turn the overall system power on or off. Press the switch to the left to turn on the power. Press the switch to the right to put the amp into standby mode. It will not function, but the circuits are still live. To remove AC power, either turn off the AC mains supply, or unplug the power cord from the amplifier and the AC mains supply.

22. VENTILATION: Make sure that the ventilation openings are not obscured in any way. This will allow the flow of cooling air to the power amplifier's heatsinks. See "Fault/Thermal Considerations" on page 18 for more information.

23. SPEAKER OUTPUTS: These individual Speakon / 1/4" TS output jacks supply speaker-level power to the speaker cabinet.

The rated power output of the PF-500 is 300 watts rms into 8 ohms or 500 watts rms into 4 ohms.
The rated power output of the PF-800 is 400 watts rms into 8 ohms or 800 watts rms into 4 ohms.

⚠ The two outputs are wired in parallel, and you can use either one, or use both. Make sure the total speaker impedance load is 4 ohms or greater.

For example, you could connect:

Two 16 ohm speakers (an 8 ohm load),

Two 8 ohm speakers (a 4 ohm load)

or one 4 ohm speaker.

⚠ Use speaker cables with Speakon or 1/4" TS ends to make the connections. Do not use instrument cables as they may overheat.

24. XLR LINE OUT JACK: Typically, you would connect this balanced output to the balanced input of an external mixer, or a recorder. In this way, you do not have to mic the speaker cabinet in order to add it to the main mix, or to record. The output is not affected by the volume control [15].

This output can connect to external power amplifiers, or powered loudspeakers, as long as they have their own input controls to adjust the volume level.

Balanced connections allow long cable runs to be used, as hum and noise pickup in the line is minimized.

PF-500 / PF-800 Rear Panel continued

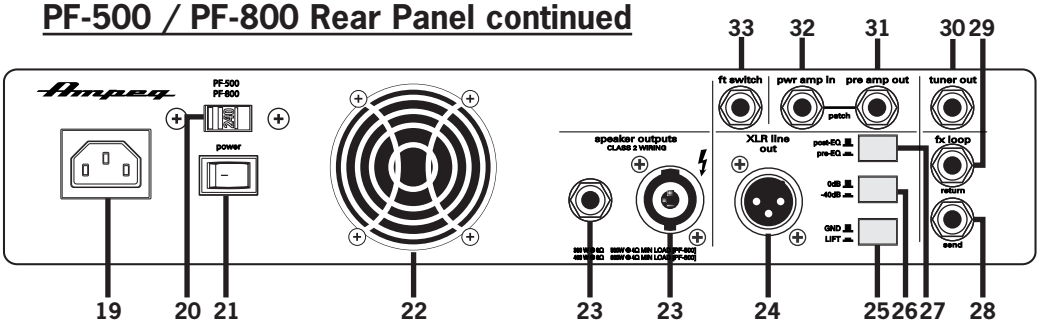

25. GROUND / LIFT: Press this switch in to engage the Ground Lift, if necessary, to help eliminate hum at the XLR jack.

26. 0 dB (line level) / -40 dB (mic level): Press this switch in to apply a –40 dB cut to the signal at the XLR Line Out [24].

27. POST-EQ/PRE-EQ: The signal at the XLR Line Out [24] can be set to either Pre-EQ or Post-EQ with this switch. With the switch in the IN position, the signal at the XLR Line Out is Pre-EQ. This is a direct output not affected by any EQ or boost settings. With the switch in the OUT position, the signal is Post-EQ and is controlled and modified by the tone controls, and the effects loop.

28. FX SEND JACK: Use this 1/4" TS unbalanced output to send a line-level output to an external effects processor (for example). The output here is affected by all controls except the volume.

Use the FX return jack to feed the returned processed signals back into the power amplifier.

29. FX RETURN JACK: Use this 1/4" TS unbalanced input to return the processed line-level output of an external effects processor (for example). The processor could be fed by signals from the FX send [28].

30. TUNER OUT: This jack supplies the only live output when the mute switch is engaged. This allows for silent tuning through an electronic tuner or killing the house send with a monitor mixer send still active.

31. PREAMP OUT: This jack is a direct post master preamp output for use with an external power amp. Connect the external amp's input to this jack using a shielded instrument cable.

32. POWER AMP IN: This jack connects directly to the internal power amp for use with an external preamp. When using an external source, connect the OUTPUT of the source to this jack using a shielded instrument cable to feed the signal into the power amp section. The internal signal is disconnected when a plug is inserted into this jack.

33. FOOTSWITCH: Connect a dual footswitch to this jack for remote Mute and FX On/Off control. On the stereo 1/4" plug, the tip controls Mute and the ring controls FX On/Off. The Mute function is available from either the front panel or the footswitch.

NOTE: A footswitch may be purchased at your local Ampeg Dealer or ordered directly from LOUD Technologies Inc. Be sure to ask for model #AFP2.

PF-500 / PF-800 Block Diagram

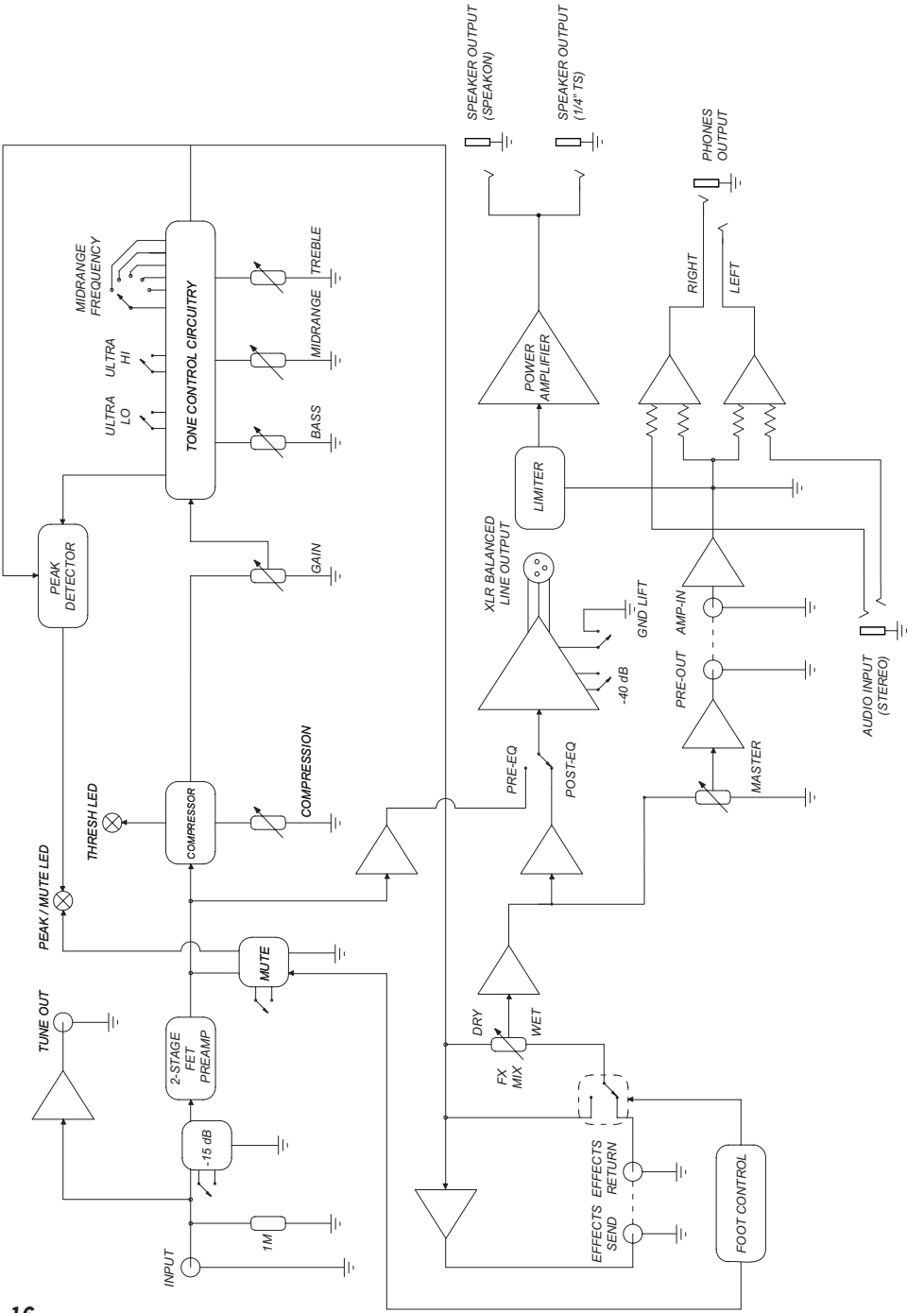

PF-500 / PF-800 TECHNICAL SPECIFICATIONS

Output Power Rating	300 watts rms @ 8 ohms, 3% THD [PF-500] 500 watts rms @ 4 ohms, 3% THD [PF-500] 400 watts rms @ 8 ohms, 3% THD [PF-800] 800 watts rms @ 4 ohms, 3% THD [PF-800]
Signal to Noise Ratio	72 dB (20 Hz–20 kHz, unweighted) [PF-500] 74 dB (20 Hz–20 kHz, unweighted) [PF-800]
Maximum Gain	69 dB, tone controls centered [PF-500] 71 dB, tone controls centered [PF-800]
Tone Controls	Bass: +12/–12 dB @ 40 Hz Midrange: +10/–20 dB @ 220 Hz, 450 Hz, 800 Hz, 1.6 kHz or 3 kHz Treble: +15/–20 dB @ 4 kHz
Power Requirements	~100–120 VAC, 50–60 Hz, 125W [PF-500] ~200–240 VAC, 50–60 Hz, 125W [PF-500] ~100–120 VAC, 50–60 Hz, 200W [PF-800] ~200–240 VAC, 50–60 Hz, 200W [PF-800]
Size (H x W x D)	3.1 in/80 mm x 14.0 in/355 mm x 10.8 in/272 mm [PF-500] 3.1 in/80 mm x 15.0 in/381 mm x 10.8 in/272 mm [PF-800]
Weight	11.0 lb/5.0 kg (approximately) [PF-500] 11.8 lb/5.4 kg (approximately) [PF-800]

The PF-500/PF-800 is covered with sheet metal, so be sure to clean with a dry lint-free cloth. Never spray cleaning agents on the PF-500/PF-800. Avoid abrasive cleansers which would damage the finish.

Ampeg continually develops new products and improves upon existing ones. For this reason, the specifications and information in this manual are subject to change without notice.
"Ampeg" is a registered trademark of LOUD Technologies Inc. All other brand names mentioned are trademarks or registered trademarks of their respective holders and are hereby acknowledged.

Service Information

If you are having a problem with your PF-500 / PF-800, you can go to our website (www.ampeg.com) and click on Support for service information, or call Technical Support at 1-800-898-3211 Monday-Friday during normal business hours, Pacific Time, to receive assistance. If you are outside of the U.S., contact your local distributor for technical support and service.

Fault/Thermal Considerations:

As an amplifier works, it produces heat. The higher the signal level, the louder and hotter it gets. It is important to dissipate the heat as quickly as possible. This results in increased reliability and longevity for the amplifier.

The amplifier module is mounted on a large heatsink, which is cooled by convection where cool air is drawn through its fins, carrying the heat away. In order for this convection cooling to work efficiently, it is important to provide adequate airspace behind and to the side or above the amplifier. When positioning the Portaflex, we recommend leaving at least six inches of air space behind it.

In the unlikely event of the amplifier overheating, a built-in fault switch will activate, muting the signal and lighting the thermal LED. When the amplifier has cooled down to a safe operating temperature, the fault switch resets itself, and the Portaflex resumes normal operation.

If the fault switch activates frequently, try turning down the volume control a notch or two to avoid overheating the amplifier. Be aware that direct sunlight and/or hot stage lights may be the culprit of an amplifier overheating.

Flip-Top Instructions:

So you've made it this far and you are now ready to flip your lid...or at least the amp. We will instruct you on how to do the latter, as we are not in the business of lid-flipping!

It is accomplished in five simple steps:

Step 1: loosen the latches on each side of the cabinet. There are two latches on each side, four total.

Step 2: using the handle, lift the top of the cabinet (amplifier is attached underneath) and rotate it 180˚ clockwise (as indicated in the middle drawing below).

Step 3: set the cabinet top handle-side down on the top of the cabinet. The amplifier should now be on the top, right-side up, with the front of the amp and the front of the cabinet facing the same direction.

Step 4: line up and lock all four latches.

Step 5: rock out like there is no tomorrow!

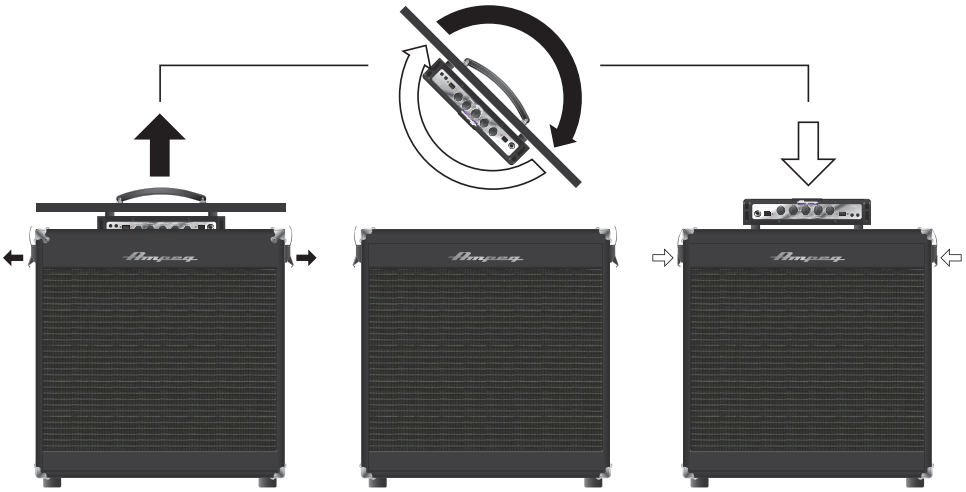

www.ampeg.com
©2012 LOUD Technologies Inc.
16220 Wood-Red Road NE • Woodinville, WA 98072
Part No. SW0855 Rev. F 10/12

Ampeg

PF-350

PF-500

& PF-800

Bass Guitar Amplifiers

Owner's Manual