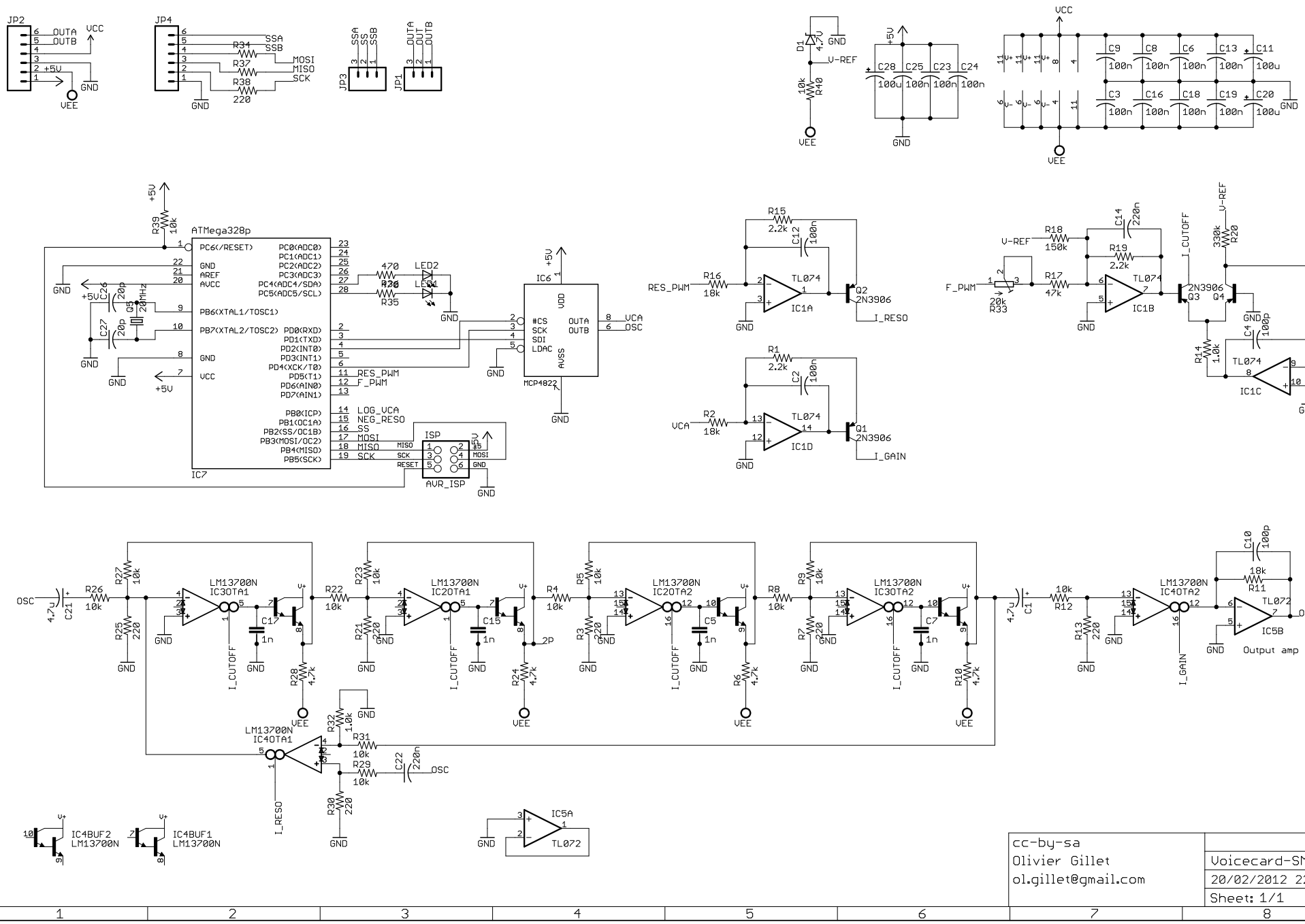
JP2
JP4
JP3
JP1
VCC
VEE
GND
+5V
D1
4.7V
V-REF
ATMega328p
IC7
MCP4822
IC6
ISP
AVR_ISP
LED2
LED1
IC1A
IC1B
IC1C
IC1D
TL074
Q1
Q2
Q3
Q4
2N3906
RES_PWM
F_PWM
VCA
OSC
I_RESO
I_GAIN
I_CUTOFF
LM13700N
IC30TA1
IC20TA1
IC20TA2
IC30TA2
IC40TA2
IC40TA1
IC4BUF2
IC4BUF1
IC5A
IC5B
TL072
Output amp
cc-by-sa
Olivier Gillet
ol.gillet@gmail.com
Voicecard-SMR-v04
20/02/2012 22:57
Sheet: 1/1