MEAGHER ELECTRONICS CO.
177 Webster St. – FR 2-0425
Monterey, California

ALTEC

9440A POWER AMPLIFIER

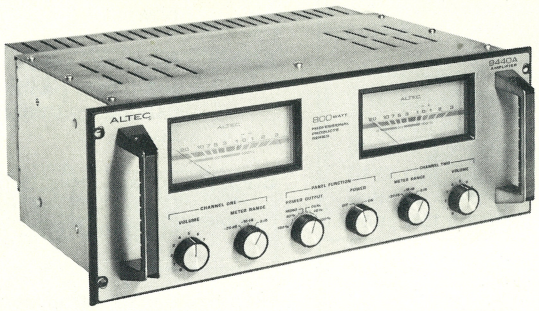

OPERATING INSTRUCTIONS

FRONT PANEL CONTROLS AND FEATURES

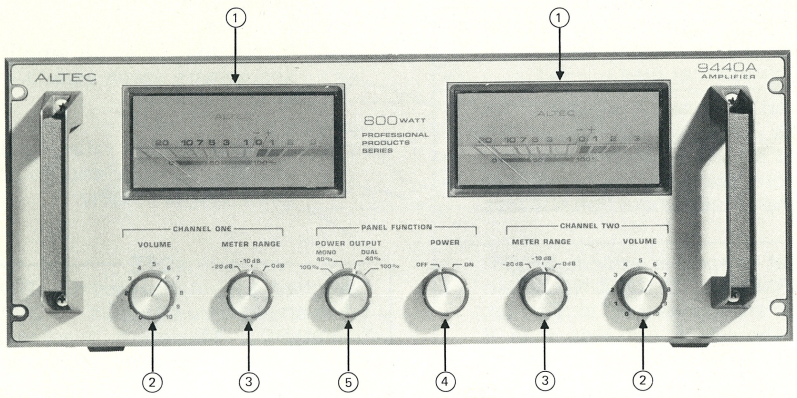

1	VU meters	Display output for channels 1 and 2. Meters illuminate when power is on.
2	VOLUME controls	Adjust gain of channels 1 and 2. Rotate clockwise to increase gain.
3	METER RANGE switches	Select full scale range of VU meter. Selectable ranges are 0 dB, – 10 dB and – 20 dB. Maximum output of each range (0 dB, – 10 dB and – 20 dB) coincides with zero dB on meter scale.
4	POWER switch	Applies primary power to amplifier. VU meters illuminate when switch is turned to ON.
5	POWER OUTPUT switch	In DUAL position, channel 1 and channel 2 inputs are amplified and applied to CH 1 and CH 2 OUT jacks, for separate sound reproduction of each channel. In MONO position, channels are bridged at BAL MONO OUT jacks for 800-watt floating capability, or dual 200-watt capability through individual outputs; signal is provided from channel 1 input. Channel 2 input is removed during MONO operation. When fan accessories are not used, and amplifier is used for continuous service under heavy load, turn switch to 40% position to prevent amplifier from cycling due to excessive heat. In all other applications, use 100% position for full power output.

INSTALLATION

RACK MOUNTING

The 9440A amplifier is designed for mounting in a standard 19-inch equipment rack, requiring a vertical rack space of 7 inches. Use four 10-32 x ½" screws to secure the front panel against the rack.

VENTILATION

The 9440A must be adequately ventilated to prevent excessive temperature rise of output transistors. An inch or two of space should be left *behind, above and below* the 9440A to ensure adequate cooling. Four feet raise the amplifier from a flat surface to allow free passage of air beneath the chassis.

CAUTION

Do not block ventilation slots in the top of the chassis, the bottom of the chassis, or the heat sink shroud at the back of the amplifier. Be sure free circulation of air is not restricted by other equipment, walls, curtains or furniture.

The 9440A should not be placed too close to other heat-generating equipment or in areas where ambient temperature exceeds 55°C (133°F).

If the 9440A is mounted in an equipment rack or cabinet with other heat-producing equipment mounted above and/or below, space must be provided between the units to prevent excessive temperature rise. The ALTEC 10399 1¾" Perforated Panel is recommended for this purpose.

When several amplifiers or other heat-producing units are installed in a single rack or cabinet, acceptable air temperature may be in doubt. To determine temperature conditions, operate the system until temperature stabilizes, then measure air temperature with a bulb-type thermometer held at the bottom of the uppermost amplifier. Do not let the thermometer bulb touch metal because the metal may be hotter than the ambient air. If air temperature exceeds 55°C (133°F), the equipment should be spaced farther apart or a blower should be installed to ventilate the cabinet.

Specifications and components subject to change without notice. Overall performance will be maintained or improved.

ALTEC
SOUND PRODUCTS DIVISION
1515 S. Manchester Ave., Anaheim, Calif. 92803

42-02-044755-04
LITHO IN U.S.A. CP-276-1K

REAR PANEL CONNECTIONS AND FEATURES

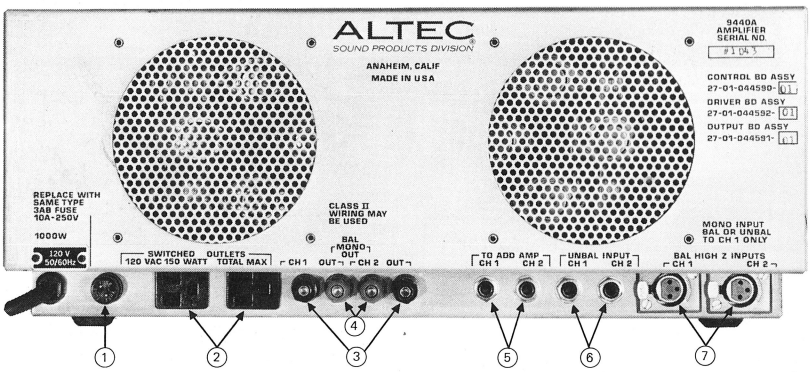

1	Fuse	Protects amplifier from excessive current drain. Replace only with same type 10-ampere fuse. Refer to qualified service personnel if fuse blows repeatedly. A 15-ampere fuse may be used for test purposes only.
2	SWITCHED AC OUTLETS	Provide auxiliary line voltage, turned on by POWER switch on front panel. Total current from both outlets limited to 1.5A by internal fuse.
3	CH 1 OUT CH 2 OUT speaker terminals	Connect channel 1 and channel 2 speakers for corresponding channels. Two pair of standard GR jacks have red (+) and black (−) polarity designations. When two or more speakers are connected in parallel, combined impedance should be not less than 4 ohms.
4	BAL MONO OUT speaker terminals	Connect balanced output to speaker system. NEVER CONNECT EITHER TERMINAL TO GROUND. When two or more speakers are connected in parallel, combined impedance should be not less than 8 ohms. Operate POWER OUTPUT switch in MONO mode.
5	TO ADD AMP jacks	Accept cables to connect another 9440A amplifier in parallel.
6	UNBAL INPUT jacks	Accept cables from high-impedance (nominal 15KΩ) microphones, AM/FM tuners, tape recorders, etc.
7	BAL HIGH Z INPUTS receptacles	Accept cables from high-impedance (nominal 15KΩ) microphones, AM/FM tuners, tape recorders, etc. Two transformer-isolated, balanced input channels have XLR3-31 type connectors.

If the 9440A amplifier becomes too warm, due to continuous use at high output, two accessory fans should be installed on the rear of the heat sink shroud. Each fan should produce at least 30 cubic feet per minute at a static pressure of 0.04 inch of water. Fans provided in the ALTEC Model 105878 Fan Kit meet this requirement.

ELECTRICAL

120-Volt, 50/60 Hz Power Connections

Equipment supplied for domestic use is provided with the power transformer primary strapped for 120 volts, as shown in Figure 1. The power input nameplate, adjacent to the power cord on the chassis, is mounted to show the appropriate side specifying connections. Verify that line voltage is in accordance with the voltage rating *before* connecting primary power.

240-Volt, 50/60 Hz Power Connections

Export equipment is provided with the power transformer primary strapped for 240 volts, as shown in Figure 1. The power input nameplate, adjacent to the power cord on the chassis, is mounted to show the appropriate side specifying connections.

For a 9440A previously wired for 120 volts ac primary power, use the following procedure to change wiring for 240 volts ac operation. Refer line voltage change to qualified service personnel only.

Step 1. Turn POWER switch to OFF.

Step 2. Remove power cord from primary power outlet.

Step 3. Remove seven screws securing top cover. Lift off top cover to expose transformer terminal board.

Step 4. Locate strap connecting terminals C and F (see Figure 1). Remove strap and store for possible later use.

Step 5. Locate strap connecting terminals E and K. Remove spade connector from terminal K and connect it to terminal F. This strap now connects terminals E and F as shown in Figure 1.

Step 6. Install top cover on amplifier and secure with seven screws removed in Step 3.

Step 7. Remove voltage rating plate from chassis; reverse and reinstall to show 240-volt rating.

NOTE

Switched ac outlets provide 120V ac when amplifier is strapped for 240V ac operation. Maximum acceptable power drain remains 150 watts combined.

Input Connections — Unbalanced

Connections to UNBAL INPUT for channels 1 and 2 are made with two-wire cables terminated with standard ¼" diameter phone plugs.

The UNBAL INPUT connects preamplifiers, mixers, etc., to channels 1 and 2 (see Figure 2). Nominal input level should be approximately 0.5 volt rms. If the 9440A is used in a mono mode, use the channel 1 (CH 1) jack only; connection of an input to channel 2 (CH 2), with no connection to channel 1, will result in no output.

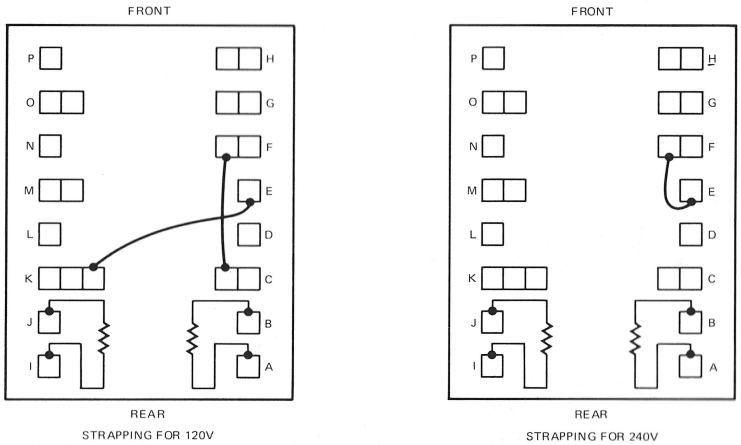

Figure 1. Strapping of Power Transformer for 120V and 240V Power

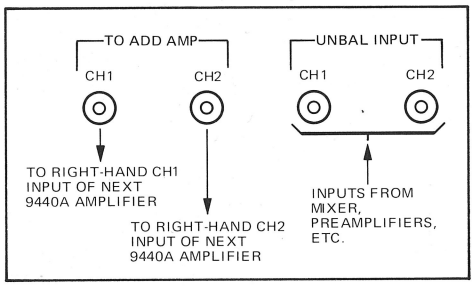

Figure 2. Unbalanced High-Impedance Input Connections

NOTE

The UNBAL INPUT overrides the BAL HIGH Z INPUTS when cable connections are made.

The TO ADD AMP jacks are in parallel with the respective CH 1 and CH 2 input jacks. These jacks are used to connect 9440A amplifiers in multiple configurations. Multiple amplifiers can be connected when the first amplifier receives input to either the UNBAL INPUT or the BAL HIGH Z INPUTS. Figure 3 shows a typical multiple configuration of 9440A amplifiers.

Unbalanced output at the TO ADD AMP jacks may be employed from a balanced input at the XLR3-31 jacks, as shown in Figure 4.

NOTE

The input impedance presented to the program source is equal to 15K divided by the total number of amplifiers operating from that source. The volume control of the first amplifier does not control the other amplifiers.

Input Connections — Balanced

Connections to BAL HIGH Z INPUTS for channels 1 and 2 are made with shielded two-wire cables terminated with XLR3-type plugs. Wiring of these plugs is shown in Figure 5.

Inputs may be from mixers, preamplifiers, tuners, phono or other high-level line sources. Nominal input level should be approximately 0.5 volt rms. If the 9440A is used in a mono mode, use channel 1 (CH1) jack only; connection of an input to channel 2 (CH 2), with no connection to channel 1, will result in no output.

NOTE

Inputs connected to the UNBAL INPUT override inputs to BAL HIGH Z INPUTS.

One plug-in ALTEC 15335A Line Transformer accessory is required for each of the two channels for BAL HIGH Z INPUTS. The transformer accessories are plugged into the corresponding receptacles within the chassis (see Figure 5). Refer transformer installation to qualified service personnel only.

Speaker Connections

Connections to channel 1 (CH 1 OUT) and channel 2 (CH 2 OUT) speaker outputs are made with two-wire cables. Both red (+) speaker output jacks are isolated from chassis ground. *Do not* place either of these jacks in a circuit to chassis ground. Combined impedance of the speaker system should be not less than 4 ohms for each of the two speaker outputs (see Figure 6).

Connections to BAL MONO OUT combine the two channels into one output. NEVER CONNECT EITHER RED OUTPUT TERMINAL TO CHASSIS GROUND. Combined impedance of the speaker system should be not less than 8 ohms (see Figure 6).

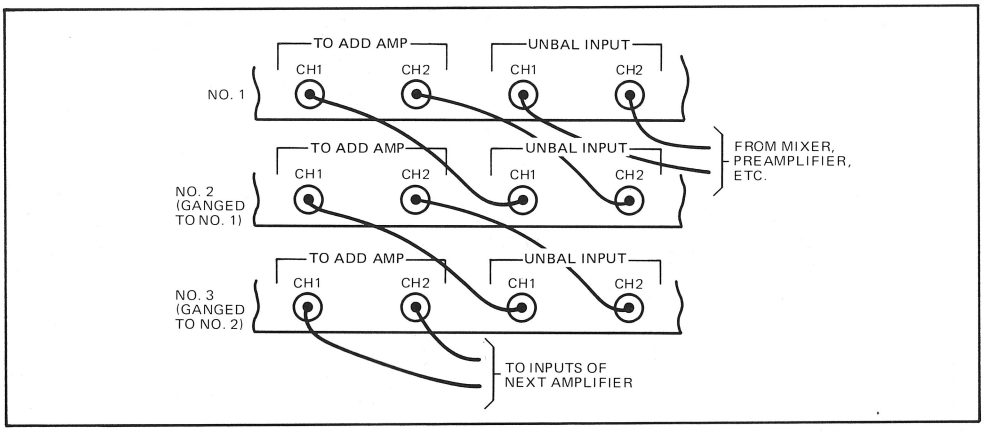

Figure 3. 9440A Amplifiers Connected in Multiple

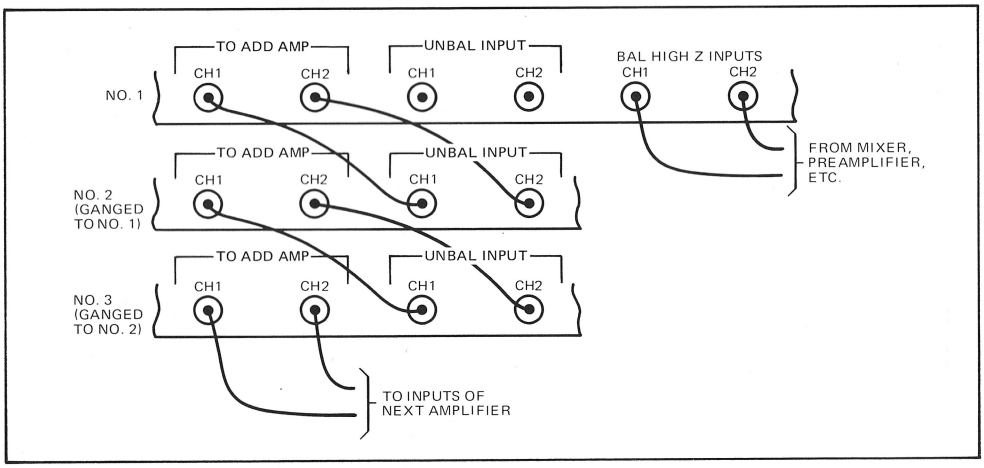

Figure 4. Application of Unbalanced Output from Balanced Input

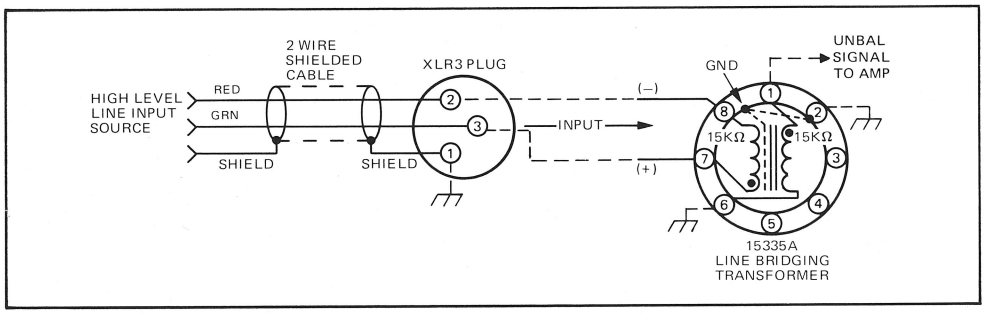

Figure 5. Balanced Input Conections to 9440A

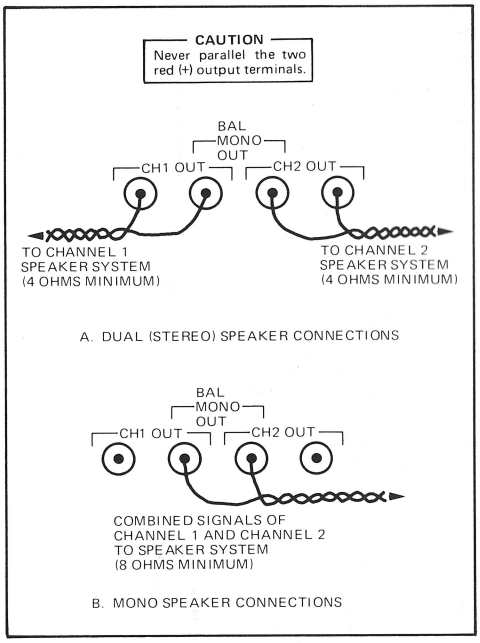

Figure 6. Mono and Dual Speaker Connections

BLOCK DIAGRAM

A system block diagram of the 9440A is shown in Figure 8.

SERVICE

This service information is for the use of authorized warranty stations (dealers) only. Service must be performed by an ALTEC Qualified Service Representative. For factory service, ship the 9440A prepaid to:

ALTEC Customer Service
131 West Katella Avenue
Anaheim, California 92803

For additional information or technical assistance, call (714) 774-2900 or Telex 65-5415.

NOTICE

REPAIR PERFORMED BY OTHER THAN AUTHORIZED WARRANTY STATIONS (DEALERS) OR OTHER QUALIFIED PERSONNEL SHALL VOID THE WARRANTY PERIOD OF THIS UNIT. TO AVOID LOSS OF WARRANTY, SEE YOUR NEAREST ALTEC AUTHORIZED DEALER OR CALL ALTEC CUSTOMER SERVICE DIRECTLY AT (714) 774-2900, OR WRITE:
Customer Service
ALTEC
131 West Katella Avenue
Anaheim, California 92803

Access

The top cover, heat sink assembly, and front panel assembly can be removed for access to corresponding areas of the chassis. Six screws secure the top cover to the chassis.

To remove the heat sink assembly, first take off the heat sink shroud, which is attached to the heat sink with four screws. Remove the four screws which secure the heat sink to the chassis. The heat sink assembly can then be laid back to the extent permitted by the wiring; use care not to bind the wiring at the sides of the chassis.

The four screws which fasten the handles also secure the front panel assembly to the chassis. Remove these four screws and lay back the front panel assembly to the extent permitted by the wiring. Use care to prevent binding the wires between the side supports of the chassis.

Adjustment of Output Null and Bias Potentiometers

Step 1. Turn VOLUME control fully counterclockwise, METER RANGE switch to 0 dB, and POWER OUTPUT switch to DUAL 100%.

Step 2. Turn POWER switch to ON and allow a 5-minute thermal stabilization period.

Step 3. Remove top cover from chassis for access to driver circuit boards.

Step 4. Adjust Output Null potentiometer R30 (vertically oriented) on channel 1 (CH-1) driver circuit board for an output of ±3 millivolts dc at CH-1 output terminals. Adjust R30 of channel 2 by similar procedure.

Step 5a. Insert a clamp-on dc milliammeter over blue wire from terminal E21 of output circuit board of channel 1 (CH-1) (see Figure 7). Set Bias Adjust potentiometer R22 (horizontally oriented) on CH-1 driver circuit board for a current of 75 ±5 mA dc. Adjust R22 of channel 2 by similar procedure, inserting clamp-on dc milliammeter over red wire from terminal E20′ of CH-2 output circuit board.

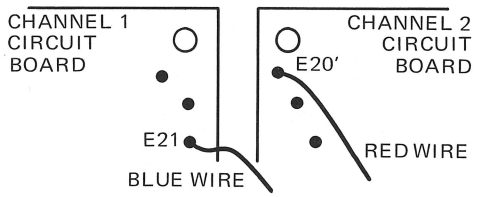

Figure 7. Output Wiring for Use in Setting Bias Current

Step 5b. If a clamp-on type dc milliammeter is not available, a standard dc milliammeter may be inserted in series with power leads to CH-1 and CH-2 output circuit boards:

(a) Turn off power to 9440A and locate two wires leading from terminal E5 of capacitor C2 to terminals E20 or E20′ on output circuit boards.

(b) Unsolder these two leads from terminal E5. Identify by continuity check to which output board each wire connects.

(c) Insert dc milliammeter in series with one lead, reconnecting the other lead to terminal E5. Turn on power and allow 1 minute for thermal stabilization.

(d) Set Bias Adjust potentiometer R22 (horizontally oriented) of corresponding channel for a current of 75 ±5 mA dc.

(e) Repeat steps (3) and (4) to adjust R22 of other channel, inserting dc milliammeter in series with other lead. Always turn off power when connecting or disconnecting dc milliammeter.

(f) Shut off power and resolder both leads securely to terminal E5.

Step 6. Install top cover on chassis.

Fuse Replacement

If replacement of any fuse is required, determine and correct any cause of failure before installing another fuse. Install an identical fuse. See Parts List.

The primary power fuse is located on the rear of the chassis. See "Rear Panel Connections and Features" of Operating Instructions.

A pigtail 1.5-ampere fuse protects the power transformer against excessive power drain from the SWITCHED OUTLETS at the rear of the chassis. Maximum acceptable power drain is 150 watts for both outlets combined. For access to the fuse, located on the top of the power transformer, remove the top cover from the chassis.

Lamp Replacement

Four lamps, located behind each VU meter, are accessible after removing the top cover from the chassis. Remove the failed lamp with long-nose pliers and install an identical lamp. See Parts List.

Removal of Printed Circuit Boards

CAUTION

Do not warp, bend or twist the circuit boards during handling, or conductors may fracture or open.

When reconnecting cables to the circuit boards, be sure ends of the plastic connectors are flush with the ends of the circuit board connectors, or individual pin plugs will not mate with the proper pin receptacles. Damage as a result of wrong connection is not covered by warranty.

Driver Circuit Boards

Two identical driver circuit boards are installed on each side of the chassis, and are accessible after removing the top cover from the chassis. Grasp the connector (not the wires) and pull off with a rocking motion. The board may then be freed by removing the four screws which fasten it to the side of the chassis.

Output Circuit Boards

Two identical output circuit boards are installed on the heat sink. Remove the top cover and the heat sink shroud from the chassis. Remove the four screws which secure the heat sink to the chassis; lay the heat sink assembly back to the extent permitted by the wiring to gain access to the front side of the board. For access to the back side of the board, and to resistors associated with the driver/output transistors, first remove applicable 14 transistors (channel 1 or channel 2 board) from the heat sink. Then remove the two screws securing the board to the heat sink, and the screw which attaches the connector strap to the board. The board may then be laid back from the heat sink to the extent permitted by the wiring. Do not unsolder wires from the board unless absolutely necessary.

Control Circuit Board

Remove the top cover from the chassis. Disconnect Plug P1 from each driver circuit board at J1. Disconnect three plugs from harness wiring from control circuit board. Remove two screws from each handle on the front panel. Carefully free each side of the panel assembly from the chassis, ensuring that the wire leads do not bind against the side of the chassis. The front panel assembly may be completely separated from the chassis by passing the loose cable connectors through the openings in the chassis.

To separate the circuit board from the front panel, first remove all knobs (except POWER switch) by loosening the set

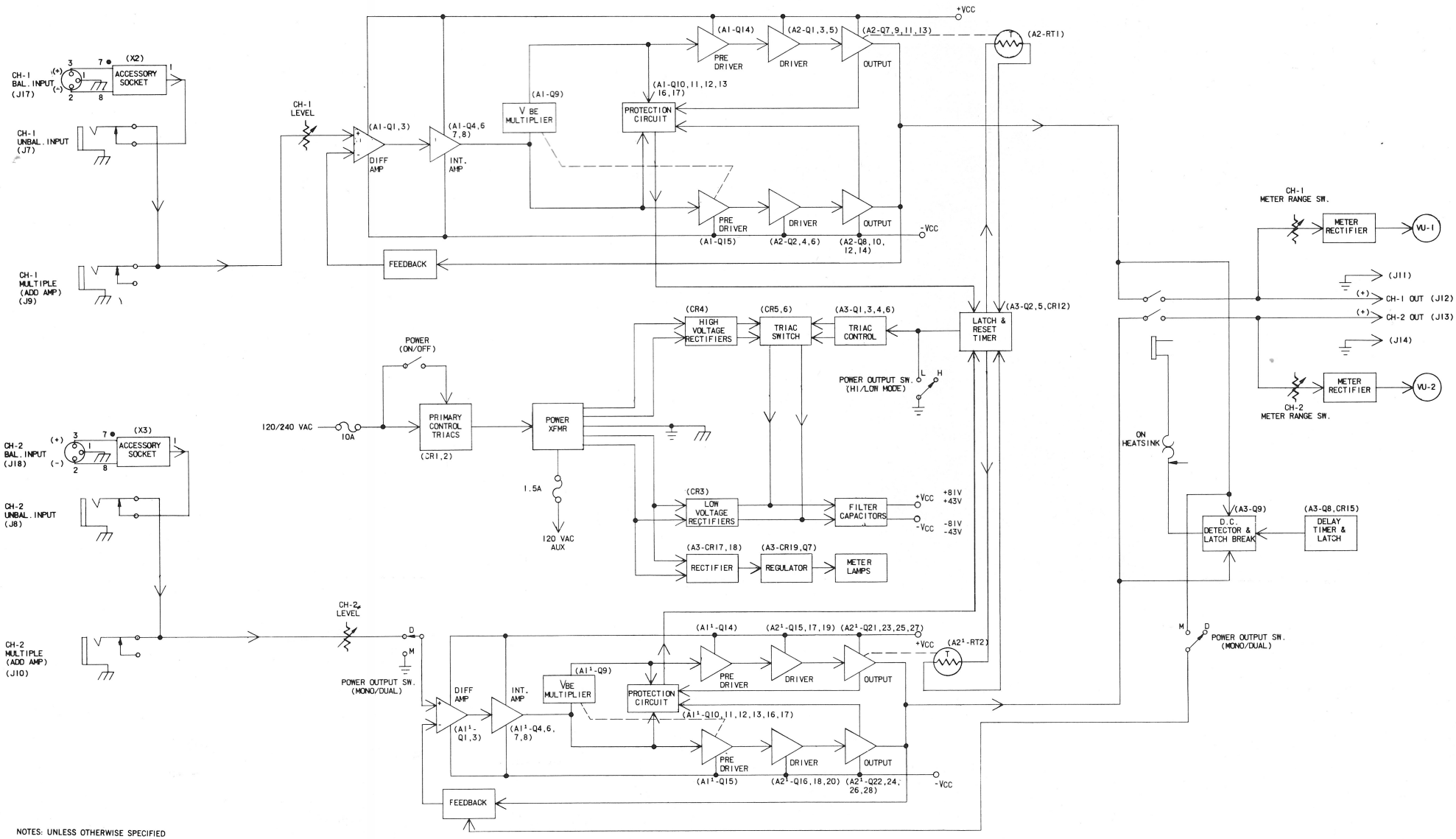

Figure 8. 9440A Power Amplifier Block Diagram (6D714)

screws with a 3/32" allen wrench. Remove the four nuts on the meter posts. Remove the three screws securing the board to the standoffs; be sure to retain the fiber washers with the screws. Remove the two screws securing the switch bracket to the standoffs (insert screwdriver through holes in the circuit board). The control circuit board now may be freed from the front panel.

If it is necessary to remove the switch bracket from the circuit board, first remove all shaft nuts from the switches and controls. Remove the four screws, washers, and nuts that secure the bracket to the board; be sure to retain the fiber washers with the screws.

Power Output Transistors

Fourteen power output transistors for each channel are located on the rear of the heat sink, as shown in Figure 9. Faulty transistors can be located by using a low-power ohmmeter, such as the Triplett Model 603 FET-VOM, to check the transistor groups given in Table I. Open circuit voltage of the ohmmeter should be less than the 0.6V dc that turns on a silicon PN junction.

With power off to the 9440A, disconnect plug P2 from the driver circuit board. Check the junctions of the transistor groups at the appropriate terminals of plug P2, in the order presented by Table I.

Once a defective indication is found for a given transistor group, remove one transistor at a time from the group for individual check.

When installing transistors on the heat sink, check that the following conditions are met:

1. Mica insulator is not damaged. If damaged, use new insulator.
2. No grit or metal particles are lodged between transistor and heat sink.
3. Both sides of mica insulator are covered with silicone grease or fluid.
4. Mounting screws of transistor are tight (threads not stripped in transistor socket).

An optional testing device is a PN junction-insensitive continuity checker, easily assembled from common components. A schematic for the checker is given in Figure 10. The checker sounds a tone upon detecing a short circuit or low-resistance path. Since open-circuit voltage of the checker is 200 mV, and short-circuit current is 10 mA or less, any solid state device can be tested for shorts without damage, and without turning on an associated junction.

Table I. Driver/Output Transistor Connections

Plug P2 Terminals	Junction	Channel 1 Transistors	Channel 2 Transistors
1 – 2	EB	Q15, 17, 19	Q1, 3, 5
8 – 9	EB	Q16, 18, 20	Q2, 4, 6
2 – 5	BC	Q15, 17, 19	Q1, 3, 5
5 – 8	BC	Q16, 18, 20	Q2, 4, 6
1 – 5	EC	Q21, 23, 25, 27, CR1	Q7, 9, 11, 13, CR1
5 – 9	EC	Q22, 24, 26, 28, CR2	Q8, 10, 12, 14, CR2

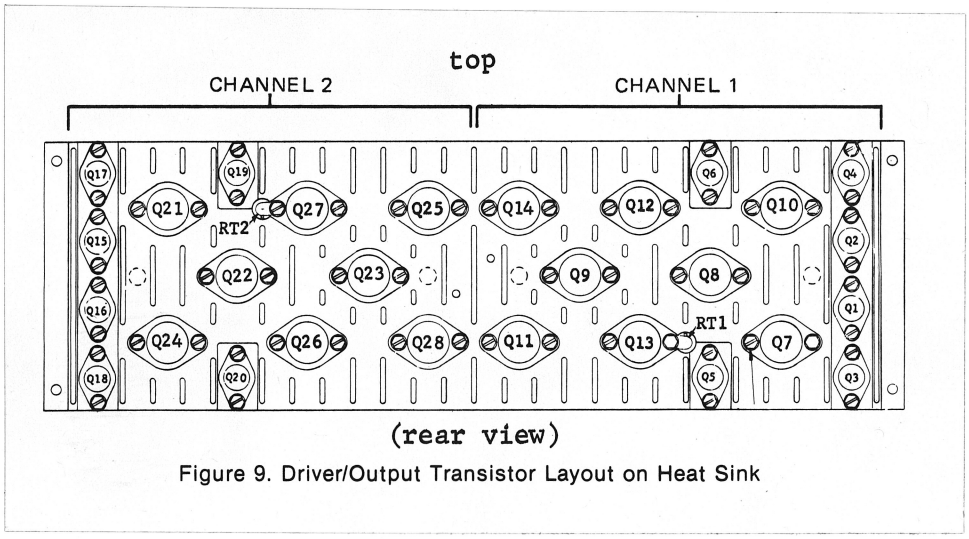

Figure 9. Driver/Output Transistor Layout on Heat Sink

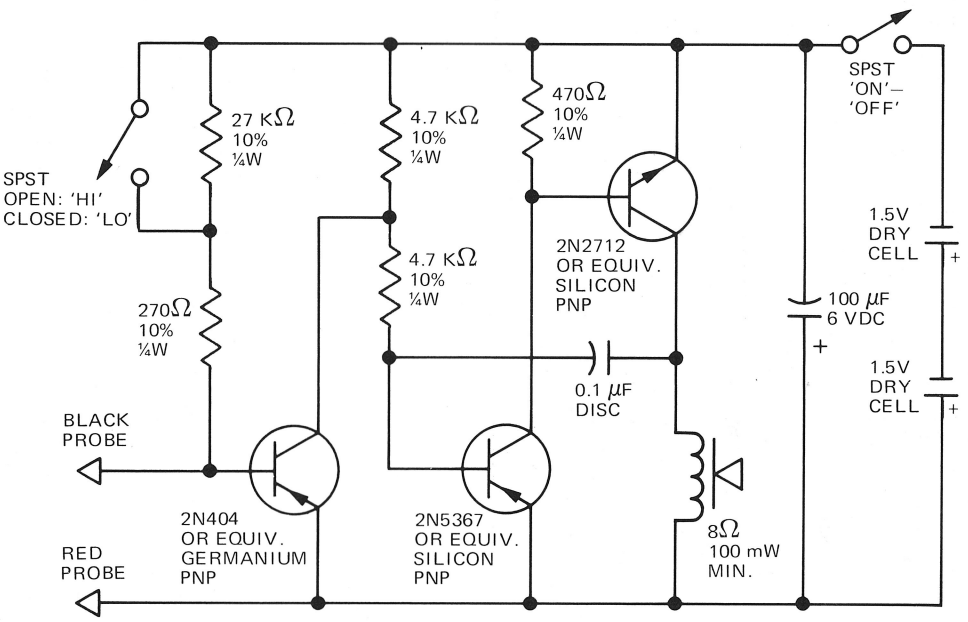

Figure 10. Schematic for PN Junction-insensitive Continuity Checker

PARTS LIST

MAIN CHASSIS

Reference Designator	Ordering Number	Name and Description
—	24-04-044732-02	Knob, control, 1-1/8" dia w/set screw
A1	27-01-044592-05	PCB assy., driver
A2	27-01-044591-05	PCB assy., power output
A3	27-01-044590-03	PCB assy., control
C1, 2	15-01-120228-01	Cap., 9800 μF, 100V
CR1, 2, 5, 6	48-04-120227-01	Triac, 15A, 200V
CR3, 4	48-02-120427-01	Rectifier, bridge, 12A, 200 PIV
F1	51-04-105890-01	Fuse, 10A, 250V, 3AB
F2	51-04-120411-01	Fuse, 1.5A slo-blo, pigtail
K1	45-01-044782-01	Relay, 2C, mag blowout, 24V dc
Q1, 3, 5,15, 17, 19	48-03-120157-01	Transistor, SJ4117, selected
Q2, 4, 6, 16, 18, 20	48-03-120226-01	Transistor, SJ4118, selected
Q7, 8, 9, 10, 11, 12, 13, 14, 21, 22, 23, 24, 25, 26, 27, 28	48-03-120392-02	Transistor, 2N6259, selected
R1, 2	47-01-102151-01	Resistor, 100Ω ± 10%, ¼ W
RT1, 2	47-09-120248-01	Resistor, temp. sensing (moxie)
S1	53-01-120484-02	Switch, thermo, open 210°F, close 180°F
S1A, 1B	26-03-044684-01	Switch, power
T1	56-08-007552-01	Transformer, power
VU1, 2	29-01-044604-07	Meter, VU

DRIVER PCB ASSEMBLY

Reference Designator	Ordering Number	Name and Description
C1	15-01-107221-01	Cap., 5 μF, 25V
C2	15-02-107453-01	Cap., 150 pF ± 10%, 100V
C3	15-01-119335-02	Cap., 50 μF, 16V
C4	15-02-100012-01	Cap., 20 pF ± 10%, 500V
C5	15-01-100204-01	Cap., 10 μF, 25V
C6, 17, 21	15-02-100304-01	Cap., 0.001 μF ± 10%, 100V
C7	15-02-107455-01	Cap., 47 pF ± 10%, 100V
C8, 9, 20	15-06-108173-01	Cap., 0.47 μF ± 20%, 100V
C10, 11	15-01-102575-01	Cap., 10μF, 100V
C12, 15, 16, 19	15-02-100307-01	Cap., 0.01 μF ± 20%, 100V
C13, 14	15-02-100110-01	Cap., 0.1 μF, 100V
C18	15-02-107047-01	Cap., 0.0033 μF ± 20%, 100V
C22	15-02-100036-01	Cap., 560 pF ± 10%, 500V
CR1, 2, 6	48-01-100850-02	Diode, Zener, 6.2V ± 5%, 1W
CR3, 4, 5, 9	48-01-100881-02	Diode, STB 567
CR7, 8	48-01-109275-01	Diode, 1N746
CR10, 11, 17, 18, 19	48-01-107017-01	Diode, 1N456A
CR12, 13	48-01-100876-01	Diode, 1N270
CR14	not used	
CR15, 16	48-02-042787-01	Rectifier, silicon, 1A, 400 PIV
Q1, 3	48-03-109714-01	Transistor, TZ81
Q2, 4	48-03-120245-01	Transistor, 2N5550
Q5, 12	48-03-041440-02	Transistor, 2N3906, selected
Q6, 13, 16	48-03-120234-01	Transistor, MPS A93, selected
Q7	48-03-120160-01	Transistor, MPS U60, selected
Q8	48-03-120159-01	Transistor, MPS U10, selected
Q9	48-03-120235-01	Transistor, TZ255 w/heat sink
Q10, 17	48-03-120233-01	Transistor, MPS A43, selected
Q11	48-03-101098-03	Transistor, 2N2712, selected
Q14	48-03-120226-01	Transistor, SJ 4118, selected
Q15	48-03-120157-01	Transistor, SJ 4117, selected
R1, 12, 16	47-01-102163-01	Res., 1KΩ ± 10%, ¼ W
R2, 52	47-01-102182-01	Res., 39KΩ ± 10%, ¼ W
R3, 17, 49	47-01-102151-01	Res., 100Ω ± 10%, ¼ W
R4	47-01-102099-01	Res., 7.5KΩ ± 5%, ¼ W
R5, 10, 11	47-01-102179-01	Res., 22KΩ ± 10%, ¼ W
R6	47-01-102181-01	Res., 33KΩ ± 10%, ¼ W
R7, 9	47-03-109430-01	Res., 40.2KΩ ± 1%, ¼ W
R8	47-03-109123-01	Res., 511Ω ± 1%, ¼ W
R13	47-01-120236-01	Res., 6.8KΩ ± 10%, 2W
R14	47-01-102167-01	Res., 2.2KΩ ± 10%, ¼ W
R15	47-01-102187-01	Res., 100KΩ ± 10%, ¼ W
R18	47-01-102045-01	Res., 43Ω ± 5%, ¼ W
R19, 45, 48	47-01-102149-01	Res., 68Ω ± 10%, ¼ W
R20	47-01-102161-01	Res., 680Ω ± 10%, ¼ W
R21	47-01-102159-01	Res., 470Ω ± 10%, ¼ W
R22, 30	47-06-120240-01	Pot., 1KΩ ± 30%
R23	47-01-102156-01	Res., 270Ω ± 10%, ¼ W
R24, 25, 46, 47, 56	47-01-102140-01	Res., 10Ω ± 10%, ¼ W
R26, 27	47-01-102371-01	Res., 22KΩ ± 10%, ½ W
R28, 29	47-01-102165-01	Res., 1.5KΩ ± 10%, ¼ W
R31, 41	47-01-102180-01	Res., 27KΩ ± 10%, ¼ W
R32, 55	47-01-102184-01	Res., 56KΩ ± 10%, ¼ W
R33, 54	47-01-102186-01	Res., 82KΩ ± 10%, ¼ W
R34, 38	47-01-102044-01	Res., 39Ω ± 5%, ¼ W
R35, 37	47-01-102061-01	Res., 200Ω ± 5%, ¼ W
R36	47-01-102102-01	Res., 10KΩ ± 10%, ¼ W
R39, 40	47-01-102095-01	Res., 5.1KΩ ± 5%, ¼ W
R42, 43	47-01-102062-01	Res., 220Ω ± 5%, ¼ W
R44	47-01-102147-01	Res., 47Ω ± 10%, ¼ W
R50, 51	47-01-102154-01	Res., 180Ω ± 10%, ¼ W
R53	47-01-102189-01	Res., 150KΩ ± 10%, ¼ W

POWER OUTPUT PCB ASSEMBLY

Reference Designator	Ordering Number	Name and Description
CR1, 2	48-02-042787-01	Rectifier, silicon, 1A, 400 PIV
L1	56-01-018207-01	Choke, 5 μH, air core
R1, 3, 4, 5, 6, 7	47-01-102318-01	Res., 1Ω ± 10%, ½W
R2, 8	47-01-102925-01	Res., 4.7Ω ± 10%, 1W
R9, 10, 11, 12, 13, 14, 15, 16, 17	47-01-120244-01	Res., 0.5Ω ± 5%, 3W
R18, 19	47-01-120434-01	Res., 12Ω ± 10%, 2W
R20	47-02-112166-01	Res., 5Ω ± 10%, 5W

CONTROL PCB ASSEMBLY

Reference Designator	Ordering Number	Name and Description
C1, 6	15-06-108173-01	Cap., 0.47 μF, ±20%, 100V
C2	15-01-107452-01	Cap., 10 μF, 50V
C3	15-01-119381-01	Cap., 200 μF, 25V
C4	15-02-113220-01	Cap., 0.01 μF ±20%, 100V
C5	15-01-107500-01	Cap., 100 μF, 50V
C7, 8	15-01-119229-01	Cap., 16 μF ±10%, 50V NP
C9	15-02-100109-01	Cap., 0.1 μF ±20%, 100V
CR1, 23	48-01-100858-01	Diode, Zener, 12V ±5%, 2W
CR2, 3, 4, 5, 7, 8, 9, 10	48-01-100876-01	Diode, germanium, 1N270
CR6, 11	48-01-107017-01	Diode, 1N456A
CR12, 15	48-02-120246-01	SCR, C103YY, 0.8A, 60V
CR13	48-01-100881-01	Stabistor, STB-567
CR14, 16, 17, 18, 20, 21, 22	48-02-042787-01	Rectifier, 1A, 400 PIV
CR19	48-01-108575-01	Diode, Zener, 30V ±5%, 2W
DS1, 2, 3, 4, 5, 6, 7, 8	39-01-107475-02	Lamp, midg. flange, 28V, 40 mA
Q1	48-03-107448-03	Transistor, 2N5322, selected
Q2	48-03-041440-02	Transistor, 2N3906, selected
Q3	48-03-120233-01	Transistor, MPS A43
Q4	48-03-120234-01	Transistor, MPS A93
Q5	48-03-113716-01	Transistor, unijunction, 2N2646
Q6	48-03-107447-03	Transistor, 2N5320, selected
Q7	48-03-041840-02	Transistor, 2N3055, selected
Q8	48-03-119140-02	Transistor, 2N5308, selected
Q9	48-03-101098-03	Transistor, 2N2712, selected
R1, 8	47-01-102065-01	Res., 300Ω ±5%, ¼W
R2, 4, 9, 11	47-01-102090-01	Res., 3.3KΩ ±5%, ¼W
R3, 10	47-01-102078-01	Res., 1KΩ ±5%, ¼W
R5, 12	47-01-102066-01	Res., 330Ω ±5%, ¼W
R6, 13	47-01-102091-01	Res., 3.6KΩ ±5%, ¼W
R7, 14	47-01-102058-01	Res., 150Ω ±5%, ¼W
R15, 16, 20, 22, 27, 29, 37	47-01-102163-01	Res., 1KΩ ±10%, ¼W
R17, 28	47-01-102625-01	Res., 10KΩ ±10%, 1W
R18, 38	47-01-102181-01	Res., 33KΩ ±10%, ¼W
R19	47-01-104512-01	Res., 3.3KΩ ±10%, 2W
R21, 40	47-01-102167-01	Res., 2.2KΩ ±10%, ¼W
R23, 44, 45	47-01-102175-01	Res., 10KΩ ±10%, ¼W
R24	47-01-100482-01	Res., 1MΩ ±10%, ¼W
R25, 26	47-01-102151-01	Res., 100Ω ±10%, ¼W
R30	47-01-102184-01	Res., 56KΩ ±10%, ¼W
R31	47-01-102147-01	Res., 47Ω ±10%, ¼W
R33	47-01-102172-01	Res., 5.6KΩ ±10%, ¼W
R34	47-01-102893-01	Res., 100Ω ±10%, 1W
R35, 36	47-06-120422-02	Pot., 20KΩ 30% Audio
R39, 41, 42, 43	47-01-102185-01	Res., 68KΩ ±10%, ¼W
S1, 2	51-01-044589-04	Switch, rotary, 1 pole, 3 pos.
S3	51-01-044588-03	Switch, rotary, 3 pole, 4 pos.

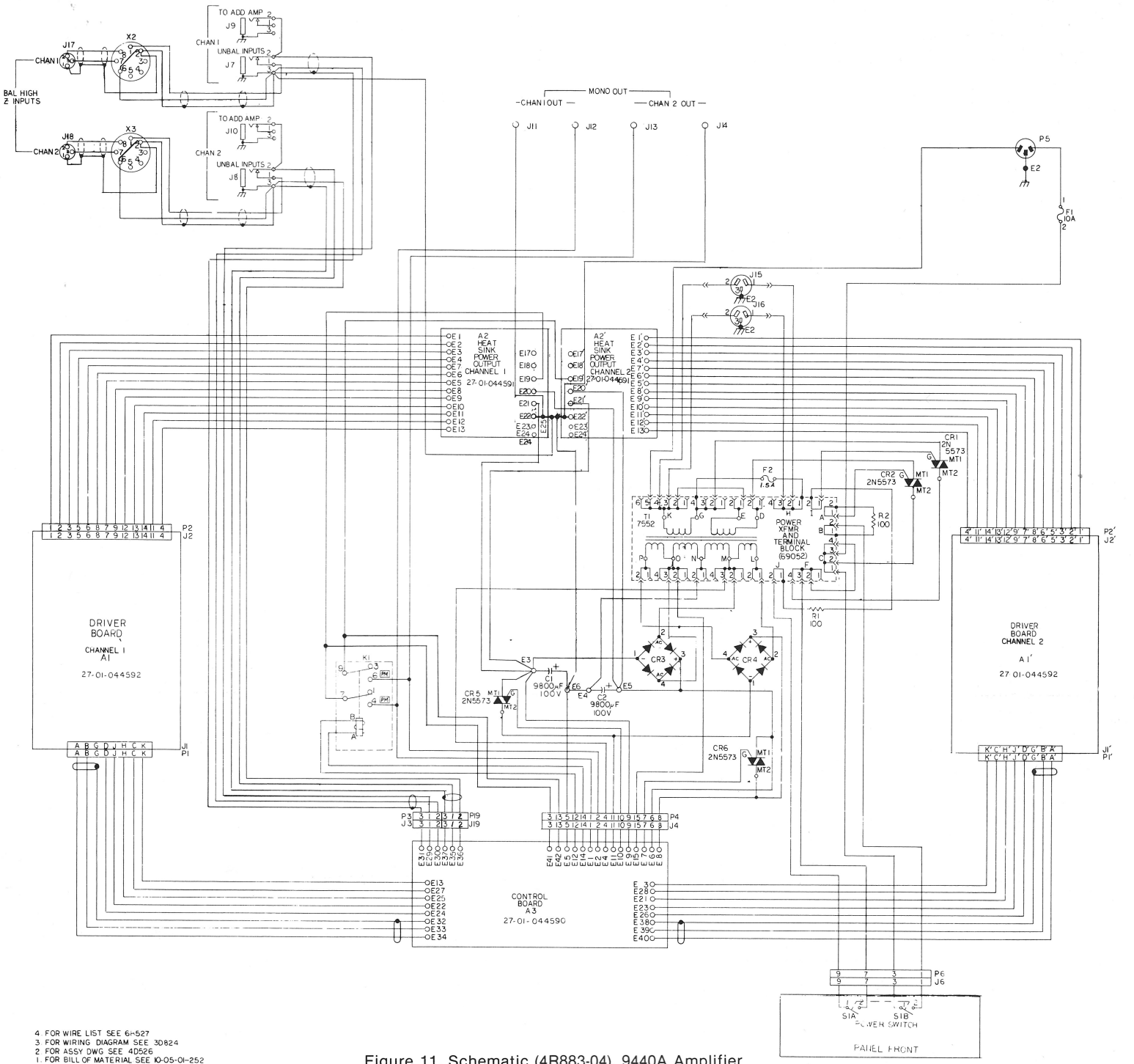

4. FOR WIRE LIST SEE 6-527
3. FOR WIRING DIAGRAM SEE 30824
2. FOR ASSY DWG SEE 4D526
1. FOR BILL OF MATERIAL SEE 10-05-01-252

NOTES: UNLESS OTHERWISE SPECIFIED

Figure 11. Schematic (4R883-04), 9440A Amplifier

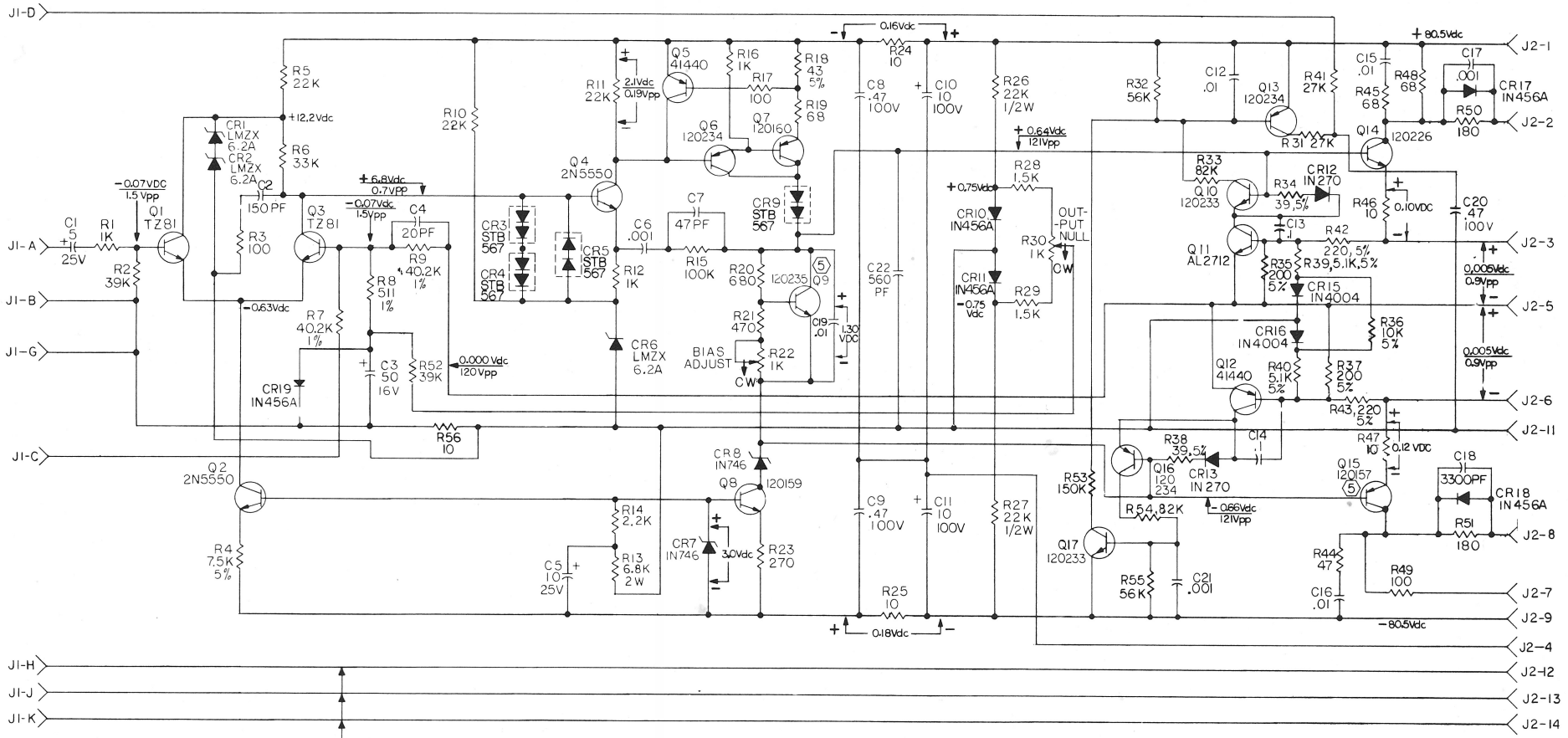

6. ALL VOLTAGES AT 120 VAC LINE, DC VOLTAGES AT QUIESCENT, REFERENCED TO J2-11 UNLESS OTHERWISE SHOWN. AC VOLTAGES ARE AT 220W INTO 8 Ω AT 1KHZ, REFERENCED TO J2-11 UNLESS OTHERWISE SHOWN. BIAS SET TO 75 MADC INTO E20 ON OUTPUT BOARD, WITH HEATSINK COOL.

(5) Q9 & Q15 HAVE THERMAL CONTACT BETWEEN THEM
4. FOR ASSY. DWG. SEE 4D886.
3. FOR SEPARATE BILL OF MATERIAL SEE 27-01-044592
2. ALL CAPACITORS ARE IN MICROFARADS.
1. ALL RESISTORS ARE IN OHMS, 1/4W, 10%

NOTES: UNLESS OTHERWISE SPECIFIED

HIGHEST REFERENCE DESIGNATION USED			
R56	C22	Q17	CR19
J2			
REFERENCE DESIGNATIONS NOT USED			
CR14			

Figure 12. Schematic (4D885-06), Driver Board

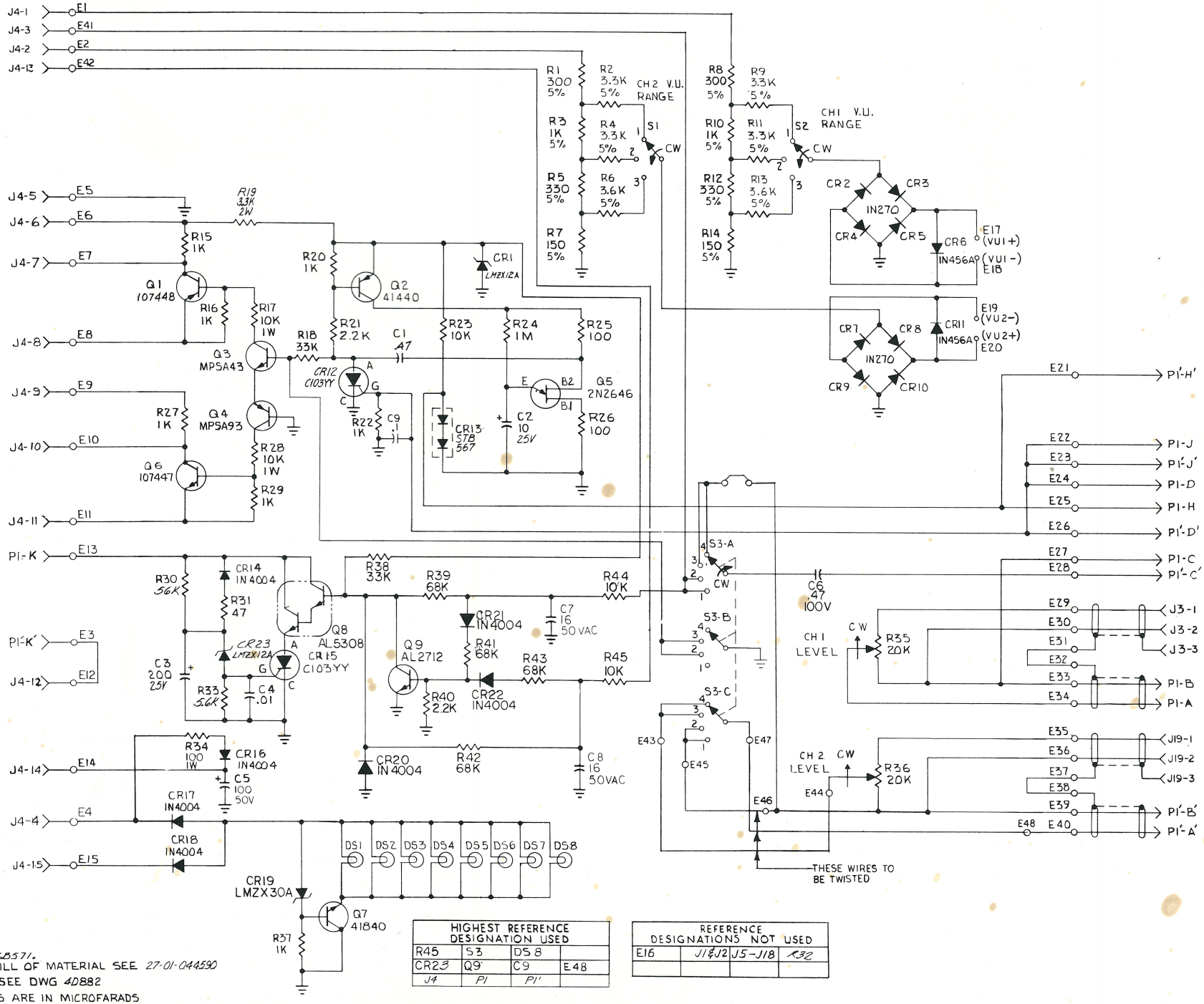

HIGHEST REFERENCE DESIGNATION USED			
R45	S3	DS8	
CR23	Q9	C9	E48
J4	P1	P1'	

REFERENCE DESIGNATIONS NOT USED			
E16	J1 & J2	J5-J18	R32

5. FOR WIRE LIST SEE LB571.
4. FOR SEPARATE BILL OF MATERIAL SEE 27-01-044590
3. FOR ASSEMBLY SEE DWG 4D882
2. ALL CAPACITORS ARE IN MICROFARADS
1. ALL RESISTORS ARE IN OHMS ±10%, 1/4 W

NOTES: UNLESS OTHERWISE SPECIFIED

Figure 13. Schematic (4D881-05), Control Board

Insert Ferrite Bead
w/#18 Wire Thru it
Replacing P.C. Wiring To the
base of Q5

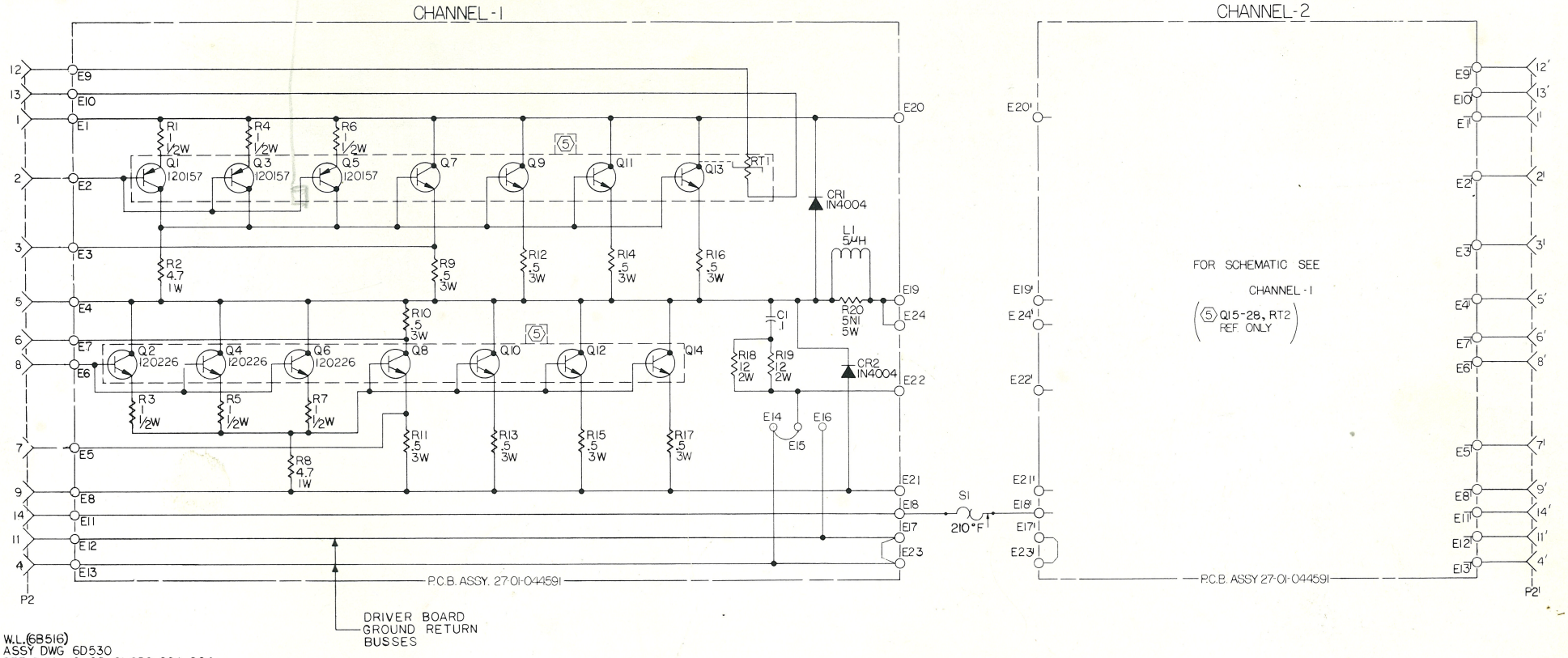

8. W.L.(68516)
7. ASSY DWG 6D530
6. SEE B/M 10-05-01-252 SSA 204
(5) ALL TRANSISTORS & RT1 RT2 ARE PART OF HEAT SINK ASSY. 14-05-044608 AND ARE FOR REFERENCE ONLY ON THIS SCHEMATIC.
4. FOR P.C.B ASSY SEE 4D884.
3. FOR P.C.B. ASSY. BILL OF MATERIAL SEE 27-01-044591.
2. ALL CAPACITORS ARE IN MICROFARADS.
1. ALL RESISTORS ARE IN OHMS

NOTES: UNLESS OTHERWISE SPECIFIED

Figure 14. Schematic (4D944-03), Heat Sink Power Output