MixWizard Recording Mixer

WZ20:8:2

WHEN YOU'RE MIXING WITH PROFESSIONALS

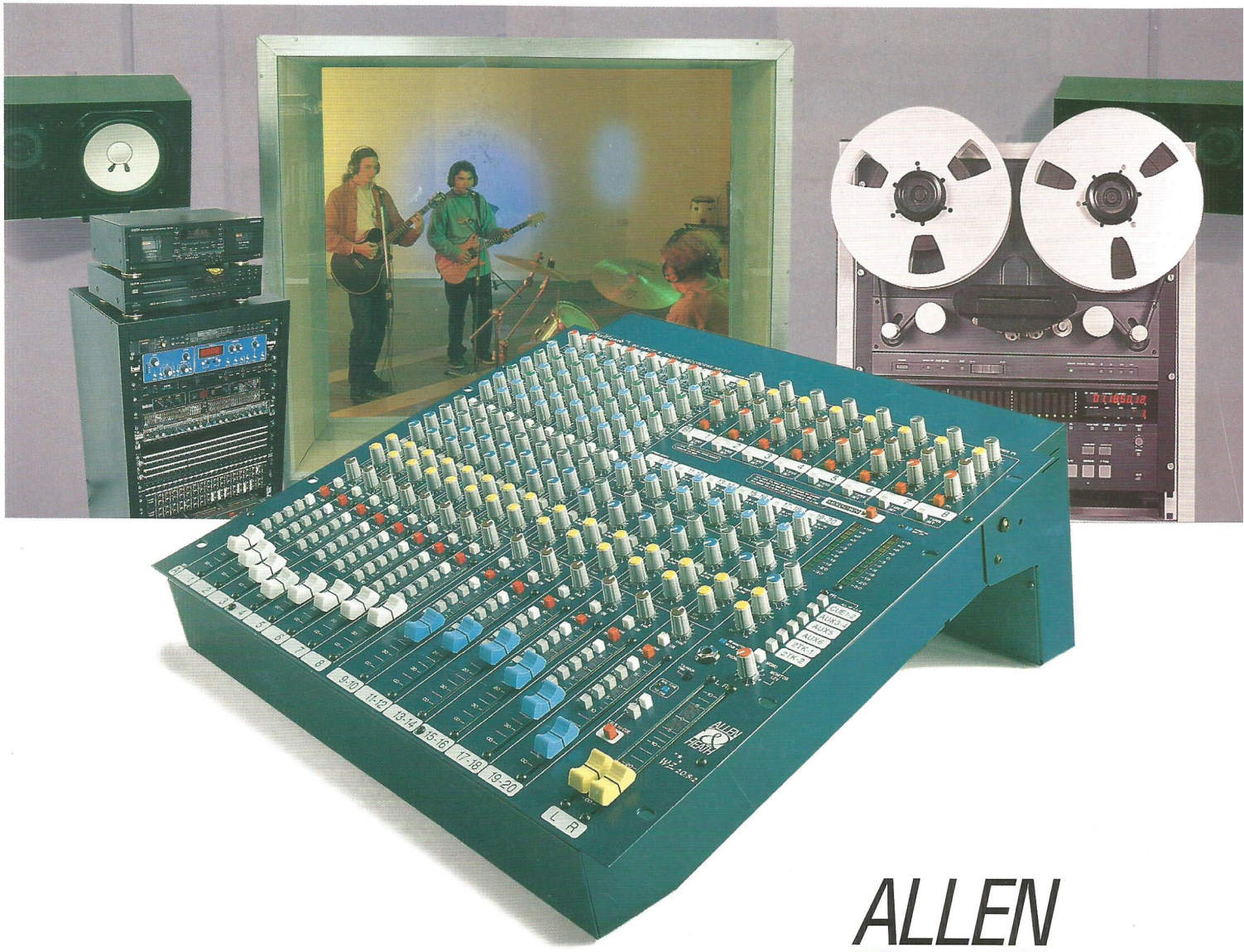

- Dedicated 8-track recording mixer
- Intuitive controls & superb sound quality
- No-compromise, British design and manufacture

ALLEN & HEATH

WZ20:8:2

MixWizard Series

- **The WZ20:8:2 is a dedicated 8-track recording console which lets you make professional quality recordings with ease.**
- **Intuitive to use, yet gives the superb sound quality and features you'd expect from a big studio mixer.**
- **For 8-track digital or analogue recordings, mixing down your stereo master tapes is really easy too - at the push of a button.**
- **Excellent 4-band EQ, 28 inputs on mixdown, 8 mic/line and 6 stereo inputs, 100mm faders and an outstanding monitoring system all bring you seriously professional results.**
- **Great for either single room or more sophisticated two-room studio setups and for on the road location work, WZ20:8:2 can be used on desktop or rack-mounted.**
- **Fully compatible with other studio equipment.**

First class mixing

If you're looking for a first class mixer that won't interrupt your creativity, a heart to your studio that'll couple all your gear, a friend that'll respond to a hint there, a touch here, and not impose its own ideas - then this is it: MixWizard 20:8:2 the professional mixer for 8-track recording.

British mastery

Designed and built in Britain by Allen & Heath, one of the world's best-known mixer manufacturers, WZ20:8:2 responds to the needs of the creative music maker who wants to master his sounds. Mixwizard masters the technology so that you can get on with the creative work.

Professional productions

Whether you're composing intro jingles or serious symphonies, hard rock tracks or commercial pop, mood music or film sound backing, you can be sure that WZ20:8:2 will produce a sonic quality to be proud of: the professional quality expected by today's broadcasters, producers and music reviewers.

Clean and simple

With 28 inputs, EQ, monitors, auxes and more mounted on the control panel, the last thing you want to do is to spend weeks learning how to use your mixer effectively. Allen & Heath have carefully designed the WZ20:8:2 for fast learning - after a little practice, you'll be totally familiar with its many functions.

Tidy working

You won't need to repeatedly plug and unplug your recorders, effects modules, noise gates and compressors: they can all be routed through WZ20:8:2 and switched in and out as you need them.

Full communications

WZ20:8:2 also lets you talk to musicians through their monitor headphones, and you can listen to one or any combination of them.

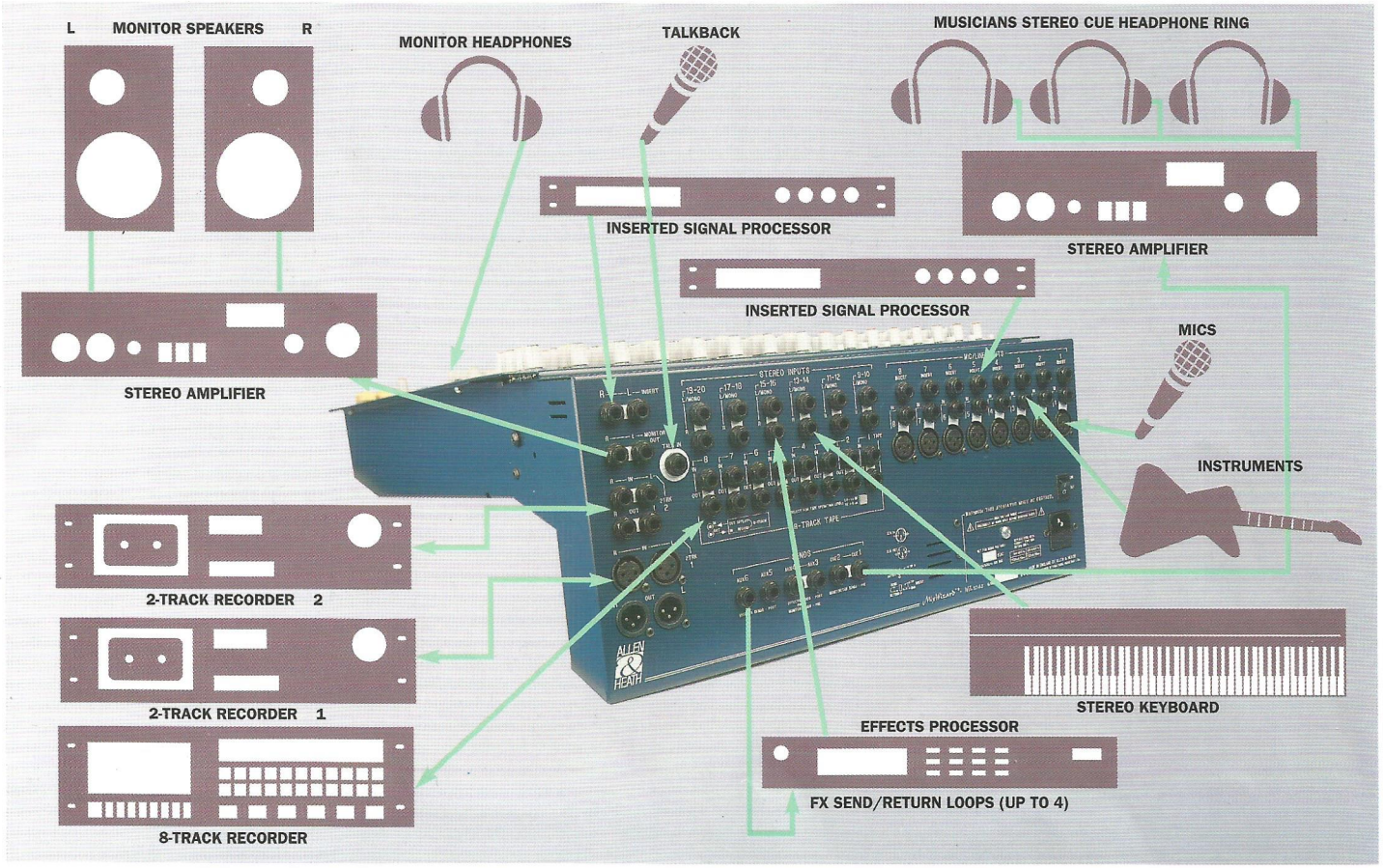

WZ20:8:2 mono inputs

Match any mic, instrument or processor. Massive 70 dB gain.

4-band equalisation at its best

Only with a full-spectrum four-band EQ can you fully control tonal response. Inferior three-band designs often miss out entire frequencies between bands.

Good EQ can be invaluable at track-laying to correct any tonal unevenness in instruments or excessive brightness, for example when miking up a live drum kit - or even to compensate for room resonances.

Full-spectrum EQ on WZ20:8:2 has the quality and range of control you'd only expect in a big studio mixer. Four extended-range overlapping bands, 2 with centre-frequency sweeps, leave no 'dead spots' between bands. You can compensate for microphone and instrument frequency responses, add sparkle and presence to voices, control sibilance or add colour during track laying, bouncing or mixdown:

HF	12kHz shelf
MF1	500Hz to 15kHz sweep, Q=1.9
MF2	35Hz to 1kHz sweep, Q=1.9
LF	60Hz shelf

All four bands give up to 15dB boost or cut, with by-pass switches for instant comparisons and transparent EQ lock-out - ideal when switching between recording and mixdown setups.

Set levels for musicians' headphones in stereo or mono.

Set levels for effects, processors, monitors, other recorders or special feeds.

Switch channel on or off, "pan" signal from left to right in your stereo soundfield.

Led shows if the signal level is too high, giving you the chance to pull back the gain if the signal is too hot.

Push this button to listen to this channel only in your headphones or monitor, without affecting your recording.

Choose which tracks should receive this channel.

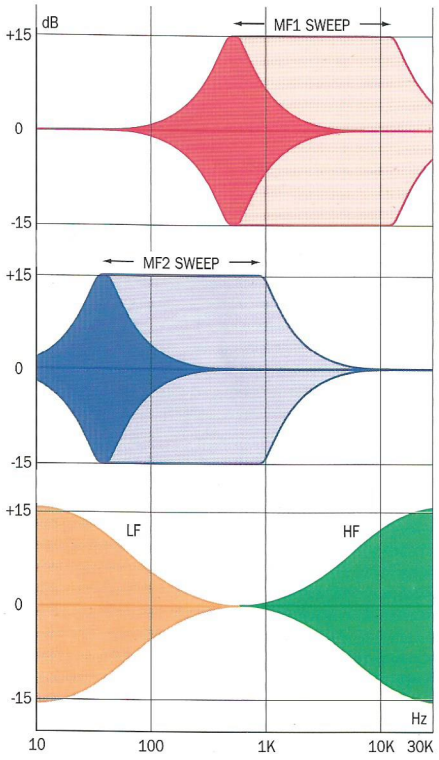

Full 100mm fader controls

When you're recording and mixing you will want to make subtle changes to levels or create smooth fadeouts. MixWizard 20:8:2 has 100mm faders throughout - ultimate control where you need it. Shorter fader controls would be a compromise, one nudge giving an unacceptable jump in level.

All WZ20:8:2's mono and stereo input channels as well as the L-R masters have full 100mm faders. Total control.

Tape return channels

The 8 track outputs from your recorder are taken to the separate tape-return channels, so you can easily add these to the monitor mixes at any time.

You won't need to change over any plugs and leads, even when track bouncing or overdubbing. Each channel has a tape reverse switch which routes that tape input through the full mono channel with its EQs, inserts, cue, aux and channel routing and all other facilities available for you when bouncing tracks.



Set levels for musicians' headphones in stereo (follows pan).

Get close to the final sound by adding fx mix to monitor mix

Pan signal from left to right in your stereo soundfield.

Set level to main L-R mix.

PFL for each tape return.

Switch to send this tape input to the main channel (mic/line input is automatically switched to this channel).

WZ20:8:2 stereo channels

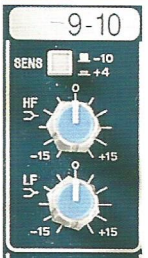

6 stereo channels for stereo instruments, effects returns, voice modules etc - or use for up to 12 more mono inputs.

Monitors, metering and outputs



3-colour 12-segment led level meters.

Big led indicates that PFL has been selected.

Adjusts musicians' stereo monitor. Check it in your own headphones.

Levels for fx and special sends.

Check the mono compatibility of your signals.

Operator's headphone socket and monitor volume control.

Operator's mic buttons to talk to musicians cue or put identifying messages on tracks.

1kHz oscillator to check the routing and line up of all signal paths.

Mastering mixdown

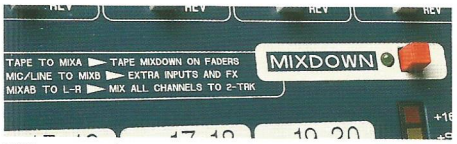

When you've got your finished 8 tracks ready, your final creation is at your fingertips. You don't want to stop the flow now, to swap connections, work out technicalities and lose the inspiration of the moment. Nor will you with WZ20:8:2 - push one button and you have mixdown! Our unique Mixdown switch instantly reconfigures the inputs, giving your multitrack signals the benefit of full EQ + insert processing and FX sends, yet the instrument/mic inputs still remain available! You don't have to change a single plug or repatch any wiring.
At the same time, all channel outputs (including the stereo channels 9-20) are routed to the two 2-track recorders. The full 100mm L-R faders give you smooth and silent control over your output mix and, at one stroke, WZ20:8:2 has set itself ready to make CD-quality stereo masters.

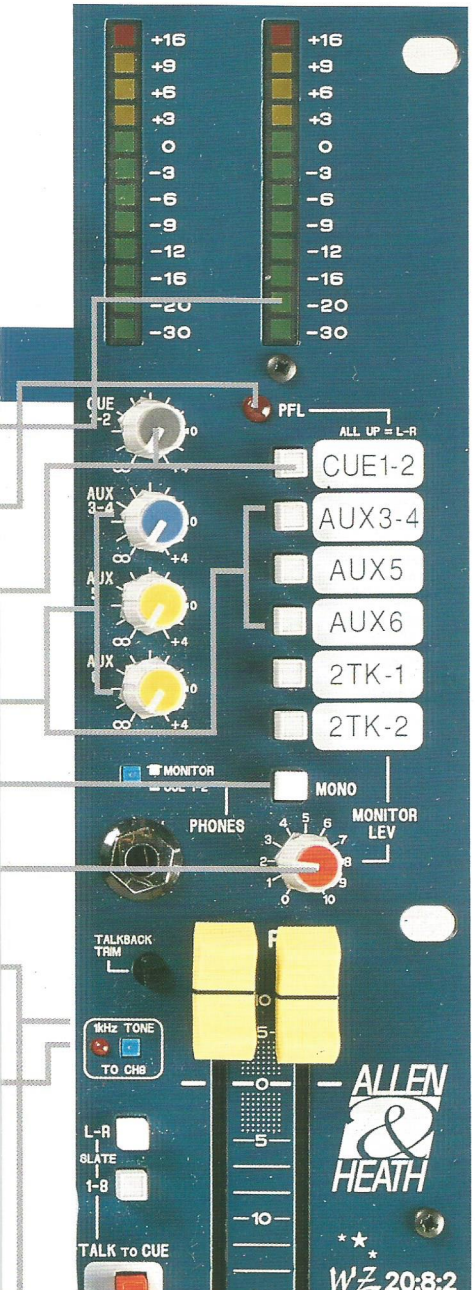

WZ20:8:2 features

QCC

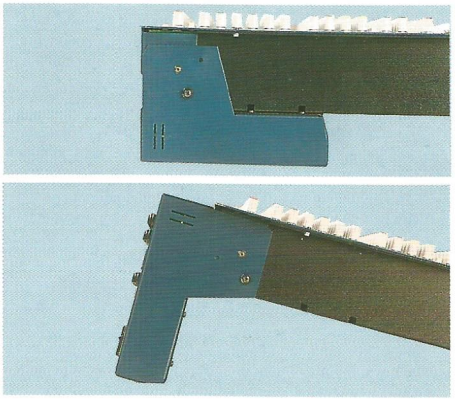

You may want to rack-mount the mixer, or use it free standing, so we've included Allen & Heath's unique QCC system which allows the connector panel to be positioned for rack mounting or rotated for desktop use; and you won't have to carry a separate power supply - it's built in.
Wherever you use WZ 20:8:2 you can rely on its rugged, steel-cased, vertical circuit-board construction.

MSP

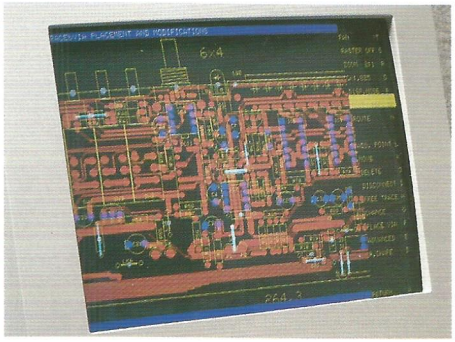

Any processing will inevitably change an original sound, even if it's imperceptible to the human ear -just sending a signal down a wire, or making a connection will have a minute influence.
First and last, WZ 20:8:2 is carefully designed to give you top-end sound quality. Allen & Heath's MSP (minimum signal path) electronics with wide-band flat amplifiers, top-grade low noise components and solid grounding give professional open, low noise, "transparent" performance. You create the music - not the mixer.
Signal colour correction and enhancement is added only by you, using the 4-band, wide-sweep EQ circuits on each channel.

APPLICATIONS INFORMATION

This brochure introduces MixWizard WZ20:8:2's terrific sound qualities and ease of use. Some of its technical features are listed on the right, but you might like to know more about exactly how WZ20:8:2 helps you to get those really professional recordings. Ask your dealer for our applications info, or contact us by mail, 'phone or Internet - details on back page.

- 6 aux sends with individual send controls including stereo cue.
- 8 mic/line and 6 stereo line input/fx returns channels with EQ and full routing.
- 8 tape return inputs with aux routing. Give your musicians that real "mix feel" with stereo cue and fx on tape returns while laying tracks. Cue sends follow pan, for quick stereo monitor setup.
- 28 inputs on mixdown.
- Unique mixdown mode switch - no cable re-patching needed.
- Two 2-track sends and returns give connection convenience and level matching: pro high-level bal XLR/TRS jack low level. Hook up both DAT and cassette.
- Talkback mic input with level trim for studio cues and tape slate.
- Headphone output and separate LR monitor output.
- Inserts on all mono channels and LR output mix.
- Balanced XLRs on main in and output, TRS jacks on others.
- 100 mm smooth faders on all channels and LR output.
- 4-band, 2-sweep EQs for full-spectrum control on mic/line channels.
- EQ-in switch on all mic/line channels.
- 2 band EQ on stereo channels.
- Wide gain high performance discrete front end with 70 dB range to match all sources.
- Phantom power available for all mono inputs.
- Stereo L and R inputs on separate jacks.
- 1 kHz oscillator for line-up, level-matching and path checking.
- Jack i/o interface for 8-track recorder with level matching switch.
- Comprehensive monitoring.
- PFL available on all channels and tape returns with PFL active warning leds.
- Mode switch for headphones as stereo monitor or musicians cue.
- Talkback to cue automatically dims monitor.
- 12-segment 3-colour led meters for L-R and PFL monitoring.
- Peak leds on all channels.
- MSP (minimum signal path) high quality audio build.
- QCC (quick change connector) rotation for rack or desk use.
- Individual vertical channel boards, individually mounted pots bolted to panel, robust steel case and chassis with internal power supply.

WZ20:8:2 specifications

MAXIMUM OUTPUT LEVEL

2-track 1 XLR	+27dBu into 2k ohm load
All other outputs	+21dBu into 2k ohm load

INTERNAL HEADROOM

Mix to output	+23dB
Channels	+21dB

PEAK LEDs Turn on 5dB before clipping

METERS
Peak reading 12 segment 3 colour led bargraph
0VU = +4dBu at 2-track 1 L-R output

FREQUENCY RESPONSE
20Hz to 50kHz +0/-1dB

TOTAL HARMONIC DISTORTION
THD+noise measured at +14dBu 1kHz
Channel to mix output < 0.008%

CROSSTALK measured at 1kHz, ref driven channel

Channel fader down	< -90dB
Channel off	< -90dB

NOISE measured rms 22Hz to 22kHz

Mic EIN referred to 150 ohm source	-128dB
L-R residual output noise	<-97dBu (101dB S/N)
L-R faders unity mix noise	<-82dBu (-86dB S/N)

MAINS POWER

AC mains input	Internal unit 100 to 240V AC @ 50/60Hz Internally wired to required country voltage
Power consumption	30W max
Mains fuse rating	
100-120V AC use	T630mA 20mm
220-240V AC use	T315mA 20mm

MECHANICAL SPECIFICATIONS

Dimensions (mm)	Width	Height	Depth
Desk mounted	483mm	195mm	530mm
Rack mounted	483(19")	444(10U)	135
Packed	590	260	610
	Unpacked	Packed	
Weight	11kg	14kg	



WZ20:8:2 connections and circuits

CONNECTOR PANEL

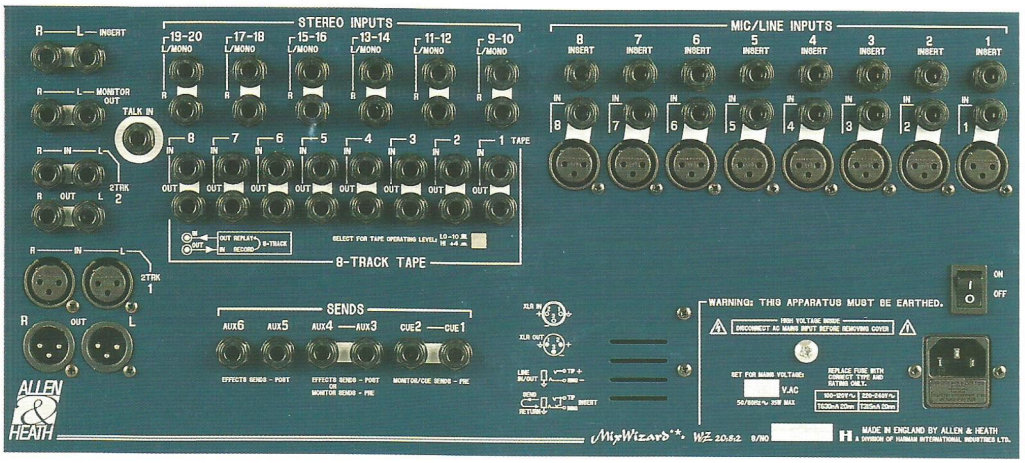

Inputs		Connector		Impedance	Level
Mic/line	x8	XLR pin2 hot, 3 cold		balanced	pad out 2k ohm -60 to -20dBu
	x16	TRS jack tip hot, ring cold		balanced	pad in 10k ohm -30 to +10dBu
Stereo ch 9-20	2x6	TRS jack	tip hot (L for Mono)	unbalanced	>10k ohm -10dBV /+4dBu
Tape 1-8	x8	TRS jack	tip sig, ring grnd	unbalanced	>10k ohm -10dBV /+4dBu
2-track 1	x2	XLR	pin2 hot, 3 cold	balanced	>10k ohm +4dBu
2-track 2	x2	TRS jack	tip hot, ring cold	balanced	>10k ohm -10dBV
Talkback mic	x1	TRS jack	tip sig, ring gnd	unbalanced	2k ohm -50 to -20dBu
Inserts					
ch 1-8	x8	TRS jack	tip send, ring return	unbalanced	<75 ohm, >3k ohm 0dBu
L-R mix	x2	TRS jack	tip send, ring return	unbalanced	<75 ohm, >7k ohm -2dBu
Outputs					
2-track 1	x2	XLR	pin2 hot, 3 cold	balanced	<75 ohm +4dBu
2-track 2	x2	TRS jack	tip hot, ring cold	impedance balanced	<75 ohm -10dBV
Tape 1-8	x8	TRS jack	tip hot, ring cold	impedance balanced	<75 ohm -10dBV /+4dBu
Cue 1-2, Auxes 3-6, Monitor L-R		TRS jack	tip hot, ring cold	impedance balanced	<75 ohm -2dBu
Headphones	x1	TRS Jack	tip L, ring R, on front panel	30 to 600 ohm headphones recommended	
Mains power inlet	x1	Standard IEC 3 pin L,N,E. IEC to moulded plug supplied (country-dependent), internally wired for required worldwide voltage			

BLOCK DIAGRAM

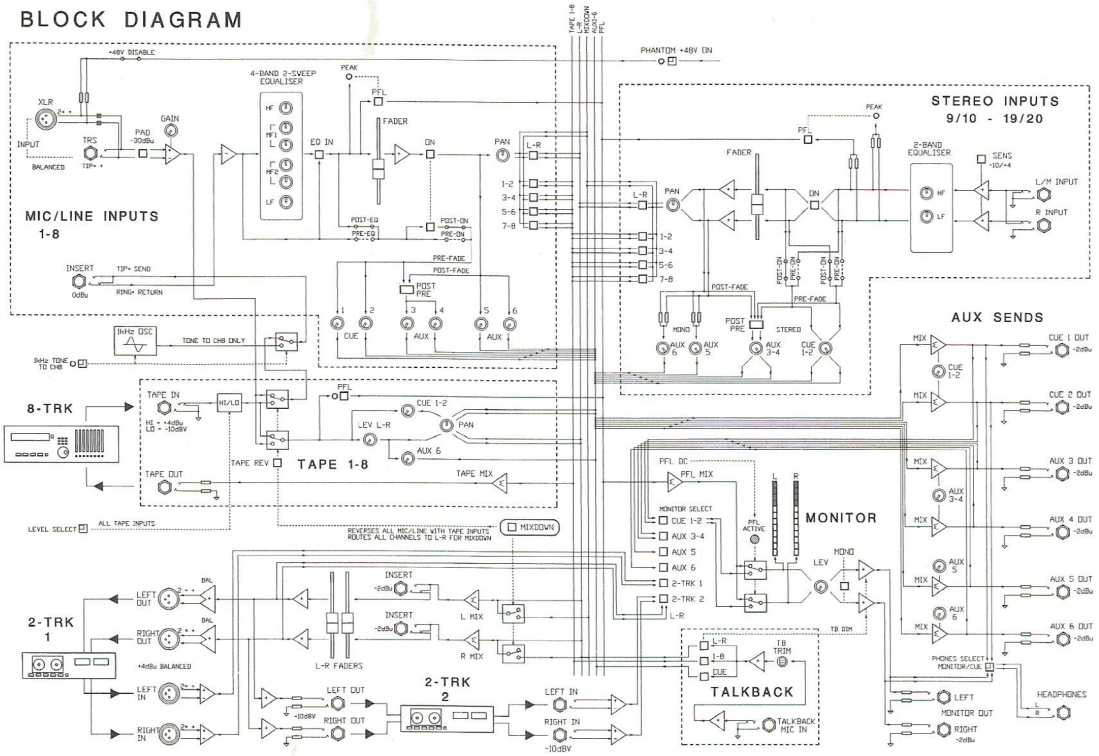

ALLEN & HEATH
Kernick Industrial Estate, Penryn, Cornwall TR10 9LU.
Tel: (+44) 01326 372070 Fax: **(+44)** 01326 377097
http://www.allen-heath.com

INVESTOR IN PEOPLE

1995

The WZ20:8:2 complies with the European Directives for Electromagnetic Compatibility 89/336/EEC & 92/31/EEC

A Harman International Company

Allen & Heath reserve the right to improve or otherwise alter any information supplied in this document or any other documentation supplied hereafter