Serial no.

_____

AD 261
ENG MIXER

HANDBOOK

Manufactured by
Audio Developments Ltd
23 Portland Road, Aldridge,
Walsall, West Midlands,
WS9 8NS England
Tel: 44 (0)1922 457007
Fax: 44 (0)1922 457008
email: sales@audio.co.uk

WARNING

IMPORTANT SAFETY INSTRUCTIONS

The user of electrical products must be familiar with their potential dangers, and fundamental precautions must always be taken. Please read the following text carefully.

A power supply unit manufactured by Audio Developments Ltd is not user serviceable - it has no user-serviceable parts.

THE OUTER COVERS MUST NOT BE REMOVED

Such a power supply unit is solely for use with audio mixers and sound processors - hereafter called the equipment - manufactured by Audio Developments Ltd.
Always use a cord set accepted by a National Approved Body.

EARTHING/GROUNDING: When using an external power supply unit that is connected to the mains supply to drive the mixer it must be CONNECTED TO EARTH.

In certain types of malfunction or breakdown, earthing provides a path of least resistance for electric current and considerably reduces the risk of electric shock.

DANGER: Incorrect connection of the equipment grounding/earthing conductor can result in the risk of electric shock. Where possible obtain a pre-wired mains lead from a reputable supplier with the correctly fitted mains connector for the type of mains outlet in use; otherwise, one correctly wired and checked by a qualified electrical engineer. If your mains lead is not suitable for the mains outlet, have the correct plug fitted by qualified personnel.

The MAINS PLUG of this equipment is the primary disconnect device. Therefore, in final application, ensure it remains close to the equipment and easily accessible.

OTHER PRECAUTIONS

- Read the instructions before using the equipment and its power supply unit.
- The power-supply cords should be unplugged from the outlet when left unused for a long period.
- The equipment, but especially the mains power supply unit, should be serviced by qualified personnel.
- The mains power supply unit should be checked by qualified personnel on a periodic basis to ensure it meets its specifications, especially those associated with SAFETY.
- Electrical and electronic products should definitely be serviced if the power supply cord or plug have been damaged.
  OR
  Objects have fallen on them or they has been dropped, causing physical damage.
  OR
  Liquid has been spilled upon them or they have been exposed to rain.
  OR
  They do not seem to perform at all, or are operating, or appearing to operate, below normal specification.
- Do not use the equipment or a mains power supply unit near water or in rain or in any other areas where the power supply could get wet or exposed to moisture.
- Never locate your equipment and its power supply unit near a source of heat, eg radiator or stove.
- The equipment should only be connected to the type of power supply unit marked on its casework or as described in the operating instructions.

CONTENTS

1.0 Introduction
1.1 Unpacking
1.2 Inspection
1.3 Points to consider before use

2.0 Mixer Features & Connections
2.1 Top Panel
2.2 Input Side Panel
2.3 Output Side Panel
2.4 Connection Details

3.0 Operating Notes
3.1 Inputs
3.2 High Pass Filters
3.3 Microphone Power
3.4 Phase Change
3.5 Routing & S Control
3.6 Outputs
3.7 Limiters
3.8 Line Up Tone
3.9 Auxiliary Input
3.10 Monitoring
3.11 Slate Microphone
3.12 Power Facilities

4.0 M-S Microphone Techniques
4.1 General
4.2 Coincident Microphone Techniques
4.3 Spot Microphones
4.4 Near Coincident Microphone Techniques
4.5 The Matrix Process
4.6 AD261 Matrix Amplifiers

5.0 Servicing
5.1 Handling
5.2 Static Sensitive Precautions
5.3 Module Removal
5.4 Component Removal/Replacement
5.5 Adjustments & Calibration

CONTENTS

6.0 Technical Library

6.1 Block Diagram
6.2 Level Diagram
6.3 Mother Board Circuit/Component References/Parts List
6.4 Input
6.5 Microphone Amp
6.6 Mixer & Routing
6.7 Output & Limiters
6.8 Unbalanced Output
6.9 Monitor
6.10 Peak Program Meter
6.11 V.U. Meter
6.12 D.C. Converter
6.13 Powering

7.0 Technical Specification

7.1 Specification
7.2 Gain Structure
7.3 Battery Discharge curves

8.0 Operator Notes

1.0 INTRODUCTION

The AD261 has been added to Audio Developments' range of Location Mixers to complement the highly successful AD146. Carrying on our philosophy of continual investment in R & D we are pleased to say that we have developed a truly professional M-S compatible field production mixer.

With over 25 years of dedication to the design of high quality analogue audio mixers the AD261 has been designed for the needs of recordists well into the 21st Century. We are confident that it will only be superseded in the portable domain by digital mixer technology when the problems of excessive power consumption and harmonic radiation not encountered with existing analogue circuity have been overcome.

We wish you many trouble-free hours of use from your mixer. As a company we are fully committed to BS EN ISO 9001 Should you have any problems whatsoever please do not hesitate to contact us by phone on 01543 375351 or by fax on 01543 361051.

1.1 Unpacking

If there are any signs of damage to the outside of the carton please notify us or your supplier immediately regardless of the unit's apparent physical condition. This is in case a claim is necessary due to transit damage remaining undetected until a later date. The packaging should not be discarded until the unit has been acceptance tested and a suitable transit/storage case is available for secure safe storage.

1.2 Visual Inspection

Identification - Please make a separate note of the serial number for your own capital equipment records. See that it tallies with the invoice/packing note. The serial number label is on the back cover adjacent to the battery cover.

1.3 Some Points to consider before using AD261 Mixer.

- Ensure correct microphone power is selected before connecting micro-phones.
- Ensure the microphone power is switched off when inputs are un-terminated. If the microphone power is switched on when the input is unterminated it will result in greatly increased inter-channel crosstalk when switched to T.A. Powering.
- When using AD100 Series Power Supply and Charge Unit with batteries, only allow charge switch to operate when using Nicad Cadmium batteries.
- On the AD100 Series Power Supply there is a mains voltage selector. Ensure this is in the correct position for the intended mains voltage.
- Do not store the mixer with batteries for long periods. This will result in battery leakage.
- Remove batteries when transporting. Often mixers can accidentally be switched on whilst packing is taking place.
- To clean mixer, do not use solvent cleaners. This may result in the facia panels lifting and/or plastic components suffering. It is best to use a damp cloth and mild detergent.
- Do not subject the AD261 to unnecessary high or low temperatures. This could result in the drifting of certain calibration points.

2.0 MIXER FEATURES & CONNECTIONS

2.1. Top Panel

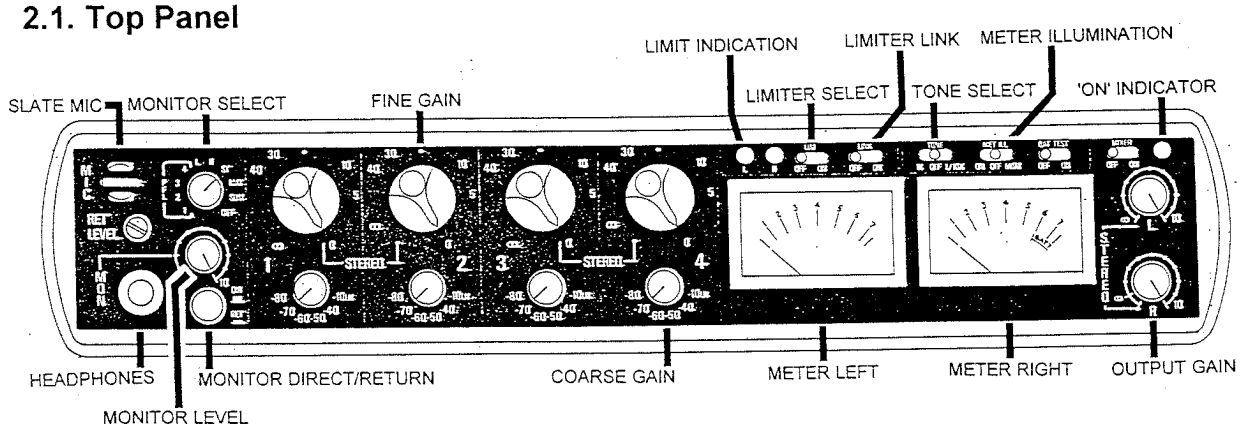

2.2 Input Side Panel

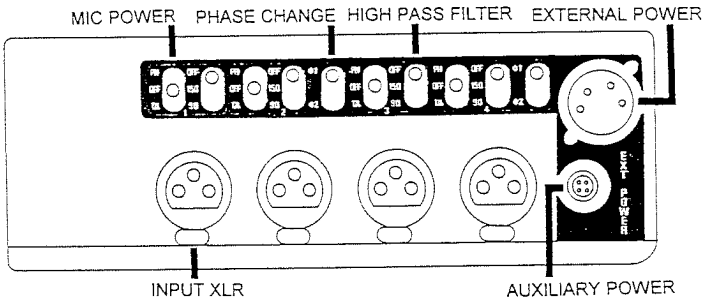

2.3 Output Side Panel

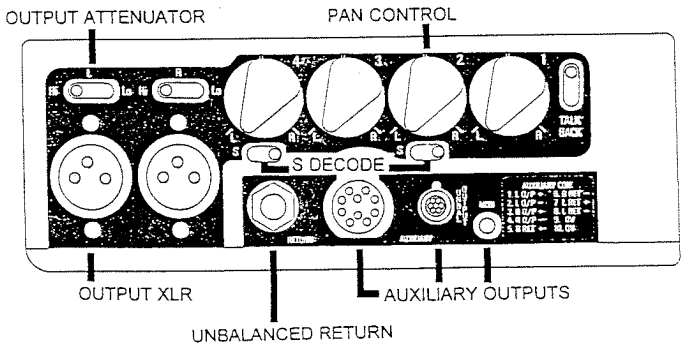

2.0 MIXER FEATURES & CONNECTIONS

2.4 Connection Details

Ext. Power Connector	4 Pin Male XLR	Pin 1	0v
		Pin 2	Charge +16v to 21v DC
		Pin 3	N.C.
		Pin 4	+10 to +15v DC
Auxiliary Power	4 Pin Hirose	Pin 1	0v
		Pin 2	0v
		Pin 3	Power Out
		Pin 4	+10 to +15v DC
Input Connector	3 Pin Female XLR	Pin 1	Screen
		Pin 2	Live
		Pin 3	Return
Output Connector	3 Pin Male XLR	Pin 1	Screen
		Pin 2	Live
		Pin 3	Return
Headphone Socket	1/4" 'A' Type Jack	Sleeve	Screen
		Tip	Left
		Ring	Right
Headphone Socket	3.5mm Mini Jack	Sleeve	Screen
		Tip	Left
		Ring	Right
Unbalanced Output	6 Pin Hirose	Pin 1	Left
		Pin 2	Right
		Pin 3	Screen/Ground
		Pin 4	N/C
		Pin 5	N/C
		Pin 6	N/C
Unbalanced Return	1/4" 'A' type Jack	Sleeve	Screen
		Tip	Left
		Ring	Right
Multiway Auxiliary	10 way Hirose	Pin 1	L o/p +
		Pin 2	L o/p -
		Pin 3	R o/p +
		Pin 4	R o/p -
		Pin 5	R Ret +
		Pin 6	R Ret -
		Pin 7	L Ret +
		Pin 8	L Ret -
		Pin 9	0v
		Pin 10	0v

3.0 OPERATION

3.1 Inputs

The mixer is equipped with 4 inputs on XLR connectors that can be selected as either microphone or line inputs.

The input stage incorporates a 6 position selector switch, 5 positions designated to microphone sensitivity (-80, -70, -60, -50, -40) and the 6th position is a line level input (-10). The numeral marking around the selection switch refer to the maximum gain available in the signal path. For example, if the switch is set to the 60 position, with the channel and master gain controls at '0' (i.e. zero attenuation) then the overall gain of the specified channel is 60dB.

The gain control associated with each input determines the level sent from each channel to the main mix.

The input channels can also be linked to form two stereo pairs, Channel 1 & 3 becoming the master when Channels 2 & 4 gain controls are turned fully counter-clockwise.

3.2 Hi Pass Filter

Each channel contains a balanced H.P.F. with two turnover frequencies selectable on a toggle switch located on the output connector side panel. The filter is placed right at the beginning of the signal path, pre the input transformer. This means that any unwanted low frequencies, such as wind noise, can be removed before they enter any gain element of the mixer that may become overloaded.

3.3 Mic Powering

External microphones can be powered by the mixer. Each channel has a 3 position, centre off, toggle switch located on the input connector side panel which can select either 48 volt Phantom supply which is applied to Pin 2 & 3 of the XLR connector or a 12v A.B. (Tonader) supply which is applied to Pin 2 of the XLR.

3.4 Phase Change

Inputs 2 and 4 have a two position toggle switch located on the input connector side panel which when selected reverses the phase of the incoming signal.

3.5 Routing Control

The routing of the input channels is controlled by 4 pan potentiometers located on the output connector side panel. The rotary controls have 3 detent positions, one is the counter-clockwise position which routes all of the signal to the left output, one is the centre position which routes equal signal to both outputs and one is the clockwise position which routes the signal to the right output.

Above Channel 2 & 4 pan potentiometer is located a two position toggle switch. When the switch is selected to the 'S' position a 180° phase shift is introduced to the channel right output, this enables a M-S recording to be decoded and mixed in A-B.

3.0 OPERATION

3.6 Outputs

The left and right outputs appear on male XLR connectors on the opposite side panel to the inputs. They are transformer balanced with floating earth. The balanced output also appears on the 10 pin Auxiliary Connector. A separately buffered unbalanced left and right output is available on a 6 pin Hirose socket on the same side panel.

The output level is controlled by two potentiometers situated to the right of the meters.

With the right control turned fully counter-clockwise the left potentiometer controls both outputs for stereo operation.

A 50dB attenuator is incorporated in each output to allow microphone level to be sent from the mixer. This function is selected using the toggle switch mounted under each output connection. 'Hi' selects line level output and 'Lo' selects microphone level output.

3.7 Limiters

A limiter is incorporated in each output amplifier acting on the final stage, thus governing the level sent to the output. The threshold is factory set to +8dBm but is adjustable via a preset. (See calibration).

The limiter is controlled by two toggle switches marked 'LIM' and 'LINK', situated above the left hand meter. When the 'LIM' switch is on both limiters come into operation but act on the outputs independent of each other. When the 'LINK' switch is on as well as the 'LIM' switch the limiters are in stereo operation mode. This allows the stereo image to be maintained because even when the levels on left and right are different to such a degree that only one limiter would be acting, the other output still has its gain reduced by the same amount by the link action.

To the left of the 'LIM' switch are situated a yellow and green LED marked L & R respectively. These indicate when gain reduction is taking place. The ideal operating point is when these LED are winking rather than illuminated continuously. This will allow the maximum dynamic range to be maintained.

3.8 Line-Up Tone

A three position toggle switch situated above the meters controls the two internal tone generators. The switch is marked '1K' 'OFF' and IK/10K' when it is in the 1K Position a lkHz tone is introduced into both outputs. The tone is injected pre the master gain controls and the main signal path is broken. With the switch in the 1K/10K position a continuous 1kHz tone is sent to the left output and an alternating 1kHz-10kHz tone is sent to the right output. This tone changes frequency approx. every 3 seconds allowing the operator to identify the left and right outputs. The level sent to the outputs is factory set to +10dB (See calibration) with the output controls fully clockwise.

3.9 Auxiliary Input

A stereo Auxiliary input connector is located on the output side of the mixer. This enables an external stereo line level signal, either balanced on the 10 way Hirose Connector, or unbalanced on the Jack Connector, to be monitored by the operator. The level is adjusted by a screwdriver-operated potentiometer mounted on the top panel by the headphone jack socket.

3.0 OPERATION

3.10 Monitoring

The audible monitor signal comes out on a Type A straight jack socket mounted on the top panel, and is also available via a 3.5mm mini jack socket mounted on the output connector side panel. The level is controlled via a ganged potentiometer situated to the right of the monitor jack output. A 10 position monitor select switch enables the operator to monitor the following signals:-

Switch Position 1 Pre fader level of Channel 1

2 Pre fader level of Channel 2

3 Pre fader level of Channel 3

4 Pre fader level of Channel 4

5 'L' Left output

6 'R' Right output

7 'ST' Stereo, i.e. left output on the tip and right output on the ring of the monitor jack.

8 'MAT' Matrix, i.e. The decoded/encoded output signal - this enables the operator to record the signals in M-S format while monitoring in X-B format or visa versa.

9 'SUM' The sum of the left and right outputs appears on both the tip and ring of the monitor jack.

10 'DIFF' The difference between left and right output appears on both the tip and ring of the monitor jack.

A TAPE/DIR Switch is also provided to enable the operator to monitor the Auxiliary input. This switch precedes the monitor selector switch so the same switch functions apply to the Auxiliary signals as to the program signals. When the TAP/DIR switch is in the TAPE position the pre fader listen of the four input channels can still be monitored.

The visual monitoring via the meters is post the TAPE/DIRECT Switch and therefore enables the operator to visually monitor the program and tape return.

3.11 Talkback

A biased ON toggle switch located on the output connector side panel is used to slate the built-in talkback microphone mounted on the top panel on to the two outputs.

3.12 Powering

The mixer is capable of being powered from an external D.C. source or internal batteries. The external power is supplied via a 4 pin XLR or 4 pin Hirose, mounted on the input connector side panel.

A nominal +12v @ 200mA is also available from the 4 pin Hirose, with this facility it is possible to power associated equipment such as radio mics

Reference to the connection details will show that any regulated D.C. source of a voltage range of 10v to 15v and capable of supplying 500mA is sufficient to power the mixer.

Also built into the mixer is a constant current charger for recharging NICAD batteries. A voltage supply of at least 18v is required to the charge circuit. The charge current is between 210 and 250mA. e.g. Audio Developments Power Supply AD100-09.

4.0 M-S MICROPHONE TECHNIQUES

4.1 General

Of the various techniques which have evolved for stereophonic recording, the so-called COINCIDENT, NEAR-COINCIDENT and SPACED-APART techniques have found favour in the recording of classical music -- being better suited to preserving natural perspectives and balances; whereas for the recording of popular music, the favoured technique is one which uses many microphones closely positioned to their sources for maximum isolation.

Increasingly, it is being realised that, of the coincident microphone techniques, the rediscovered M-S (middle-side) technique has many advantages over the other coincident techniques, particularly when working in unknown or difficult situations.

Several leading manufacturers are now producing integrated M-S microphones but many are of the electret variety exhibiting typical frequency response aberrations. Our own extensive research and experimentation have shown that the highest quality and maximum flexibility are obtained when using the new generation of discrete, true condenser microphones. An extremely high quality M-S system can, for instance, be assembled from the SENNHEISER range of studio condenser microphones (MKH20,30,40,50,60,70) together with the MZD30 which clips two microphones together in 'piggy-back' style and aligns the capsules in the same plane. (It should be noted that these microphones use RF technology and therefore offer high immunity to moisture in the atmosphere.) With such a system, not only can the most suitable choice be made for the M signal microphone -- omni directional, cardioid, hypercardioid, (short-gun, long-gun,) -- but also there is no requirement for extra microphone powering units and/or matrix amplifiers as the AD261 is able to supply all the control necessary for professional, stereophonic recording.

[Ref. A new line of studio condenser microphones designed for the digital age. Manfred Hibbing, Sennheiser Electronic]

For stereo TV and film, M-S is the obvious choice: it permits the easy matching of audio and visual images - focusing performers in the centre of a wide 'stage' or expanding the stereo image and adding ambience on 'long shots', and if mono compatibility is of great importance then this format is the clear winner. (The majority of the listening audience still hears a mono mix.)

It has been shown that more ambience is preferred when listening in stereo than when listening in mono. Recordings made using the M-S technique satisfy these preferences as the presence of the S signal increases ambience with the M signal being true mono. Because of the way the pair of microphones responds to reverberant information, a well done M-S recording preserves a high degree of realism.

When using the M-S technique, the microphone system can be positioned in order that the forward facing capsule produces the optimum mono signal with the best possible frequency response whilst maintaining easily adjustable stereo perspective and ambience whereas recordings made with X-Y techniques can suffer from centre stage high-frequency deficiency caused by the off-axis degradation of HF response of many directional microphones. Critical and discerning listeners are aware of the image shifting with changing frequency caused by less-than-perfect microphone polar patterns or the use of unmatched pairs of microphones. These same listeners will also be disturbed by the phasing effects caused by the movement across the faces of badly positioned 'spot' or highlighting microphones and by the fact that images at low frequencies are often narrower than those at high frequencies.

4.0 M-S MICROPHONE TECHNIQUES

4.2 Coincident Microphone Techniques (Intensity Stereo)

A crossed pair of microphones is used with the capsules USUALLY arranged in a vertical plane and as close to each other as possible: the angle included by the capsules is symmetrical with respect to the central axis of the sound source. The angular accuracy of the stereo image is independent of the distance from sound source to microphone but the resultant recording can seem rather dry and lacking a sense of space.

There is a choice of capsules available when using this crossed pair or X-Y technique. The earliest of these techniques were developed by Blumlein. ONE of his techniques uses a pair of figure-of-eight microphones set at an included angle of 90°. Best used in large spaces where reflections from boundary surfaces are minimal and where strong signals are not presented to the rear quadrants, this technique produces a very natural sound.

When cardioid or hypercardioid microphones are used, the included angle is usually 90°-120°. (Some authors reserve the term X-Y to refer only to a crossed pair of cardioid microphones.) The included angle determines the width of the stereo image and is selected with other factors in mind: distance from, and width of, the sound source and polar response of the chosen microphones. The polar and frequency responses (together with sensitivities) should be matched as closely as possible, otherwise considerable colouration and image shift can occur with changes in pitch.

When cardioid capsules are used they are usually placed fairly close to the sound source giving a high ratio between direct and reverberant sound and good rejection of unwanted sound at the rear of the microphone pair.

Even with an optimally positioned X-Y pair of cardioid microphones there is no guarantee that the resultant recording will fill the space between the loudspeakers. Post-production techniques are available to overcome this and other problems, but experience has shown that to take advantage of these techniques the capsules should be CROSSED OVER and spaced apart at a distance of approximately 2 inches. *(Fig 1)*

Fig 1

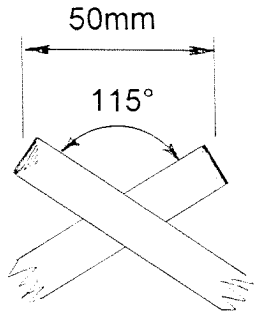

This spacing, which does not apply to other directional microphones, actually improves stereo imaging.

The use of hypercardioid capsules offers a good compromise between crossed pairs of cardioids and crossed pairs of figures-of-eight. The beam of a hypercardioid is narrower and the 'reach' longer than that of a cardioid, therefore these microphones can be used at a greater distance from the sound source for the same direct/reverberant sound ratio but, because of the presence of a rear pickup lobe, there is an increase in the sense of space. The narrower beam is a slight disadvantage in that in order to provide a solid central image, the included angle must be less than that for a pair of cardioid microphones. Hence, this system is not entirely suitable for wide sound sources.

The M-S technique was rediscovered by Lauridsen and uses a microphone (M) aimed along the central axis of the sound source and a figure-of-eight microphone (S) at right angles to this axis (it is assumed that the positive lobe is orientated to the LEFT for the purposes of these notes). The outputs of the microphones are combined in a 'sum and difference' matrix amplifier to produce conventional left and right stereo signals. Later

summation of the L-R signals to produce a compatible mono signal is more predictable than when using stereo signals recorded using other formats (=2M); alternatively, the original M signal can be used. Thus, by careful choice of type and position for the M microphone, the optimum mono signal can be achieved with a minimum of off-axis colouration.

Of all stereo recording techniques, the M-S is the one which offers the engineer most control and flexibility, not only during recording but also during post-production. By varying the ratio of the signals sent to the matrix amplifier, the width of the stereo image can be adjusted. By changing the pickup pattern of the M microphone (a remotely controlled polar response being advantageous in this context), the apparent distance from the sound source, and hence the amount of ambient information in the M signal, can be controlled.

The most popular choice for the M signal is a cardioid microphone. In this case, after matrixing the two signals, the resultant left-right stereo is equivalent to an X-Y pair of hypercardioid microphones. If an omnidirectional microphone is used for the M signal, the X-Y equivalent is a pair of back-to-back cardioid microphones with their common axis parallel to the axis of the figure-of-eight microphone. This arrangement is useful when performers can be arranged on both sides of the microphone pair. If a figure-of-eight microphone is used for the M signal, the X-Y equivalent is a crossed pair of figures-of-eight each being at 45° to the central axis of the sound source. This M-S form provides the most even distribution of reverberant pickup of all the M-S techniques.

[Note: it is assumed that M=S, ie the microphones have the same sensitivity and that there is the same amount of gain in each of the two signal paths.]

When M>S	
M=omnidirectional:	The resultant cardioids become more omnidirectional.
M=cardioid:	The rear lobes of the resultant hypercardioids are reduced in size and the included angle decreases.
M=figure-of-eight:	The included angle between the resultant crossed pair is less than 90°.
When M<S	
M=omnidirectional:	The resultant cardioids become more hypercardioid.
M=cardioid:	The rear lobes of the resultant hypercardioids are increased in size and the included angle increases.
M=figure-of-eight:	The included angle between the resultant crossed pair is greater than 90°.

Fig 2

M-S/X-Y TRANSFORMATIONS

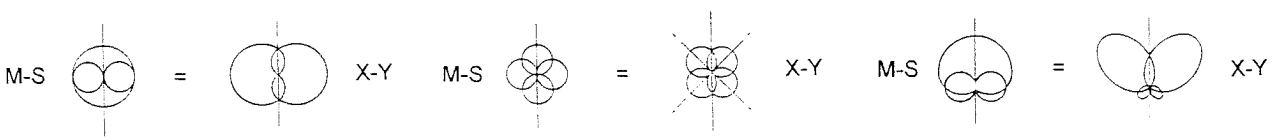

[An X-Y pair of cardioid microphones has no realistic M-S equivalent.]

A very effective M-S combination for use where normally a single gun microphone would be used is a hypercardioid (M) in conjunction with a figure-of-eight microphone (S). However, during our research it has been made very clear to us that the Sennheiser MKH 416 short gun microphone is going to be a very popular choice for the M signal, but careful attention must be paid to the effects of the side lobes on the S signal.

[It should be noted that the sensitivities of the 12v tonader and the 48v phantom powered versions of this microphone are not the same.]

The AD261 has been designed to accommodate microphones of different sensitivities and, at the same time, provide one-knob operation for perfect stereo tracking but with the facility to change stereo width during recording.

4.3 Spot Microphones

Very great care must be taken when using highlighting microphones within a stereo sound picture. When directional microphones are used, problems include blasting and proximity effects and image shift as the sound source (soloist) moves. Even an omnidirectional microphone can suffer off-axis degradation at high frequencies. A 'spot' microphone can adversely affect the balance of the surrounding part of the sound stage and an insensitive engineer can easily make the microphone appear out of context with the overall stereo image. As the signal from the soloist's microphone arrives in the mix ahead of the basic pickup, one solution is to delay this signal 10-15ms with respect to the main signal: another is for just sufficient of this signal to be added to the mix to increase the presence of the soloist. Precise positioning of the 'spot' microphone within the overall picture is essential in order that the image does not shift with changing frequency and intensity.

When using the X-Y format, a crossed pair of omni-directional microphones with an included angle of 60°-90° provides a very stable image of the soloist without blasting or proximity and directionality effects, but with a well-defined sense of space. When using the M-S technique, further M-S pairs can be used as soloists' microphones: each subsidiary pair will be steered to its correct position within the sound stage, and its included angle will be less than that of the main pair.

So that maximum flexibility is maintained during post production, these spot microphones will be recorded on separate pairs of tracks on the tape.

For ENG/interview work it is perhaps legitimate to adopt a less purist approach without making too many compromises. A mono microphone may be mixed into the M channel ONLY, with the result that its image will take up a central position in the final L-R stereo presentation. During post production the width and ambience of the background may be changed but the balance between the M-S pair and the mono microphone remains fixed.

If a single M-S pair is used, the M microphone should be pointed between the interviewer and the interviewee. This technique will provide a more stable and coherent image than mixing into the M channel a microphone moving between sources -- and consequently with a changing background -- unless this microphone is so close to the source that its background pickup is negligible compared with the pickup of the M-S pair.

If an M-S microphone is too close to the sound source, small movements of the source lead to large changes in the angle of incidence and thus excessive movement in its position within the sound picture. This is true when the S signal has a high gain. Conflict occurs when the situation demands a close mic position for the sake of clarity.

In any circumstances a camera-mounted stereo microphone is quite impractical.

4.4 Near Coincident Microphone Techniques

These techniques provide good positional information together with a satisfying sense of space as they rely on both intensity and phase differences. The microphones are set close enough together to be effectively coincident at low frequencies and far enough apart for there to be a time delay between sounds from the left and right extremes of the sound source. Because of the spacing between the capsules, large image shifts can stem from quite small movements within the sound source, hence, close miking is not advisable. (Also, sounds arriving from the extremes of the sound source may cause problems when deriving a compatible mono signal and when disc cutting.)

There are four main near-coincident techniques.

The ORTF technique was developed by the French broadcasting organisation. Two cardioid microphones are spaced 7 inches apart with an included angle of 110°.

The NOB system was developed by the Dutch broadcasting organisation. Two cardioid microphones are spaced 12 inches apart with an included angle of 90°.

A system developed by Faulkner uses two forward-facing figure-of-eight microphones spaced 8 inches apart. The microphones are positioned further back from the sound source than is usual with other coincident techniques, and the results show many of the qualities of the Blumlein technique together with a natural balance between close and distant elements within the sound source.

The binaural technique was specially developed for listening to playback on headphones but the recordings are not very satisfactory when heard on loudspeakers. This system uses a 'dummy head', usually made from polystyrene, with omnidirectional microphones placed into the 'ears'. This technique provides excellent imaging in both horizontal and vertical planes. A development of the technique uses two omnidirectional or figure-of-eight microphones set approximately 3.5 inches on either side of a circular, non-reflective baffle. This allows sufficient 'leakage' between the microphones to make reproduction over loudspeakers a satisfying experience.

Although the use of omnidirectional microphones is rightly preferred, wherever possible, by many engineers, it is worth recalling a few of their frequently overlooked characteristics. They possess an excellent low-frequency response and, although fairly immune to wind and blasting effects, they are particularly adept at responding to traffic, air-conditioning plant and structure-borne vibrations. They provide a good sense of space and 'openness', but, for a given direct/reverberant sound ratio, they require the closest placement to the sound source. They have the maximum potential for pickup of unwanted sounds - although with minimum colouration.

When deciding upon an omnidirectional microphone, there is a choice to be made between the type which is designed to have a flat response to an on-axis signal (direct or free field) and the one designed to have a flat response to a reverberant sound field (random incidence or diffuse field), ie with an HF tip-up in the on-axis frequency response. The MKH20 contains treble accentuation circuitry permitting usage in both direct and diffuse sound fields but also gives the microphone a directional effect at high frequencies.

4.0 M-S MICROPHONE TECHNIQUES

4.5 The Matrix Process

Conventional left-right stereo signals may be produced directly, e.g. by using X-Y techniques or indirectly, e.g. by using M-S techniques. In the latter case, the signals have to undergo a further process variously called matrixing, encoding or decoding. The matrix amplifier adds and subtracts the M and the S signals - after hard sums, [M+S=L] and [M-S=R]. If the positive lobe of the figure-of-eight microphone is to the right, then [M+S=R] and [M-S=L].

If these left and right signals are now added to derive the equivalent mono signal, easy sums show that [L+R=2M]. If the matrix amplifier is used for this process, then automatically [L-R=2S]. In other words, an existing L-R signal can be matrixed to M-S and then subjected to any treatment which is applicable to M-S signals -- manipulation of width of image, ambience etc. for the FINAL L-R presentation. This is the only way of effecting such changes on L-R signals. During X-Y recording, such changes have to be made by repositioning the microphone pair.

When the signal is in M-S format, a narrower stereo spread is achieved by increasing the M component. (Increasing the M component is preferable to decreasing the S component provided that other parameters are not compromised.) If a wider stereo spread is required, the S component is increased -- this also has the effect of altering perspective and ambient content and without affecting the mono signal. To steer the output of an M-S pair to any position within the final stereo picture, the outputs of the matrix amplifier are mixed, differentially, into the main stereo L.R. signal.

In a situation where several M-S pairs cover the sound stage, the S level control can be used to reduce to narrow stereo (or even mono) in times of trouble or when making difficult cross-fades between pairs of microphones.

If a mono signal is to be derived from fully modulated left and right signals, sample addition will result in over-modulation of the mono channel due to the increase in level caused by centrally situated signals. Some engineers reduce this resultant level by 3dB and some by 6dB. A 3dB loss is built into the SUM position of the monitor selector.

4.6 AD261 Matrix Amplifers

When requiring a M-S signal at the main outputs it should be considered as any conventional pair of signals: That is, if the 'M' signal is required on the LEFT OUTPUT set the appropriate channel pan control to 'L'. If the 'S' signal is required on the RIGHT OUTPUT, set its pan control to 'R'. Ensure that the 'S' switches are deselected (situated by the pan controls -2 & 4). This allows the M-S original to be recorded and processed at the post production stage. The signal can be monitored at the mixer by selecting the 'MAT' position on the MONITOR selector. This decodes the M-S original to a L-R format.

To send an unmatrixed original from the main outputs in L-R form; apply the 'M' microphone to the odd input and the 'S' microphone to the even, set the pan controls to centre and ensure the associated 'S' switch is ON. When monitoring at the headphone output in this setup the L-R signal can be heard in the 'ST' position. This is because the monitoring tap off points are from the outputs. (except the four PFL positions). Monitoring in the 'MAT position encodes the L-R output back to 'M' in the left ear and 'S' in the right.

4.0 M-S MICROPHONE TECHNIQUES

The recorded signal can be returned to the AD261 and matrixed via either the 10 way auxiliary socket or via the 1/4" inch jack socket (situated on the left panel of the mixer). The level of this signal can be varied by the screwdriver control 'RET LEVEL' situated on the top panel; the return signal is routed to the monitors by selecting RET on the DIR/RET switch, also on the top panel.

If the 'S' signal becomes reversed (perhaps by rotating the boom mic) the stereo image becomes disrupted. to redress this; operation of the relevant phase switch will rectify the situation.

5.0 SERVICING

5.1 Handling

The inherent strength of the mixer is reduced as soon as the back is removed. therefore care should be taken when picking the mixer up to avoid undue strain on sides and top.

5.2 Static Sensitive Precautions

CAUTION: This equipment contains CMOS and other semi-conductor devices that are sensitive to static discharge. These parts can be permanently damaged unless proper handling procedures are followed.

1. Use a static free workstation, i.e. an antistatic mat grounded via a high value resistor. Avoid all plastics or material likely to develop a static charge.
2. Ensure that your body is grounded before touching any static sensitive device, by using a wrist band grounded via a high value resistor.

5.3 Module Removal

The AD261 ENG Mixer has been designed on a modular construction therefore making maintenance and routine servicing of the mixer a simple task. The mixer case is opened by removal of the 6xM.3 screws holding the back panel in place, see Fig. 1. When the screws are removed the case will part enabling you to remove the battery connection cable and the case earth cable therefore giving easy access to the modules. The mixer electronics is divided into eight modules. These can be removed for servicing as follows:-

1. Meter Module: this module contains the electronics for either the PPM or VU meter drivers. This is easily removed by pulling the card vertically and sliding the meters out of their guides.
2. DC/DC Converter: this module generates the mixer and microphone powering. It is removed by firstly removing the steel cover held in position by 2xM2.5 screws, disconnecting the associated plugs and then removing the four corner screws to completely free the module.
3. Mic Amp: The four microphone amplifiers are each on independent modules and can be removed separately. Firstly remove the mic gain knob (push on type) then the mic switch gain knob (collet type). Next remove the gain pots retaining nut and finally remove the M2.5 screw securing the module to the Mother Board. (Note! to remove modules 3 & 4 first remove metal cover on converter. The modules should then be free to unplug from the motherboard.
4. Monitor Module: this module contains all the monitoring, selector and decoding electronics along with the 1K and 10K oscillators and also the headphone drive. To remove the module firstly remove the monitor gain and monitor selector knobs (collet type) and also the headphone jack retaining nut. Next remove screws fixing the 2 right angle brackets to the mother board. The module can then be removed from the case along with its associated board holding the headphone jack sockets. Once the module is clear of the case it is then possible to disconnect the auxiliary headphone socket connection cable from the unbalanced output module. This will enable you to remove the module completely.
5. Input Module Assembly: this module contains the 4 input XLR connectors and their associated mic powering, high pass filter and phase change switches. It is removed by

firstly disconnecting the connection cable to the mother board and then removing the 8 fixing screws holding the input connectors to the case. Disconnect the mic powering connector and the modules should be free to tilt and slide out of the side panel housing. Note; the meter module and the power supply module must be removed before the input connector module

6. Output Module: This module is situated between the meter module and the power supply module and contains the output driver circuits and the limiters. It is held in position by 3 plastic retaining clips attached to the mother board.
7. Unbalanced Output: This module contains the unbalanced output drivers and connection to the multiway sockets. It is removed by releasing the auxiliary return jack fixing nut and the self tap fixing screw in the top left hand corner. The module is then free to move away from the case to enable you to remove its associated connection cable.
8. Routing board: This module contains the pan pots, S control switches and the mixing amps. Firstly remove the Unbalanced Output assembly and then the four pan pot knobs (push on type), then release the pan pot fixing nut, pull the talkback mic from its retaining hole as the assembly is removed.

5.4 Component Removal & Replacement

Components that are soldered in place must be removed with care to avoid damage to the printed circuit board. As with all printed circuit boards with high component density small and fragile tracks and pads are used. Improper removal could lift these off the board necessitating a major repair.

To remove a defective component, first remove the solder from the mounting pad with a good quality vacuum desoldering tool. Ensure that the heat source is not allowed to dwell on the mounting pad as this can destroy the adhesive bonding the pad to the printed circuit board. Carefully isolate the component leg from the mounting pad. (It may be advisable to first cut the component legs to prevent stress on the other pads associated with the component.

As with removal, when replacing a component ensure that the soldering iron is not allowed to dwell too long on the component mounting pad and the device being replaced.

5.5 Adjustments & Calibration

The AD261 is designed to keep calibration to the minimum. However, there is a necessary amount of calibration that must be done. This is described below.

All controls are set at the factory against calibrated equipment traceable to National Standards and therefore the mixer should not require any adjustment by the customer. However, this may require checking due to routine servicing or if the customer has a particular desired setup. The instructions below will allow anyone with the appropriate equipment to calibrate the mixer to the required settings.

<u>To set Batt Test Indicator (62-026-021):</u>

With a variable dc voltage supply feeding Pin 4 (+V in) of power XLR adjust supply voltage to +10.3v. With BATT TEST switch on adjust VR1 to read at the bottom end of the BATT scale for PPM, or at the bottom end of the red scale for VU.

5.0 SERVICING

To set PPM meter (62-026-031)

The meter driver has three calibration controls, one for SET LEVEL and the other two for SET LAW. Firstly set all three pre-sets to their central position. Then with 0dB fed to the driver adjust VR1(4) until the zero calibration mark is achieved on the PPM The law associated with the upper and lower sections of the scale can then be adjusted using VR2(5) and VR3(6). VR2(5) is for calibrating above the zero mark and VR3(6) for the section below the zero. Setting the law is best carried out as follows:

BBC PPM:

(a) With 0dB feeding the driver adjust VR1(4) to give a reading of MARK 4. (b) Increase the signal to +8dB and adjust VR2(5) until meter reads MARK 6 Repeat 'a' and 'b' until readings are correct. (c) Lower signal level to -8dB and adjust VR3(6) until the meter reads MARK 2 Repeat 'a' and 'c' until readings are correct. Check calibration of all marks and adjust if necessary the respective pre-set associated with the error.

OTHER PPM

The procedure for these scales is identical to above except that the signal levels are set to match the appropriate scale markings.

To set VU meter (62-026-032):

With +4dBu on the output adjust VR1/VR2 (62-026-032) to read '0' on the meters.

To set DC/DC converter (62-026-025):

Monitor connector 104 with voltage meter and adjust VR1 to give +12.7v. Check 105 = -12.7v ~0.5v and 204 = +48v ~ 2.0v.

To set Oscillator level (62-026-025):

Set the output gain controls at maximum and switch tone to 1kHz & adjust VR2 to give +10dBu on the left output. Switch tone to 1kHz/10kHz and adjust VR1 to give +10dBu on the right output. Note: The tone alternates between 1k and 10k at approximately 3 second intervals. Note; when setting the oscillator.

To set Limiters (62-026-028):

With +10dBu at mixer outputs check that the dc voltage on the wipers of VR1/VR3 are in the range -2.5v to -3.5v and VR2/VR4 are in the range -1.5 to -2.5. With the Limiter switched off set the mixer to give 0dBu at the left and right outputs. Switch the limiter in and adjust VR2 (left) and VR4 (right) so that the output falls fractionally below 0dBu, (typically 0.1dB).

Switch the Limiter out and increase the level at left and right outputs to +9dBu and switch the limiter in.

Adjust VR1 (left) and VR3 (right) so that the level falls to +8dBu. Check the dc voltage on the wiper of the pre-sets is within range as indicated above. for good stereo matching the dc conditions on the preset wipers of the presets must match closely, i.e. VR2 and VR4 match as should VR1 and VR3.

With +9dB at the mixer outputs, switch the limiter in and check THD does not exceed 0.3%.

The attack and release times can be selected by the customer by the use of SW1 and SW2.

Note: slow attack, fast release is set at the factory (see Sheet AD.261.C.104).

6.0 TECHNICAL LIBRARY

Audio Developments Ltd.

DECLARATION OF CONFORMITY

We Audio Developments Limited, of:

Hall Lane,
Walsall Wood,
Walsall,
West Midlands.
WS9 9AU
ENGLAND.

Declare under our sole responsibility that the product:

AD 261 ENG Mixer, all variations.

To which this declaration relates is in conformity with the following; transposing harmonised standards

Directive	Name	Ref	Year
EMC Directive 89/336/EEC	Generic Emission Standard	BS EN 50081-1	1992
	Radiated Emissions	EN 55022 Class B	
	AC Mains Conducted Emissions*	EN 55022 Class B	
	Generic Immunity Standard	BS EN 50082-1	1992
	Radio Frequency EM Field, Unmodulated	IEC 801-3	
	ESD 8kV Air Discharge	IEC 801-2	
	Fast Transients	IEC 801-4	

and therefore is in conformity with the production requirements of Council Directives 89/336/EEC on the approximation of the laws of the member states relating to Electromagnetic Compatibility.

Signed..... Date 14·12·95

Name Roger F. Tromans Managing Director

*When used with AD100-09 PSU

DRG. No. AD. 261 .C. 101 SHT. 1 OF 1

DO NOT SCALE

PROJECTION:

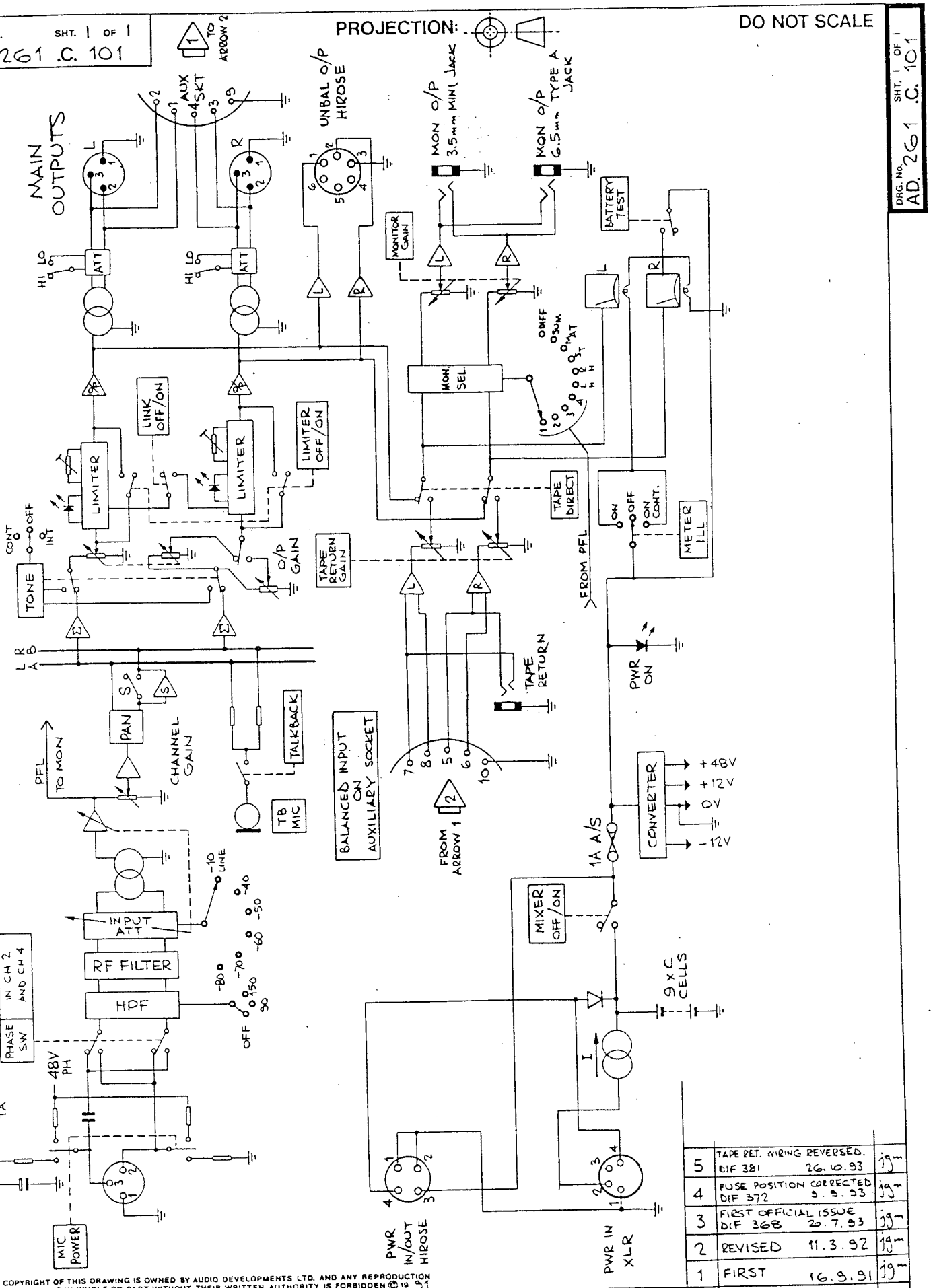

ISS.	REVISION/DATE	SIG.
5	TAPE RET. WIRING REVERSED. DIF 381 26.10.93	jgm
4	FUSE POSITION CORRECTED DIF 372 3.9.93	jgm
3	FIRST OFFICIAL ISSUE DIF 368 20.7.93	jgm
2	REVISED 11.3.92	jgm
1	FIRST 16.9.91	jgm

THE COPYRIGHT OF THIS DRAWING IS OWNED BY AUDIO DEVELOPMENTS LTD. AND ANY REPRODUCTION OF THIS DRAWING IN WHOLE OR PART WITHOUT THEIR WRITTEN AUTHORITY IS FORBIDDEN © 19 91

DRAWN	jgm
CHECKED/APP'D.	RFT
SCALE	N/A
P.C.B. No.	N/A

TITLE: BLOCK DIAGRAM

Audio Developments Ltd.
Hall Lane, Walsall Wood, Walsall.
West Midlands, WS9 9AU. England
Tel. Brownhills (0543) 375351

P.T. No. N/A

DRG. No. AD. 261 .C. 101 SHT. 1 OF 1

MY(3)203628 R

DRG. No. AD. 261 .C. 101 SHT. 1 OF 1

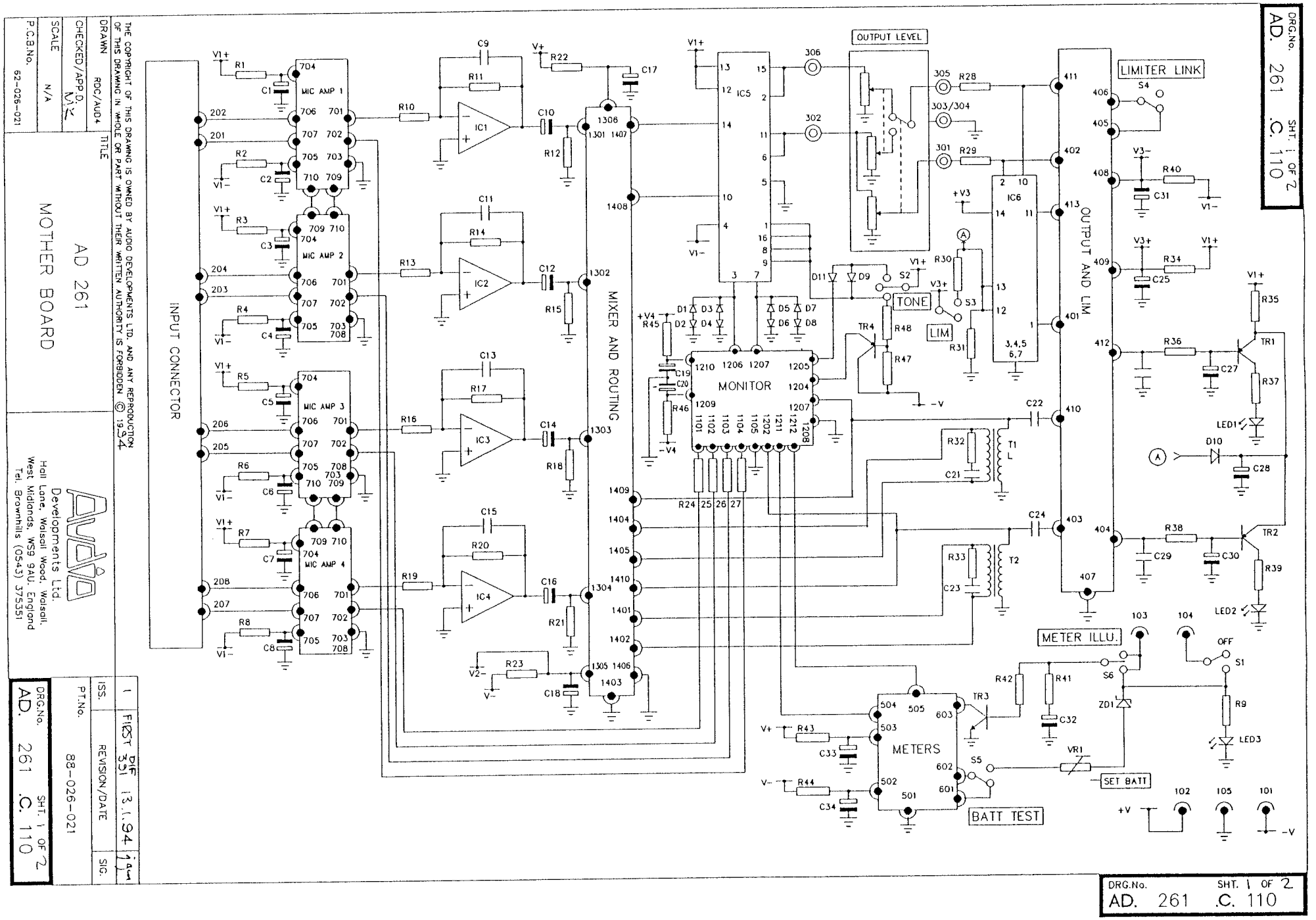
DRG.No. AD. 261 .C. 110 SHT. 1 OF 2
THE COPYRIGHT OF THIS DRAWING IS OWNED BY AUDIO DEVELOPMENTS LTD. AND ANY REPRODUCTION OF THIS DRAWING IN WHOLE OR PART WITHOUT THEIR WRITTEN AUTHORITY IS FORBIDDEN. © 1994
DRAWN RDC/AUD4
CHECKED/APP'D. MJC
SCALE N/A
P.C.B.No. 62-026-021
TITLE
AD 261
MOTHER BOARD
Audio Developments Ltd.
Hall Lane, Walsall Wood, Walsall.
West Midlands, WS9 9AU. England
Tel. Brownhills (0543) 375351
ISS. 1
REVISION/DATE FIRST DIF 331 13.1.94
SIG. jm
PT.No. 88-026-021
DRG.No. AD. 261 .C. 110 SHT. 1 OF 2
INPUT CONNECTOR
MIC AMP 1
MIC AMP 2
MIC AMP 3
MIC AMP 4
MIXER AND ROUTING
MONITOR
OUTPUT LEVEL
TONE
LIM
OUTPUT AND LIM.
LIMITER LINK
METERS
METER ILLU.
BATT TEST
SET BATT
IC1
IC2
IC3
IC4
IC5
IC6
TR1
TR2
TR3
TR4
T1
T2
LED1
LED2
LED3
D10
ZD1
VR1
S1
S2
S3
S4
S5
S6
OFF
+V
-V
V+
V-
V1+
V1-
V2-
V3+
V3-
+V3
+V4
-V4
DRG.No. AD. 261 .C. 110 SHT. 1 OF 2

DRG. No. AD. 261 .C. 310 SHT. 1 OF 5

PROJECTION:

DO NOT SCALE

DRG. No. AD. 261 .C. 310 SHT. 1 OF 5

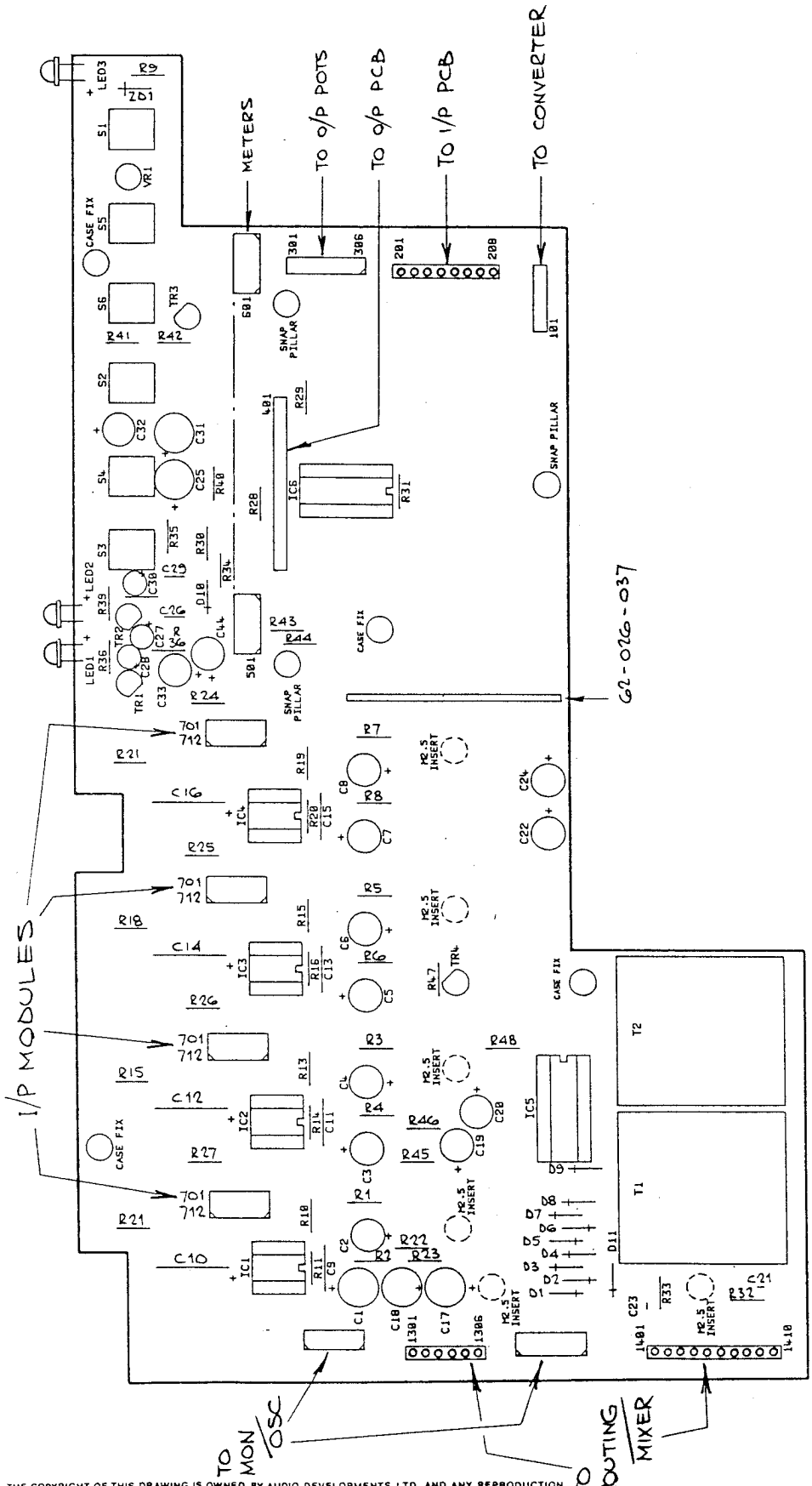

THE COPYRIGHT OF THIS DRAWING IS OWNED BY AUDIO DEVELOPMENTS LTD. AND ANY REPRODUCTION OF THIS DRAWING IN WHOLE OR PART WITHOUT THEIR WRITTEN AUTHORITY IS FORBIDDEN © 1993

ISS.	REVISION/DATE	SIG.
2	ISS 2 PCB REDRAW DIF 363 29.6.93	jg~
1	FIRST DIF 294 13.7.92	jg~

DRAWN jg~

CHECKED/APP'D. MK

SCALE 120%

P.C.B. No. 62-026-021

TITLE: MOTHER BOARD

Audio Developments Ltd.
Hall Lane, Walsall Wood, Walsall.
West Midlands, WS9 9AU. England
Tel. Brownhills (0543) 375351

PT. No. 88-026-021

DRG. No. AD. 261 .C. 310 SHT. 1 OF 5

MY(3)201628 R

DRG.No. AD. 261 SHT. 3 OF 5 .D. 310

REF.	VALUE	DESCRIPTION	PART No.
RESISTORS			
R1	220R	Metal Film 1/8W 1%	70-031-056
R2	220R	Metal Film 1/8W 1%	70-031-056
R3	220R	Metal Film 1/8W 1%	70-031-056
R4	220R	Metal Film 1/8W 1%	70-031-056
R5	220R	Metal Film 1/8W 1%	70-031-056
R6	220R	Metal Film 1/8W 1%	70-031-056
R7	220R	Metal Film 1/8W 1%	70-031-056
R8	220R	Metal Film 1/8W 1%	70-031-056
R9	47K	Metal Film 1/8W 1%	70-031-112
R10	68K	Metal Film 1/8W 1%	70-031-116
R11	100K	Metal Film 1/8W 1%	70-031-120
R12	100K	Metal Film 1/8W 1%	70-031-120
R13	68K	Metal Film 1/8W 1%	70-031-116
R14	100K	Metal Film 1/8W 1%	70-031-120
R15	100K	Metal Film 1/8W 1%	70-031-120
R16	68K	Metal Film 1/8W 1%	70-031-116
R17	100K	Metal Film 1/8W 1%	70-031-120
R18	100K	Metal Film 1/8W 1%	70-031-120
R19	68K	Metal Film 1/8W 1%	70-031-116
R20	100K	Metal Film 1/8W 1%	70-031-120
R21	100K	Metal Film 1/8W 1%	70-031-120
R22	100R	Metal Film 1/8W 1%	70-031-048
R23	100R	Metal Film 1/8W 1%	70-031-048
R24	100R	Metal Film 1/8W 1%	70-031-048
R25	100R	Metal Film 1/8W 1%	70-031-048
R26	100R	Metal Film 1/8W 1%	70-031-048
R27	100R	Metal Film 1/8W 1%	70-031-048
R28	47K	Metal Film 1/8W 1%	70-031-112
R29	47K	Metal Film 1/8W 1%	70-031-112
R30	100R	Metal Film 1/8W 1%	70-031-048
R31	100K	Metal Film 1/8W 1%	70-031-120
R32	1K	Metal Film 1/8W 1%	70-031-072
R33	1K	Metal Film 1/8W 1%	70-031-072
R34	33R	Metal Film 1/8W 1%	70-031-036
R35	150K	Metal Film 1/8W 1%	70-031-124
R36	220K	Metal Film 1/8W 1%	70-031-128
R37	4K7	Metal Film 1/8W 1%	70-031-088
R38	220K	Metal Film 1/8W 1%	70-031-128
R39	4K7	Metal Film 1/8W 1%	70-031-088
R40	33R	Metal Film 1/8W 1%	70-031-036
R41	1K	Metal Film 1/8W 1%	70-031-072
R42	10K	Metal Film 1/8W 1%	70-031-096
R43	100R	Metal Film 1/8W 1%	70-031-048
R44	100R	Metal Film 1/8W 1%	70-031-048
R45	47R	Metal Film 1/8W 1%	70-031-040
R46	47R	Metal Film 1/8W 1%	70-031-040
R47	47K	Metal Film 1/8W 1%	70-031-112
R48	47K	Metal Film 1/8W 1%	70-031-112
CAPACITORS			
C1	330uF 16V	Electolytic Radial	18-013-219
C2	330uF 16V	Electolytic Radial	18-013-219
C3	330uF 16V	Electolytic Radial	18-013-219
C4	330uF 16V	Electolytic Radial	18-013-219
C5	330uF 16V	Electolytic Radial	18-013-219
C6	330uF 16V	Electolytic Radial	18-013-219
C7	330uF 16V	Electolytic Radial	18-013-219
C8	330uF 16V	Electolytic Radial	18-013-219
C9	10pF 160V	Polystyrene Axial	18-060-308
C10	10uF 16V	Electolytic Radial	18-015-213
C11	10pF 160V	Polystyrene Axial	18-060-308

ISS	REVISION	SIG.
3	COMPONENT VALUE MODS. DIF 760 6.9.96	jgm
2	SEE DIF480	3.10.94 jgm
1	FIRST DIF 391	10.1.94 jgm

THE COPYRIGHT OF THIS DRAWING IS OWNED BY AUDIO DEVELOPMENTS LTD. AND ANY REPRODUCTION OF THIS DRAWING IN WHOLE OR PART WITHOUT THEIR WRITTEN AUTHORITY IS FORBIDDEN © 1994

DRAWN RDC/AUD18

CHECKED/APP.D. MK

SCALE N/A

P.C.B.No. N/A

TITLE

STEREO ENG MIXER

MOTHER BOARD

Audio Developments Ltd.
Hall Lane, Walsall Wood, Walsall.
West Midlands, WS9 9AU. England
Tel. Brownhills (0543) 375351

ISS. REVISION/DATE SIG.

PT.No. 88-026-021

DRG.No. AD. 261 SHT. 3 OF 5 .D. 310

REF.	VALUE	DESCRIPTION	PART No.
CAPACITORS			
C12	10uF 16V	Electrolytic Radial	18-015-213
C13	10pF 160V	Polystyrene Axial	18-060-308
C14	10uF 16V	Electrolytic Radial	18-015-213
C15	10pP 160V	Polystyrene Axial	18-060-308
C16	10uF 16V	Electrolytic Radial	18-015-213
C17	330uF 16V	Electrolytic Radial	18-013-219
C18	330uF 16V	Electrolytic Radial	18-013-219
C19	330uF 16V	Electrolytic Radial	18-013-219
C20	330uF 16V	Electrolytic Radial	18-013-219
C21	2,200pF 50V	Ceramic Disc	18-001-241
C22	470uF 10V	Electrolytic Radial	18-013-120
C23	2,200pF 50V	Ceramic Disc	18-001-241
C24	470uF 10V	Electrolytic Radial	18-013-120
C25	330uF 16V	Electrolytic Radial	18-013-219
C26	0.47uF 63V	Polystyrene Radial	18-045-019
C27	1uF 16V	Electrolytic Radial	18-015-507
C28	10uF 16v	Electrolytic Radial	18-015-213
C29	0.47uF 63V	Polystyrene Radial	18-045-019
C30	1uF 16V	Electrolytic Radial	18-015-507
C31	330uF 16V	Electrolytic Radial	18-013-219
C32	330uF 16V	Electrolytic Radial	18-013-219
C33	330uF 16V	Electrolytic Radial	18-013-219
C34	330uF 16V	Electrolytic Radial	18-013-219
DIODES			
D1	IN4148	HI/S.D035	72-010-001
D2	IN4148	HI/S.D035	72-010-001
D3	IN4148	HI/S.D035	72-010-001
D4	IN4148	HI/S.D035	72-010-001
D5	IN4148	HI/S.D035	72-010-001
D6	IN4148	HI/S.D035	72-010-001
D7	IN4148	HI/S.D035	72-010-001
D8	IN4148	HI/S.D035	72-010-001
D9	IN4148	HI/S.D035	72-010-001
D10	IN4148	HI/S.D035	72-010-001
D11	IN4148	HI/S.D035	72-010-001
ZENER DIODES			
ZD1	5V6	400mW	72-012-110
TRANSISTORS			
TR1	BC559B	PNP TO-92	72-022-001
TR2	BC559B	PNP TO-92	72-022-001
TR3	BC549C	NPN TO-92	72-021-001
TR4	BC559B	PNP TO-92	72-022-001
INTEGRATED CIRCUITS			
IC1	TL061CP	OP.AMP	74-120-001
IC2	TL061CP	OP.AMP	74-120-001
IC3	TL061CP	OP.AMP	74-120-001
IC4	TL061CP	OP.AMP	74-120-001
IC5	DG413	Quad SPST S/W	74-020-002
IC6	4066B	Bilateral S/W	74-030-002

THE COPYRIGHT OF THIS DRAWING IS OWNED BY AUDIO DEVELOPMENTS LTD. AND ANY REPRODUCTION OF THIS DRAWING IN WHOLE OR PART WITHOUT THEIR WRITTEN AUTHORITY IS FORBIDDEN © 1994

ISS.	REVISION/DATE	SIG.
1	FIRST DIF 391 10.1.94	jgm

DRAWN RDC/AUD19
CHECKED/APP.D. MK
SCALE N/A
P.C.B.No. N/A

TITLE
STEREO ENG MIXER
MOTHER BOARD

Audio Developments Ltd.
Hall Lane, Walsall Wood, Walsall.
West Midlands, WS9 9AU. England
Tel. Brownhills (0543) 375351

PT.No. 88-026-021

DRG.No. AD. 261 SHT.4 OF 5 .D. 310

REF.	VALUE	DESCRIPTION	PART No.
VARIABLE RESISTORS			
VR1	500K	Cermet	32-050-074
LEDS			
LED1	YELLOW	3mm Itensity Matched	40-123-001
LED2	GREEN	3mm Itensity Matched	40-133-001
LED3	RED	3mm Itensity Matched	40-113-001
SWITCHES			
S1	ON-NONE-ON	T101 Tiny Toggle	81-117-702
S2	ON-OFF-ON	T103 Tiny Toggle	81-127-702
S3	ON-NONE-ON	T101 Tiny Toggle	81-117-702
S4	ON-NONE-ON	T101 Tiny Toggle	81-117-702
S5	ON-NONE-MOM	T108 Tiny Toggle	81-157-702
S6	ON-OFF-MOM	T107 Tiny Toggle	81-147-702
TRANSFORMERS			
T1		ZF8313	86-010-501
T2		ZF8313	86-010-501
PRINTED CIRCUIT BOARD			
	AD261	MOTHER BOARD	62-026-021

DRG.No. AD. 261 SHT. OF .D. 310

THE COPYRIGHT OF THIS DRAWING IS OWNED BY AUDIO DEVELOPMENTS LTD. AND ANY REPRODUCTION OF THIS DRAWING IN WHOLE OR PART WITHOUT THEIR WRITTEN AUTHORITY IS FORBIDDEN © 1994

ISS.	REVISION/DATE	SIG.
1	FIRST DIF 391 10.1.94	jgm

DRAWN RDC/AUD20
CHECKED/APP.D. MK
SCALE N/A
P.C.B.No. N/A

TITLE
STEREO ENG MIXER
MOTHER BOARD

Audio Developments Ltd.
Hall Lane, Walsall Wood, Walsall.
West Midlands, WS9 9AU. England
Tel. Brownhills (0543) 375351

PT.No. 88-026-021

DRG.No. AD. 261 SHT. 5 OF 5 .D. 310

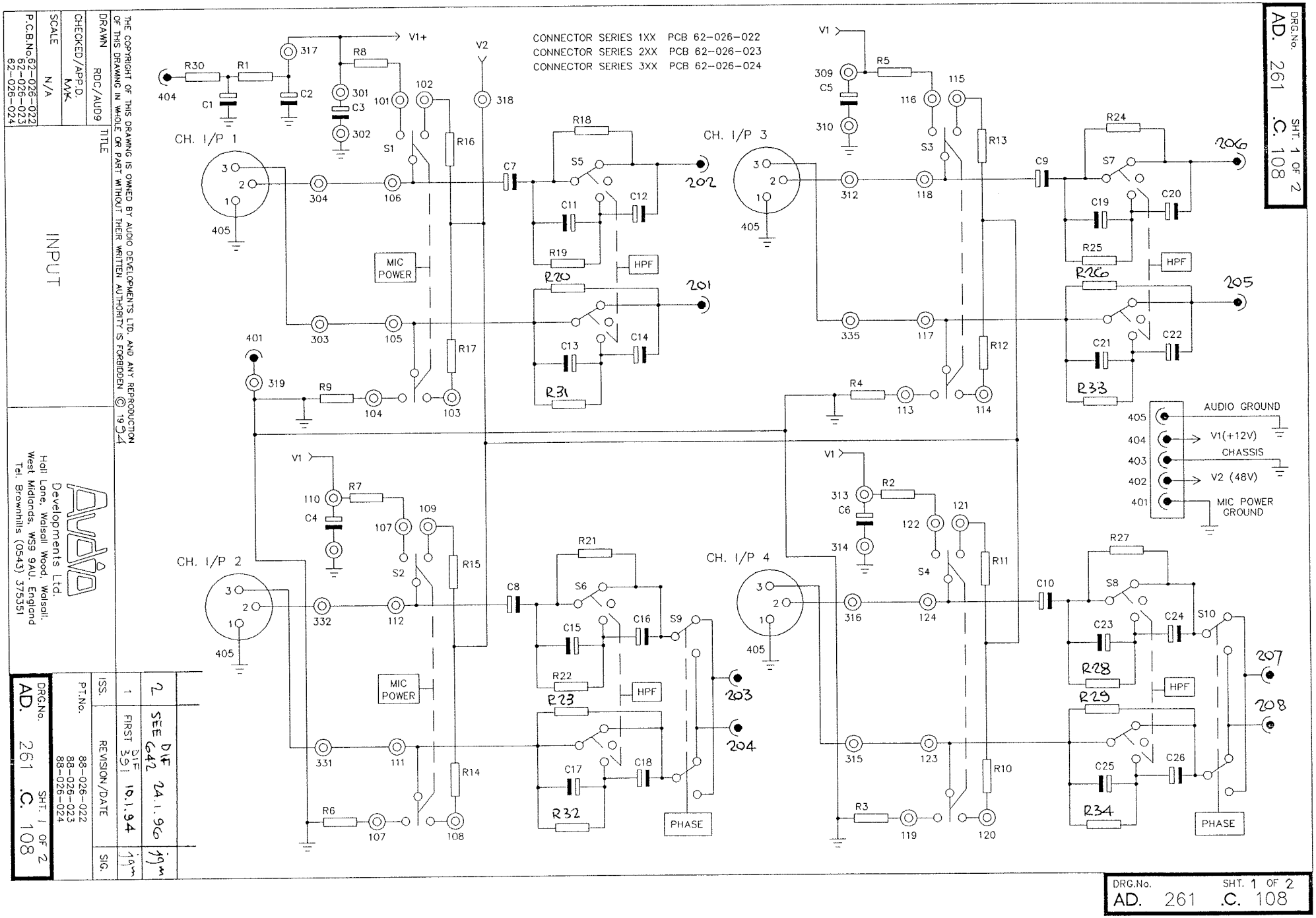

THE COPYRIGHT OF THIS DRAWING IS OWNED BY AUDIO DEVELOPMENTS LTD. AND ANY REPRODUCTION OF THIS DRAWING IN WHOLE OR PART WITHOUT THEIR WRITTEN AUTHORITY IS FORBIDDEN © 1994

DRAWN RDC/AUD9
CHECKED/APP.D. MK
SCALE N/A
P.C.B.No 62-026-022 62-026-023 62-026-024

TITLE: INPUT

Audio Developments Ltd.
Hall Lane, Walsall Wood, Walsall.
West Midlands, WS9 9AU. England
Tel. Brownhills (0543) 375351

ISS.	REVISION/DATE	SIG.
1	FIRST DIF 391 10.1.94	jgm
2	SEE DIF 642 24.1.96	jgm

PT.No. 88-026-022 88-026-023 88-026-024

DRG.No. AD. 261 .C. 108 SHT. 1 OF 2

DRG.No. AD. 261 .C. 108 SHT. 1 OF 2

DRG. No. AD. 261 .D. 308 SHT. 1 OF 9

PROJECTION

DO NOT SCALE

DRG. No. AD. 261 .D. 308 SHT. 1 OF 9

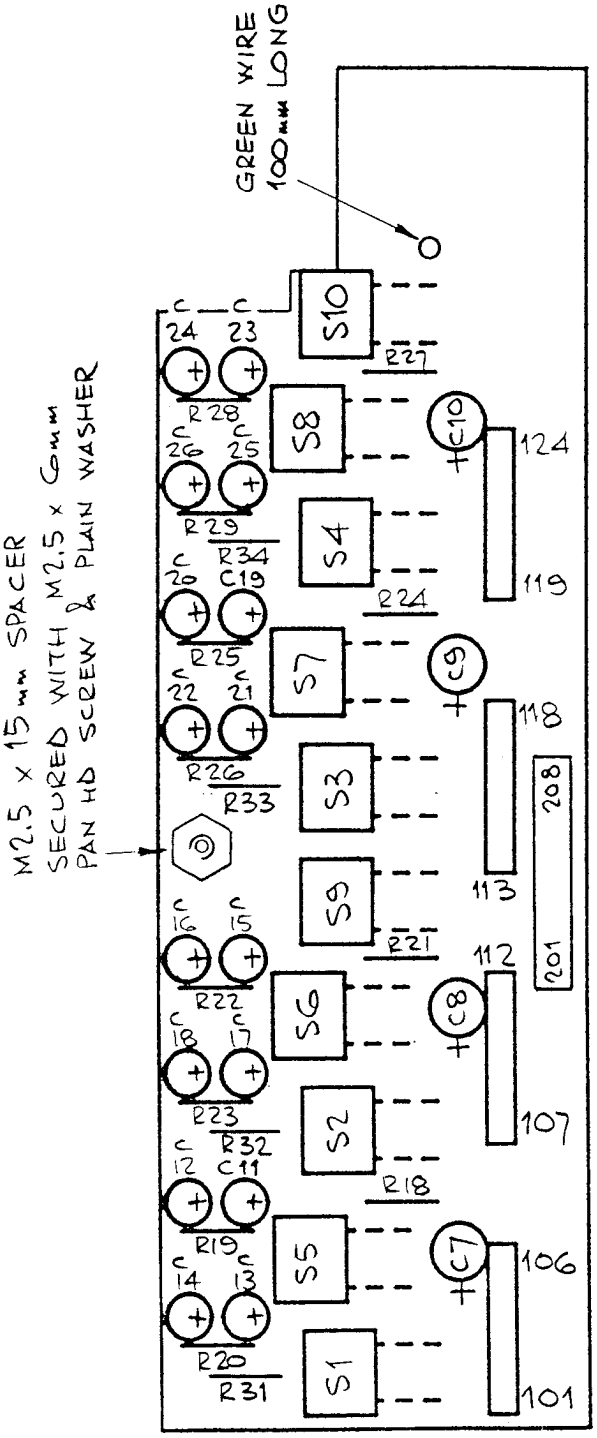

THE COPYRIGHT OF THIS DRAWING IS OWNED BY AUDIO DEVELOPMENTS LTD. AND ANY REPRODUCTION OF THIS DRAWING IN WHOLE OR PART WITHOUT THEIR WRITTEN AUTHORITY IS FORBIDDEN © 1993

ISS.	REVISION/DATE	SIG.
1	FIRST DTF 391 10.1.94	jgm

DRAWN jgm

CHECKED/APP'D.

SCALE 150%

P.C.B. No. 62-026-022

TITLE: INPUT SWITCH BOARD

Audio Developments Ltd.
Hall Lane, Walsall Wood, Walsall.
West Midlands, WS9 9AU. England
Tel. Brownhills (0543) 375351

PART No. 88-026-022

DRG. No. AD. 261 .D. 308 SHT. 1 OF 9

MY (1) 319076 R

DRG.No. AD. 261 SHT. 3 OF 9 .C. 308

REF.	VALUE	DESCRIPTION	PART No.
RESISTORS			
R18	100K	Metal Film 1/8W 1%	70-031-120
R19	100K	Metal Film 1/8W 1%	70-031-120
R20	100K	Metal Film 1/8W 1%	70-031-120
R21	100K	Metal Film 1/8W 1%	70-031-120
R22	100K	Metal Film 1/8W 1%	70-031-120
R23	100K	Metal Film 1/8W 1%	70-031-120
R24	100K	Metal Film 1/8W 1%	70-031-120
R25	100K	Metal Film 1/8W 1%	70-031-120
R26	100K	Metal Film 1/8W 1%	70-031-120
R27	100K	Metal Film 1/8W 1%	70-031-120
R28	100K	Metal Film 1/8W 1%	70-031-120
R29	100K	Metal Film 1/8W 1%	70-031-120
R31	100K	Metal Film 1/8W 1%	70-031-120
R32	100K	Metal Film 1/8W 1%	70-031-120
R33	100K	Metal Film 1/8W 1%	70-031-120
R34	100K	Metal Film 1/8W 1%	70-031-120
CAPACITORS			
C7	100uF 25V	Electrolytic Radial	18-013-316
C8	100uF 25V	Electrolytic Radial	18-013-316
C9	100uF 25V	Electrolytic Radial	18-013-316
C10	100uF 25V	Electrolytic Radial	18-013-316
C11	2.2uF 50V	Electrolytic Radial	18-015-509
C12	1.5uF 50V	Electrolytic Radial	18-015-508
C13	2.2uF 50V	Electrolytic Radial	18-015-509
C14	1.5uF 50V	Electrolytic Radial	18-015-508
C15	2.2uF 50V	Electrolytic Radial	18-015-509
C16	1.5uF 50V	Electrolytic Radial	18-015-508
C17	2.2uF 50V	Electrolytic Radial	18-015-509
C18	1.5uF 50V	Electrolytic Radial	18-015-508
C19	2.2uF 50V	Electrolytic Radial	18-015-509
C20	1.5uF 50V	Electrolytic Radial	18-015-508
C21	2.2uF 50V	Electrolytic Radial	18-015-509
C22	1.5uF 50V	Electrolytic Radial	18-015-508
C23	2.2uF 50V	Electrolytic Radial	18-015-509
C24	1.5uF 50V	Electrolytic Radial	18-015-508
C25	2.2uF 50V	Electrolytic Radial	18-015-509
C26	1.5uF 50V	Electrolytic Radial	18-015-508
SWITCHES			
S1	ON-OFF-ON	T203 Tiny Toggle	81-227-302
S2	ON-OFF-ON	T203 Tiny Toggle	81-227-302
S3	ON-OFF-ON	T203 Tiny Toggle	81-227-302
S4	ON-OFF-ON	T203 Tiny Toggle	81-227-302
S5	ON-OFF-ON	T203 Tiny Toggle	81-227-302
S6	ON-OFF-ON	T203 Tiny Toggle	81-227-302
S7	ON-OFF-ON	T203 Tiny Toggle	81-227-302
S8	ON-OFF-ON	T203 Tiny Toggle	81-227-302
S9	ON-NONE-ON	T201 Tiny Toggle	81-217-302
S10	ON-NONE-ON	T201 Tiny Toggle	81-217-302
PRINTED CIRCUIT BOARD			
	AD261	INPUT SWITCH BOARD	62-026-022

THE COPYRIGHT OF THIS DRAWING IS OWNED BY AUDIO DEVELOPMENTS LTD. AND ANY REPRODUCTION OF THIS DRAWING IN WHOLE OR PART WITHOUT THEIR WRITTEN AUTHORITY IS FORBIDDEN © 1994

ISS.	REVISION/DATE	SIG.
1	DIF FIRST 391 10.1.94	jgm

DRAWN RDC/AUD35

CHECKED/APP.D. MK

SCALE N/A

P.C.B.No. N/A

TITLE

STEREO ENG MIXER

INPUT

Audio Developments Ltd.
Hall Lane, Walsall Wood, Walsall.
West Midlands, WS9 9AU. England
Tel. Brownhills (0543) 375351

PT.No. 88-026-022

DRG.No. AD. 261 SHT. 3 OF 9 .C. 308

DRG. No. AD.261.D.308 SHT.4 OF 9

PROJECTION

DO NOT SCALE

DRG. No. AD.261.D.308 SHT.4 OF 9

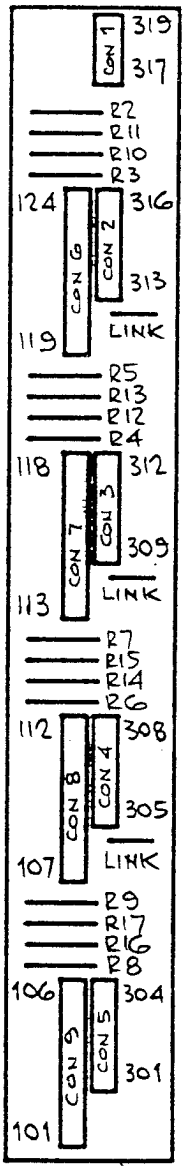

THE COPYRIGHT OF THIS DRAWING IS OWNED BY AUDIO DEVELOPMENTS LTD AND ANY REPRODUCTION OF THIS DRAWING IN WHOLE OR PART WITHOUT THEIR WRITTEN AUTHORITY IS FORBIDDEN © 1993

ISS.	REVISION/DATE	SIG.
1	FIRST DIF 391 10.1.94	jgm

DRAWN jgm

CHECKED/APP'D. R

SCALE 150%

P.C.B. No. 62-026-023

TITLE: INPUT CON. LINK BOARD

Audio Developments Ltd.
Hall Lane, Walsall Wood, Walsall.
West Midlands, WS9 9AU. England
Tel. Brownhills (0543) 375351

PART No. 88-026-023

DRG. No. AD.261.D.308 SHT. 4 OF 9

MY (1) 319076 R

DRG.No. AD. 261 SHT. 6 OF 9 .C. 308

REF.	VALUE	DESCRIPTION	PART No.
RESISTORS			
R2	180R	Metal Film 1/8W 1%	70-031-054
R3	180R	Metal Film 1/8W 1%	70-031-054
R4	180R	Metal Film 1/8W 1%	70-031-054
R5	180R	Metal Film 1/8W 1%	70-031-054
R6	180R	Metal Film 1/8W 1%	70-031-054
R7	180R	Metal Film 1/8W 1%	70-031-054
R8	180R	Metal Film 1/8W 1%	70-031-054
R9	180R	Metal Film 1/8W 1%	70-031-054
R10	6K8	Metal Film 1/8W 1%	70-031-092
R11	6K8	Metal Film 1/8W 1%	70-031-092
R12	6K8	Metal Film 1/8W 1%	70-031-092
R13	6K8	Metal Film 1/8W 1%	70-031-092
R14	6K8	Metal Film 1/8W 1%	70-031-092
R15	6K8	Metal Film 1/8W 1%	70-031-092
R16	6K8	Metal Film 1/8W 1%	70-031-092
R17	6K8	Metal Film 1/8W 1%	70-031-092
PRINTED CIRCUIT BOARD			
	AD261	INPUT LINK BOARD	62-026-023

THE COPYRIGHT OF THIS DRAWING IS OWNED BY AUDIO DEVELOPMENTS LTD. AND ANY REPRODUCTION OF THIS DRAWING IN WHOLE OR PART WITHOUT THEIR WRITTEN AUTHORITY IS FORBIDDEN © 1994

ISS.	REVISION/DATE	SIG.
1	FIRST DIF 391 10.1.94	

PT.No.

DRAWN RDC/AUD35

CHECKED/APP.D. MK

SCALE N/A

P.C.B.No. N/A

TITLE

STEREO ENG MIXER

INPUT

Audio Developments Ltd.
Hall Lane, Walsall Wood, Walsall.
West Midlands, WS9 9AU. England
Tel. Brownhills (0543) 375351

DRG.No. AD. 261 SHT. 6 OF 9 .C. 308

DRG. No. AD. 261 .D. 308 SHT. 7 OF 9

PROJECTION

DO NOT SCALE

DRG. No. AD. 261 .D. 308 SHT. 7 OF 9

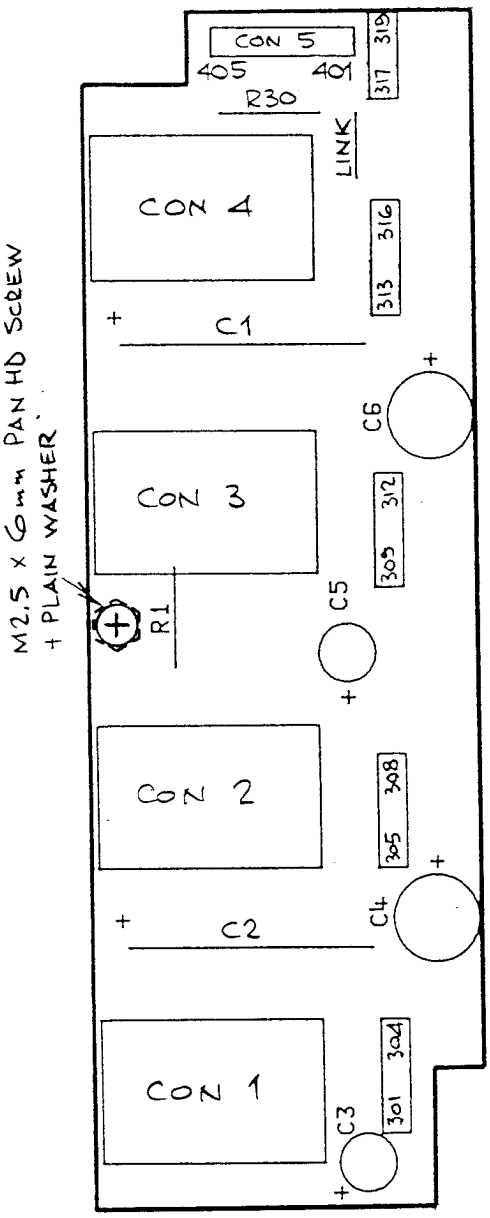

THE COPYRIGHT OF THIS DRAWING IS OWNED BY AUDIO DEVELOPMENTS LTD AND ANY REPRODUCTION OF THIS DRAWING IN WHOLE OR PART WITHOUT THEIR WRITTEN AUTHORITY IS FORBIDDEN © 19 93

ISS.	REVISION/DATE	SIG.
1	FIRST DIF 391 10.1.94	jgm

DRAWN jgm

CHECKED/APP'D SR

SCALE 150 %

P.C.B. No. 62-026-024

TITLE: INPUT CON. BOARD

Audio Developments Ltd.
Hall Lane, Walsall Wood, Walsall.
West Midlands, WS9 9AU. England
Tel. Brownhills (0543) 375351

PART No. 88-026-021

DRG. No. AD. 261 .D. 308 SHT. 7 OF 9

REF.	VALUE	DESCRIPTION	PART No.
RESISTORS			
R1	47R	Metal Film 1/8W 1%	70-031-440
R30	47R	Metal Film 1/8W 1%	70-031-440
CAPACITORS			
C1	220uF 16V	Electrolytic Axial	18-010-218
C2	220uF 16V	Electrolytic Axial	18-010-218
C3	220uF 16V	Electrolytic Radial	18-013-218
C4	220uF 16V	Electrolytic Radial	18-013-218
C5	220uF 16V	Electrolytic Radial	18-013-218
C6	220uF 16V	Electrolytic Radial	18-013-218
CONNECTORS			
CON1	XLR 3W	Female PC Mount Gold	25-013-527
CON2	XLR 3W	Female PC Mount Gold	25-013-527
CON3	XLR 3W	Female PC Mount Gold	25-013-527
CON4	XLR 3W	Female PC Mount Gold	25-013-527
PRINTED CIRCUIT BOARD			
	AD261	INPUT CONNECTOR BOARD	62-026-024

THE COPYRIGHT OF THIS DRAWING IS OWNED BY AUDIO DEVELOPMENTS LTD. AND ANY REPRODUCTION OF THIS DRAWING IN WHOLE OR PART WITHOUT THEIR WRITTEN AUTHORITY IS FORBIDDEN © 1994

ISS.	REVISION/DATE	SIG.
1	FIRST DIF 391 10.1.94	JJM

DRAWN RDC/AUD40
CHECKED/APP.D. MMC
SCALE N/A
P.C.B.No. N/A

TITLE
STEREO ENG MIXER
INPUT

Audio Developments Ltd.
Hall Lane, Walsall Wood, Walsall.
West Midlands, WS9 9AU. England
Tel. Brownhills (0543) 375351

PT.No. 88-026-022

DRG.No. AD. 261 SHT. 9 OF 9 .C. 308

DRG.No. AD. 261 SHT. 1 OF 2 .C. 105

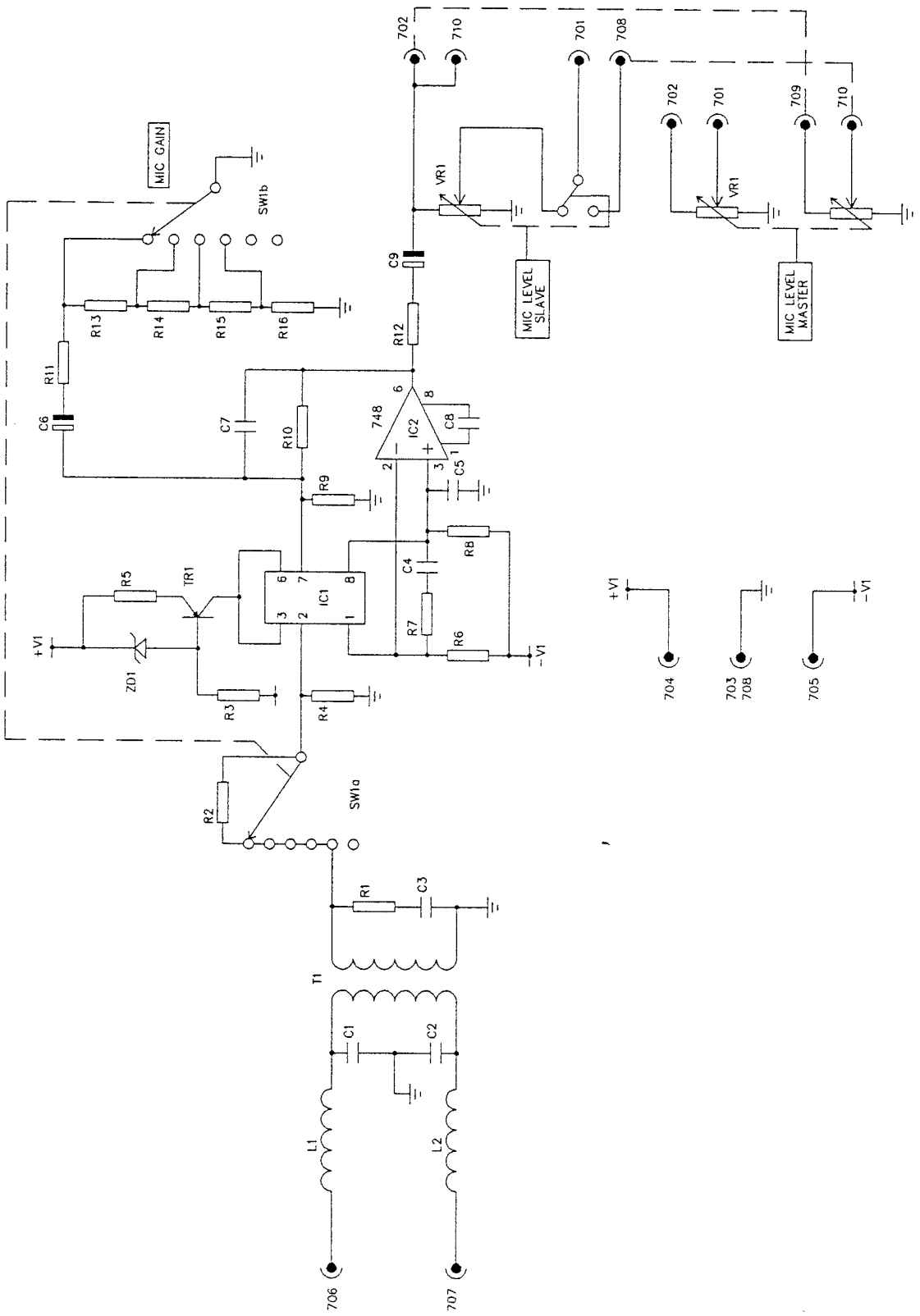

THE COPYRIGHT OF THIS DRAWING IS OWNED BY AUDIO DEVELOPMENTS LTD. AND ANY REPRODUCTION OF THIS DRAWING IN WHOLE OR PART WITHOUT THEIR WRITTEN AUTHORITY IS FORBIDDEN © 1994

DRAWN	RDC/AUD12	TITLE
CHECKED/APP.D.	MVK	MIC PRE-AMP
SCALE	N/A	
P.C.B.No.	62-026-026 62-026-027	

Audio Developments Ltd.
Hall Lane, Walsall Wood, Walsall.
West Midlands, WS9 9AU. England
Tel. Brownhills (0543) 375351

ISS.	REVISION/DATE	SIG.
1	FIRST DIF 391 10.1.94	jgm

PT.No. 88-026-026 MASTER
88-026-027 SLAVE

DRG.No. AD. 261 SHT. 1 OF 2 .C. 105

DRG. No. AD. 261 .D. 305 SHT. 1 OF 4

PROJECTION

DO NOT SCALE

DRG. No. AD. 261 .D. 305 SHT. 1 OF 4

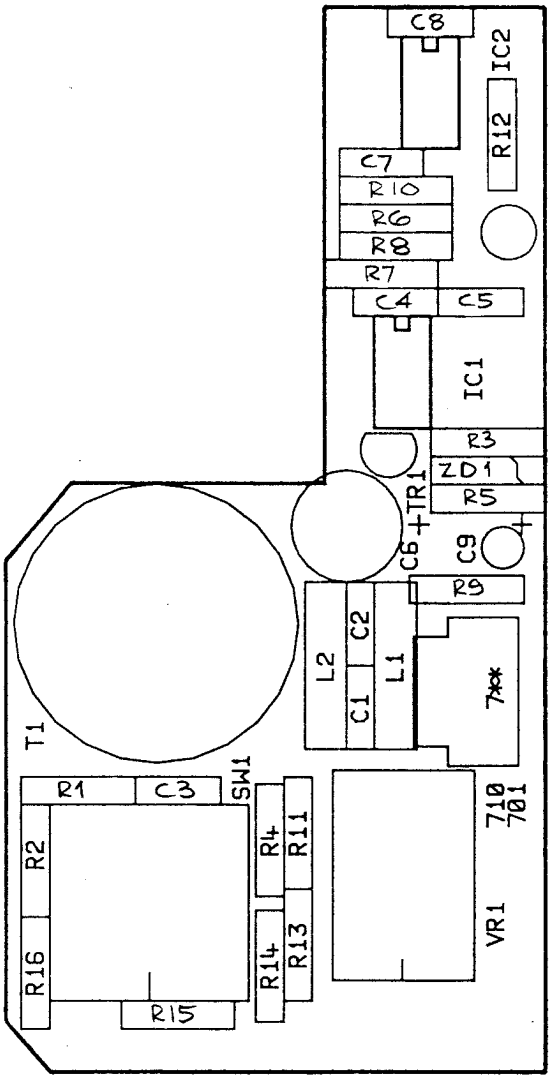

THE COPYRIGHT OF THIS DRAWING IS OWNED BY AUDIO DEVELOPMENTS LTD. AND ANY REPRODUCTION OF THIS DRAWING IN WHOLE OR PART WITHOUT THEIR WRITTEN AUTHORITY IS FORBIDDEN © 1997

ISS.	REVISION/DATE	SIG.
2	REDESIGNED/REDRAWN DIF 632 13.1.97	jgm

DRAWN jgm

CHECKED/APP'D APH

SCALE N/A

P.C.B. No. 62-026-026/027

TITLE: MIC AMP MASTER AND SLAVE BOARDS

Audio Developments Ltd.
Hall Lane, Walsall Wood, Walsall.
West Midlands, WS9 9AU. England
Tel. Brownhills (0543) 375351

PART No. 88-026-026/027

DRG. No. AD. 261 .D. 305 SHT. 1 OF 4

MY (1) 319076 R

REF.	VALUE	DESCRIPTION	PART No.
RESISTORS			
R1	15K	Metal Film 1/8W 1%	70-031-100
R2	200K	Metal Film 1/4W 1%	70-031-127
R3	22K	Metal Film 1/4W 1%	70-031-104
R4	6K2	Metal Film 1/4W 1%	70-031-091
R5	3K3	Metal Film 1/4W 1%	70-031-084
R6	22K	Metal Film 1/4W 1%	70-031-104
R7	510R	Metal Film 1/4W 1%	70-031-065
R8	22K	Metal Film 1/4W 1%	70-031-104
R9	470K	Metal Film 1/4W 1%	70-031-136
R10	11K	Metal Film 1/4W 1%	70-031-097
R11	33R	Metal Film 1/4W 1%	70-031-036
R12	100R	Metal Film 1/4W 1%	70-031-048
R13	68R	Metal Film 1/4W 1%	70-031-044
R14	220R	Metal Film 1/4W 1%	70-031-056
R15	680R	Metal Film 1/4W 1%	70-031-068
R16	3K6	Metal Film 1/4W 1%	70-031-085
CAPACITORS			
C1	2.2nF 50V	Ceramic Disc	18-001-241
C2	2.2nF 50V	Ceramic Disc	18-001-241
C3	2.2nF 50V	Ceramic Disc	18-001-241
C4	470pF 50V	Ceramic Disc	18-001-233
C5	220pF 50V	Ceramic Disc	18-001-229
C6	1000uF 10V	Electrolytic Radial	18-013-122
C7	220pF 50V	Ceramic Disc	18-001-229
C8	10pF 50V	Ceramic Disc	18-001-213
C9	22uF 16V	Electrolytic Radial	18-015-215
ZENER DIODES			
ZD1	2V4	400mW	72-012-101
TRANSISTORS			
TR1	BC559B	PNP TO-92	72-022-001
VARIABLE RESISTORS			
VR1	10K/10K LOG	Fitted To 62-026-026	52-219-314
VR1	10K LOG + SW	Fitted To 62-026-027	55-219-314
INTEGRATED CIRCUITS			
IC1	SSM2220	Matched PNP	74-120-017
IC2	LM748	Single OP.AMP	74-120-018
INDUCTORS			
L1	220µH	Choke (SC10) AXIAL	22-505-102
L2	220µH	Choke (SC10) AXIAL	22-505-102
SWITCHES			
S1	2P 6W	RS1 MBB R/A	82-265-401
TRANSFORMERS			
T1	1:1:7	X187C/2 MIC INPUT	86-010-104
PRINTED CIRCUIT BOARD			
	AD261	MIC AMP MASTER PCB	62-026-026
	AD261	MIC AMP SLAVE PCB	62-026-027

THE COPYRIGHT OF THIS DRAWING IS OWNED BY AUDIO DEVELOPMENTS LTD. AND ANY REPRODUCTION OF THIS DRAWING IN WHOLE OR PART WITHOUT THEIR WRITTEN AUTHORITY IS FORBIDDEN © 1994

ISS.	REVISION/DATE	SIG.
2	SEE DIF 568 11.3.96	jgm
1	FIRST DIF 391 10.1.94	jgm

DRAWN RDC/AUD30
CHECKED/APP.D. MK
SCALE N/A
P.C.B.No. N/A

TITLE
STEREO ENG MIXER
MIC PRE-AMP

Audio Developments Ltd.
Hall Lane, Walsall Wood, Walsall.
West Midlands, WS9 9AU. England
Tel. Brownhills (0543) 375351

PT.No. 88-026-026
88-026-027

DRG.No. AD. 261 SHT. 1 OF 4 .D. 102

DRG.No. AD. 261 SHT. 1 OF 4 .D. 102

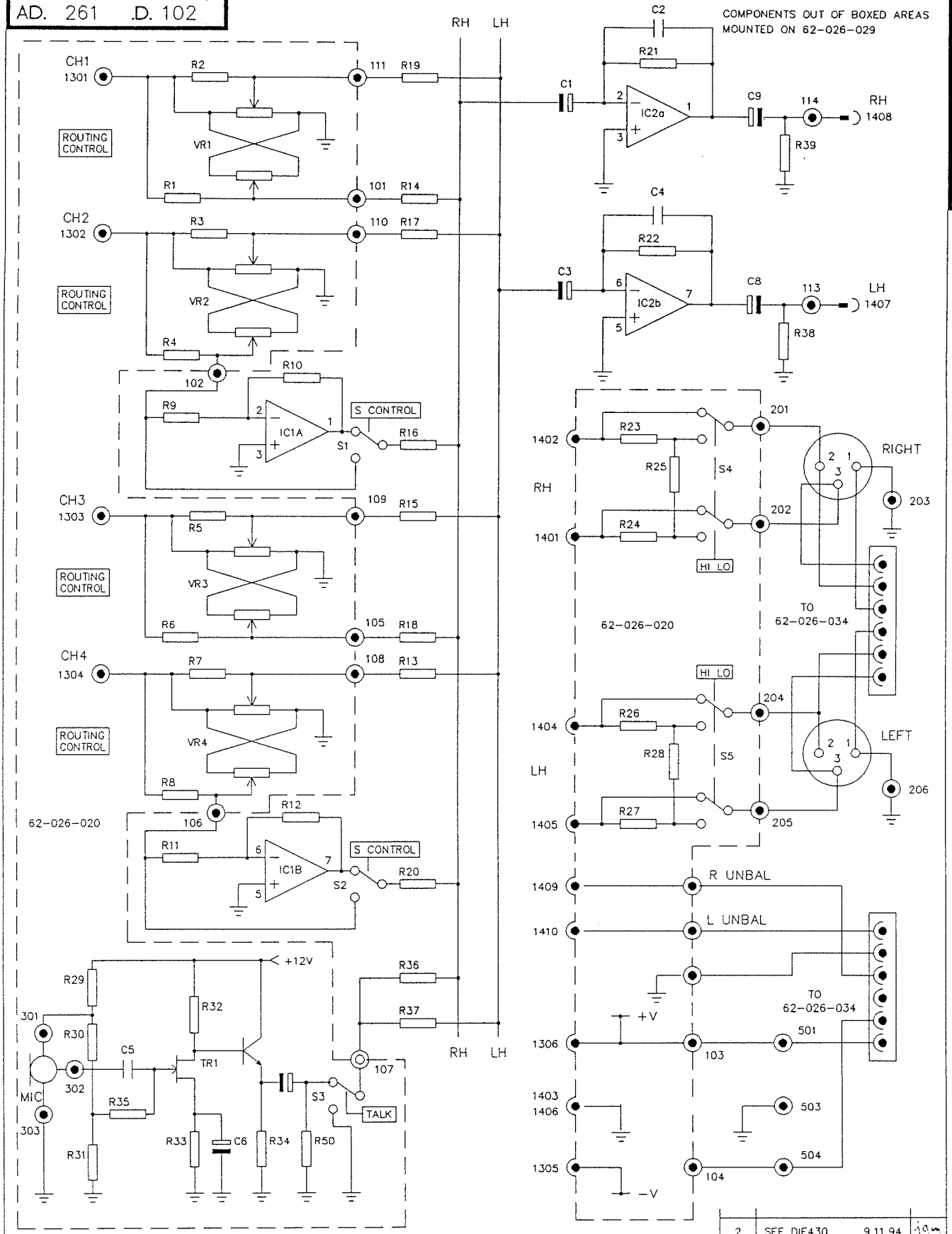

THE COPYRIGHT OF THIS DRAWING IS OWNED BY AUDIO DEVELOPMENTS LTD. AND ANY REPRODUCTION OF THIS DRAWING IN WHOLE OR PART WITHOUT THEIR WRITTEN AUTHORITY IS FORBIDDEN © 1994

ISS.	REVISION/DATE	SIG.
2	SEE DIF430 9.11.94	
1	FIRST DIF 391 10.1.94	

DRAWN RDC/AUD42

CHECKED/APP.D.

SCALE N/A

P.C.B.No 62-026-020 62-026-029

TITLE

MIXER & ROUTING POST ATTENUATOR VERSION

Audio Developments Ltd.
Hall Lane, Walsall Wood, Walsall.
West Midlands, WS9 9AU. England
Tel. Brownhills (0543) 375351

PT.No. 88-026-020 88-026-029

DRG.No. AD. 261 SHT. 1 OF 4 .D. 102

DRG. No. AD. 261 .D. 302 SHT. 1 OF 8

PROJECTION

DO NOT SCALE

DRG. No. AD. 261 .D. 302 SHT. 1 OF 8

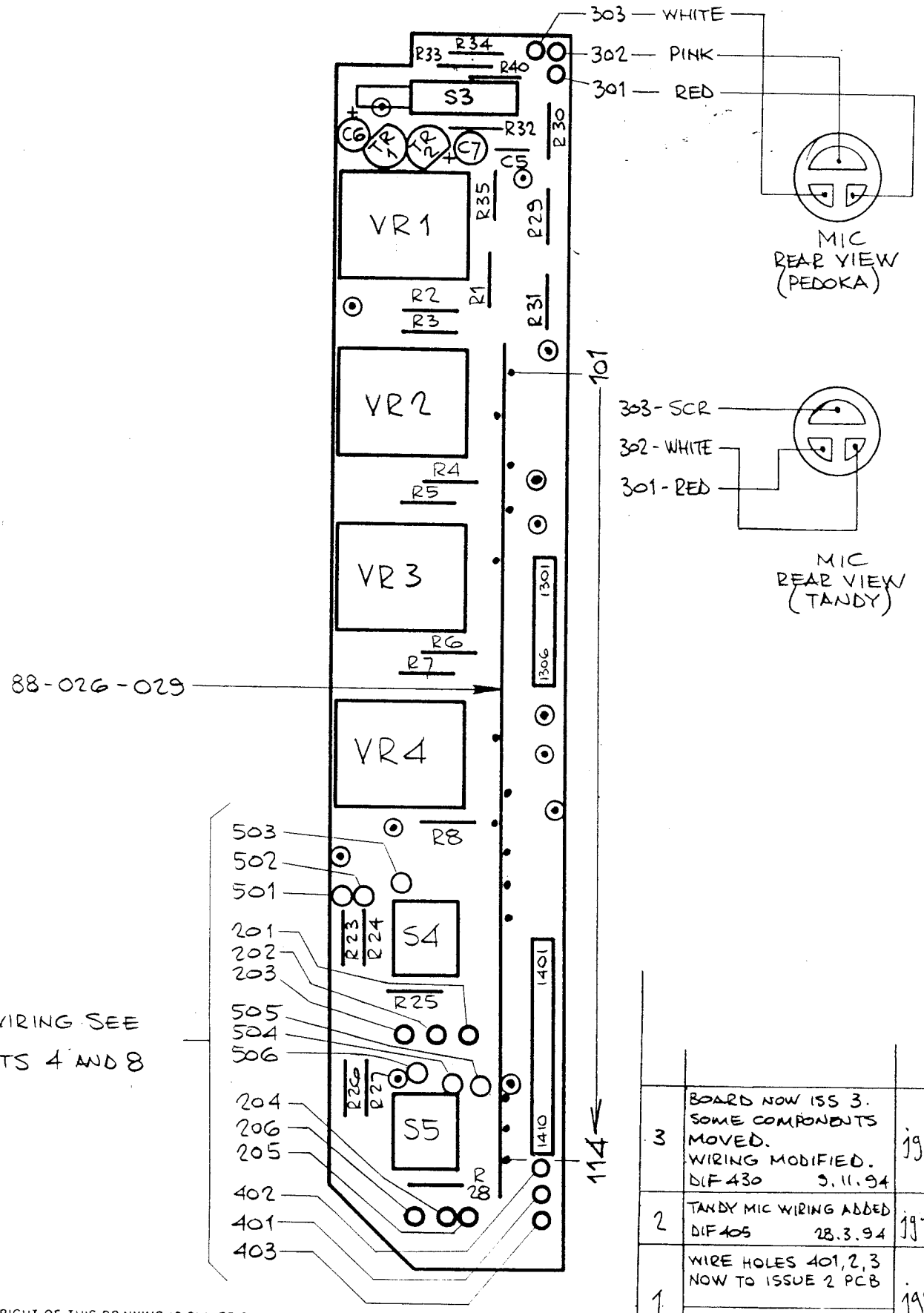

FOR WIRING SEE SHEETS 4 AND 8

ISS.	REVISION/DATE	SIG.
3	BOARD NOW ISS 3. SOME COMPONENTS MOVED. WIRING MODIFIED. DIF 430 3.11.94	jgm
2	TANDY MIC WIRING ADDED DIF 405 28.3.94	jgm
1	WIRE HOLES 401,2,3 NOW TO ISSUE 2 PCB	jgm
	DIF 391 10.1.94	

THE COPYRIGHT OF THIS DRAWING IS OWNED BY AUDIO DEVELOPMENTS LTD AND ANY REPRODUCTION OF THIS DRAWING IN WHOLE OR PART WITHOUT THEIR WRITTEN AUTHORITY IS FORBIDDEN © 1993

DRAWN jgm

CHECKED/APP'D. K

SCALE 150%

P.C.B. No. 62-026-020

TITLE: ROUTING BOARD

Audio Developments Ltd.
Hall Lane, Walsall Wood, Walsall.
West Midlands, WS9 9AU. England
Tel. Brownhills (0543) 375351

PART No. 88-026-020

DRG. No. AD. 261 .D. 302 SHT. 1 OF 8

REF.	VALUE	DESCRIPTION	PART No.
RESISTORS			
R1	3K3	Metal Film 1/8W 1%	70-031-084
R2	3K3	Metal Film 1/8W 1%	70-031-084
R3	3K3	Metal Film 1/8W 1%	70-031-084
R4	3K3	Metal Film 1/8W 1%	70-031-084
R5	3K3	Metal Film 1/8W 1%	70-031-084
R6	3K3	Metal Film 1/8W 1%	70-031-084
R7	3K3	Metal Film 1/8W 1%	70-031-084
R8	2k7	Metal Film 1/8W 1%	70-031-084
R23	24K	Metal Film 1/8W 1%	70-031-105
R24	24K	Metal Film 1/8W 1%	70-031-105
R25	150R	Metal Film 1/8W 1%	70-031-052
R26	24K	Metal Film 1/8W 1%	70-031-105
R27	24K	Metal Film 1/8W 1%	70-031-105
R28	150R	Metal Film 1/8W 1%	70-031-052
R29	4K7	Metal Film 1/8W 1%	70-031-088
R30	4K7	Metal Film 1/8W 1%	70-031-088
R31	470R	Metal Film 1/8W 1%	70-031-064
R32	47K	Metal Film 1/8W 1%	70-031-112
R33	22K	Metal Film 1/8W 1%	70-031-104
R34	4K7	Metal Film 1/8W 1%	70-031-088
R35	1M	Metal Film 1/8W 1%	70-031-144
R40	100K	Metal Film 1/8W 1%	70-031-120
CAPACITORS			
C5	22nF 50V	Ceramic Disc P2.5	18-001-251
C6	1uF 50V	Electrolytic Radial	18-015-507
C7	0.47uF 50V	Electrolytic Radial	18-015-505
TRANSISTORS			
TR1	BF256A	JFET N	72-025-005
TR2	BC549C	NPN TO-92	72-021-001
VARIABLE RESISTORS			
VR1	10K/10K LIN	P11QZAP L1+3 DET	54-327-614/03
VR2	10K/10K LIN	P11QZAP L1+3 DET	54-327-614/03
VR3	10K/10K LIN	P11QZAP L1+3 DET	54-327-614/03
VR4	10K/10K LIN	P11QZAP L1+3 DET	54-327-614/03
SWITCHES			
S3	ON (MOM)	TINY TOGGLE	81-157-802
S4	ON-NONE-ON	TINY TOGGLE T201	81-217-802
S5	ON-NONE-ON	TINY TOGGLE T201	81-217-802
MICROPHONE			
MIC1		ECM66A &270092	44-001-001
PRINTED CIRCUIT BOARD			
	AD261	ROUTING BOARD	62-026-020

THE COPYRIGHT OF THIS DRAWING IS OWNED BY AUDIO DEVELOPMENTS LTD. AND ANY REPRODUCTION OF THIS DRAWING IN WHOLE OR PART WITHOUT THEIR WRITTEN AUTHORITY IS FORBIDDEN © 1994 - 96

ISS.	REVISION/DATE	SIG.
3	SEE DIF 725 20.5.96	
2	SEE DIF.434 17.5.94	
1	FIRST DIF 391 10.1.94	

4 ISS

DRAWN RDC/AUD31
CHECKED/APP.D. jgm
SCALE N/A
P.C.B.No. N/A

TITLE
STEREO ENG MIXER
MIXER & ROUTING

Audio Developments Ltd.
Hall Lane, Walsall Wood, Walsall.
West Midlands, WS9 9AU. England
Tel. Brownhills (0543) 375351

PT.No. 88-026-020

DRG.No. AD. 261 SHT. 3 OF 7 .D. 302

DRG.No. AD. 261 SHT. 3 OF 7 .D. 302

DRG. No. AD. 261 .D. 302 SHT. 5 OF 7

PROJECTION

DO NOT SCALE

DRG. No. AD. 261 .D. 302 SHT. 5 OF 7

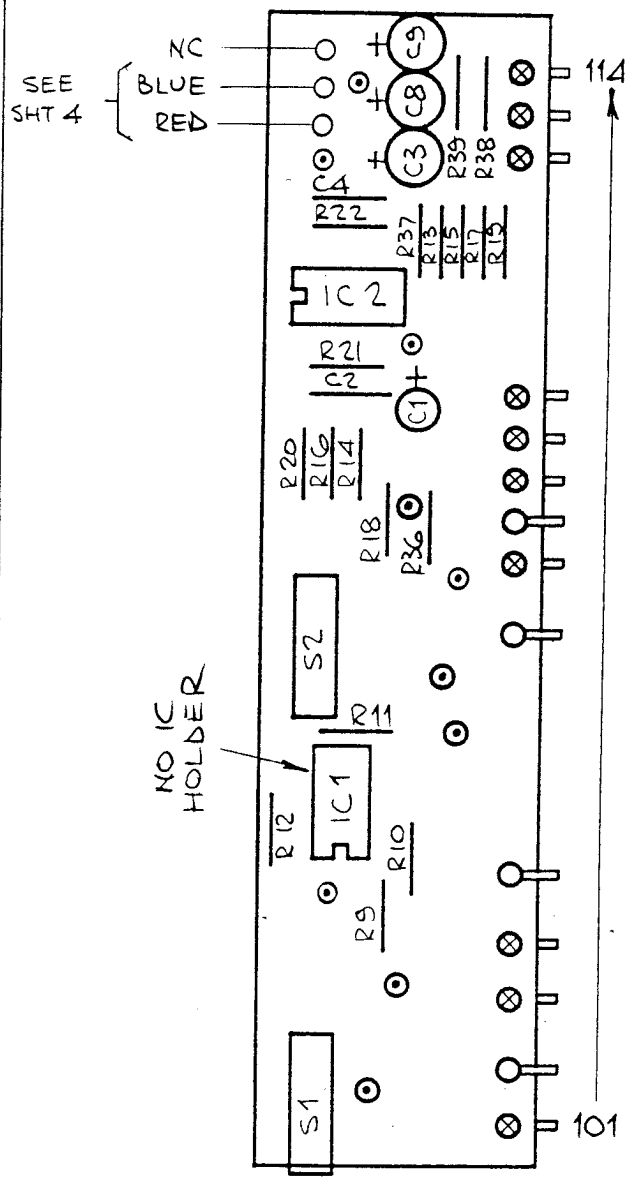

THE COPYRIGHT OF THIS DRAWING IS OWNED BY AUDIO DEVELOPMENTS LTD AND ANY REPRODUCTION OF THIS DRAWING IN WHOLE OR PART WITHOUT THEIR WRITTEN AUTHORITY IS FORBIDDEN © 19 93

ISS.	REVISION/DATE	SIG.
2	NC WAS WHITE WIRE DIF449 23.6.94	jgm
1	FIRST DIF 391 10.1.94	jgm

DRAWN	jgm
CHECKED/APP'D.	
SCALE	150%
P.C.B. No.	62-026-029

TITLE: MIXER BOARD

Audio Developments Ltd.
Hall Lane, Walsall Wood, Walsall.
West Midlands, WS9 9AU. England
Tel. Brownhills (0543) 375351

PART No. 88-026-029

DRG. No. AD. 261 .D. 302 SHT. 5 OF 7

REF.	VALUE	DESCRIPTION	PART No.
RESISTORS			
R9	33K	Metal Film 1/8W 1%	70-031-108
R10	33K	Metal Film 1/8W 1%	70-031-108
R11	33K	Metal Film 1/8W 1%	70-031-108
R12	33K	Metal Film 1/8W 1%	70-031-108
R13	22K	Metal Film 1/8W 1%	70-031-104
R14	22K	Metal Film 1/8W 1%	70-031-104
R15	22K	Metal Film 1/8W 1%	70-031-104
R16	22K	Metal Film 1/8W 1%	70-031-104
R17	22K	Metal Film 1/8W 1%	70-031-104
R18	22K	Metal Film 1/8W 1%	70-031-104
R19	22K	Metal Film 1/8W 1%	70-031-104
R20	22K	Metal Film 1/8W 1%	70-031-104
R21	47K	Metal Film 1/8W 1%	70-031-088
R22	47K	Metal Film 1/8W 1%	70-031-088
R36	22K	Metal Film 1/8W 1%	70-031-104
R37	22K	Metal Film 1/8W 1%	70-031-104
R38	100K	Metal Film 1/8W 1%	70-031-120
R39	100K	Metal Film 1/8W 1%	70-031-120
CAPACITORS			
C1	4.7uF 35V	Electolytic Radial	18-015-411
C2	33pF 50V	Ceramic	18-001-219
C3	4.7uF 35V	Electolytic Radial	18-015-411
C4	33pF 50V	Ceramic	18-001-219
C8	22u 16V	Electolytic Radial	18-015-215
C9	22u 16V	Electolytic Radial	18-015-215
INTEGRATED CIRCUITS			
IC1	TL062CP	DUAL OP.AMP	74-120-002
IC2	NE5532P	DUAL OP.AMP TEXAS	74-120-013
SWITCHES			
S1	ON-NONE-ON	Miniature Toggle 7101	81-112-301
S2	ON-NONE-ON	Miniature Toggle 7101	81-112-301
MICROPHONE			
MIC1		ECM66A & 270092	44-001-001
PRINTED CIRCUIT BOARD			
	AD261	MIXER BOARD	62-026-029

DRG.No. AD. 261 SHT. 7 OF 7 .D. 302

THE COPYRIGHT OF THIS DRAWING IS OWNED BY AUDIO DEVELOPMENTS LTD. AND ANY REPRODUCTION OF THIS DRAWING IN WHOLE OR PART WITHOUT THEIR WRITTEN AUTHORITY IS FORBIDDEN © 1995

DRAWN	RDC/AUD32	TITLE	STEREO ENG MIXER MIXER & ROUTING
CHECKED/APP.D	APM		
SCALE	N/A		
P.C.B.No.	N/A		

Audio Developments Ltd.
Hall Lane, Walsall Wood, Walsall.
West Midlands, WS9 9AU. England
Tel. Brownhills (0543) 375351

ISS.	REVISION/DATE	SIG.
3	SEE DIF 547 24.7.95	jgm
2	SEE DIF 516 24.2.95	jgm
1	FIRST DIF 391 10.1.94	jgm

PT.No. 88-026-029

DRG.No. AD. 261 SHT. 7 OF 7 .D. 302

DRG.No. AD. 261 SHT. 1 OF 2 .D. 104

DRG.No. AD. 261 SHT. 1 OF 2 .D. 104

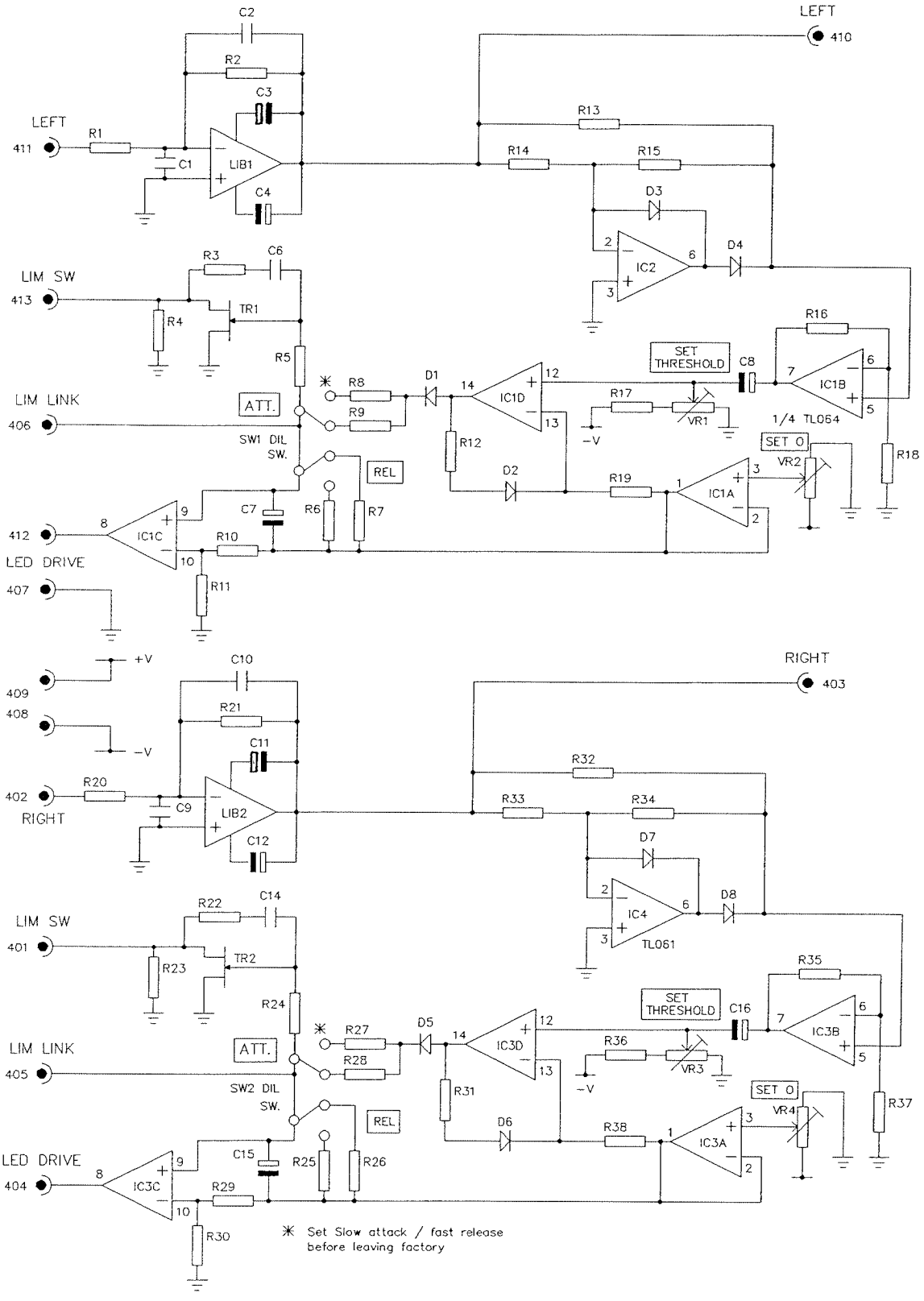

THE COPYRIGHT OF THIS DRAWING IS OWNED BY AUDIO DEVELOPMENTS LTD. AND ANY REPRODUCTION OF THIS DRAWING IN WHOLE OR PART WITHOUT THEIR WRITTEN AUTHORITY IS FORBIDDEN © 1994

DRAWN	RDC/AUD8
CHECKED/APP.D.	MK
SCALE	N/A
P.C.B.No.	62-026-028

TITLE

AD 261 ENG. MIXER

OUTPUT AMP. CCT. DIAGRAM

Audio Developments Ltd.
Hall Lane, Walsall Wood, Walsall.
West Midlands, WS9 9AU. England
Tel. Brownhills (0543) 375351

ISS	REVISION/DATE	SIG.
1	First DUE 3SI 10.1.94	jgm

ISS NO 2

PT.No. 88-026-028

DRG.No. AD. 261 SHT. 1 OF 2 .D. 104

DRG. No. AD.261 .D.304 SHT. 1 OF 4

PROJECTION

DO NOT SCALE

DRG. No. AD.261 .D.304 SHT. 1 OF 4

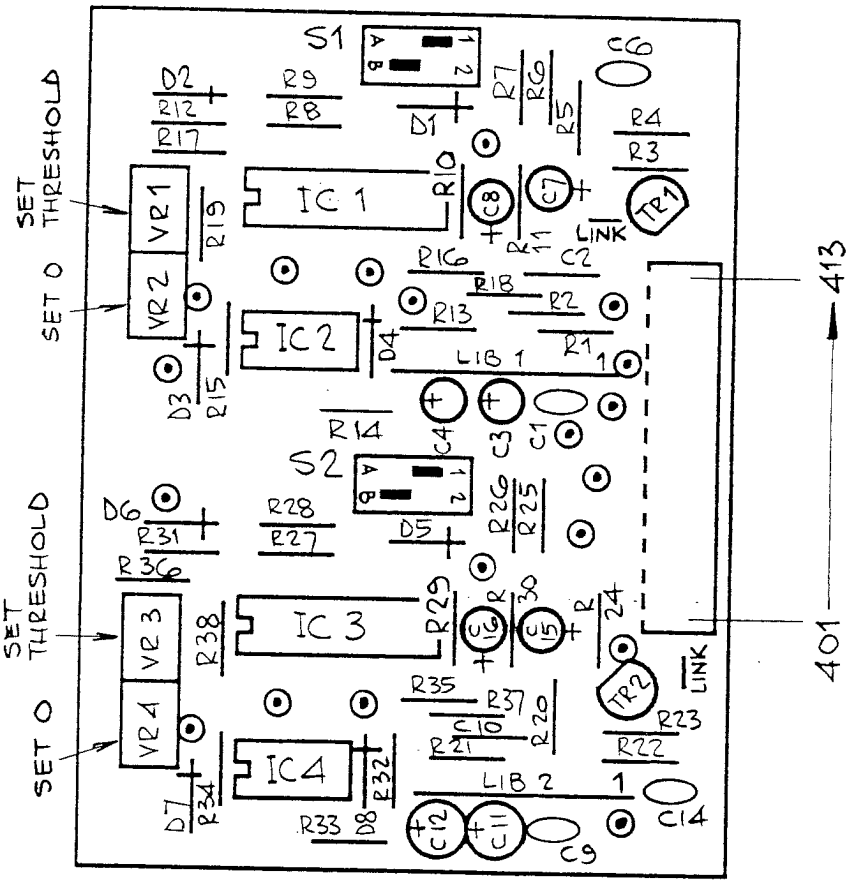

S1 & S2 SET SLOW ATTACK AND FAST RELEASE AT FACTORY.

ATTACK - SW B/RED - 2 = FAST, B = SLOW

RELEASE - SW A/BROWN - 1 = FAST, A = SLOW

THE COPYRIGHT OF THIS DRAWING IS OWNED BY AUDIO DEVELOPMENTS LTD AND ANY REPRODUCTION OF THIS DRAWING IN WHOLE OR PART WITHOUT THEIR WRITTEN AUTHORITY IS FORBIDDEN © 1993

ISS.	REVISION/DATE	SIG.
1	FIRST DIF 391 10.1.94	jgm

DRAWN jgm

CHECKED/APP'D. R

SCALE 150%

P.C.B. No. 62-026-028

TITLE: OUTPUT & LIMITER BOARD

Audio Developments Ltd.
Hall Lane, Walsall Wood, Walsall.
West Midlands, WS9 9AU. England
Tel. Brownhills (0543) 375351

PART No. 88-026-028

DRG. No. AD.261 .D.304 SHT. 1 OF 4

MY (1) 319076 R

DRG.No. AD. 261 SHT. 3 OF 4 .C. 304

REF.	VALUE	DESCRIPTION	PART No.
RESISTORS			
R1	1K8	Metal Film 1/8W 1%	70-031-078
R2	150K	Metal Film 1/8W 1%	70-031-124
R3	100K	Metal Film 1/8W 1%	70-031-120
R4	1M	Metal Film 1/8W 1%	70-031-144
R5	100K	Metal Film 1/8W 1%	70-031-120
R6	470K	Metal Film 1/8W 1%	70-031-136
R7	75K	Metal Film 1/8W 1%	70-031-117
R8	10K	Metal Film 1/8W 1%	70-031-096
R9	47K	Metal Film 1/8W 1%	70-031-112
R10	47K	Metal Film 1/8W 1%	70-031-112
R11	1M	Metal Film 1/8W 1%	70-031-144
R12	100K	Metal Film 1/8W 1%	70-031-120
R13	10K	Metal Film 1/8W 1%	70-031-096
R14	20K	Metal Film 1/8W 1%	70-031-103
R15	10K	Metal Film 1/8W 1%	70-031-096
R16	100K	Metal Film 1/8W 1%	70-031-120
R17	120K	Metal Film 1/8W 1%	70-031-122
R18	100K	Metal Film 1/8W 1%	70-031-120
R19	10K	Metal Film 1/8W 1%	70-031-096
R20	1K8	Metal Film 1/8W 1%	70-031-078
R21	150K	Metal Film 1/8W 1%	70-031-124
R22	100K	Metal Film 1/8W 1%	70-031-120
R23	1M	Metal Film 1/8W 1%	70-031-144
R24	100K	Metal Film 1/8W 1%	70-031-120
R25	470K	Metal Film 1/8W 1%	70-031-136
R26	75K	Metal Film 1/8W 1%	70-031-117
R27	10K	Metal Film 1/8W 1%	70-031-096
R28	47K	Metal Film 1/8W 1%	70-031-112
R29	47K	Metal Film 1/8W 1%	70-031-112
R30	1M	Metal Film 1/8W 1%	70-031-144
R31	100K	Metal Film 1/8W 1%	70-031-120
R32	10K	Metal Film 1/8W 1%	70-031-096
R33	20K	Metal Film 1/8W 1%	70-031-103
R34	10K	Metal Film 1/8W 1%	70-031-096
R35	100K	Metal Film 1/8W 1%	70-031-120
R36	120K	Metal Film 1/8W 1%	70-031-122
R37	100K	Metal Film 1/8W 1%	70-031-120
R38	10K	Metal Film 1/8W 1%	70-031-096
CAPACITORS			
C1	2.2pF 50V	Ceramic Disc	18-001-205
C2	4.7pF 63V	Ceramic Disc	18-001-309
C3	10uF 16V	Electrolytic Radial	18-015-213
C4	10uF 16V	Electrolytic Radial	18-015-213
C5		Spare	
C6	2.2nF 50V	Ceramic Disc	18-001-241
C7	1uF 16V	Electrolytic Radial	18-015-507
C8	1uF 16V	Electrolytic Radial	18-015-507
C9	2.2pF 50V	Ceramic Disc	18-001-205
C10	4.7pF 63V	Ceramic Disc	18-001-309
C11	10uF 16V	Electrolytic Radial	18-015-213
C12	10uF 16V	Electrolytic Radial	18-015-213
C13		Spare	
C14	2.2nF 50V	Ceramic Disc	18-001-241
C15	1uF 16V	Electrolytic Radial	18-015-507
C16	1uF 16V	Electrolytic Radial	18-015-507

THE COPYRIGHT OF THIS DRAWING IS OWNED BY AUDIO DEVELOPMENTS LTD. AND ANY REPRODUCTION OF THIS DRAWING IN WHOLE OR PART WITHOUT THEIR WRITTEN AUTHORITY IS FORBIDDEN © 1994

ISS.	REVISION/DATE	SIG.
2	SEE DIF 802 8.5.97	
1	FIRST DIF 391 10.1.94	

DRAWN RDC/AUD23

CHECKED/APP.D. MK

SCALE N/A

P.C.B.No. N/A

TITLE

STEREO ENG MIXER

OUTPUT AMP

Audio Developments Ltd.
Hall Lane, Walsall Wood, Walsall.
West Midlands, WS9 9AU. England
Tel. Brownhills (0543) 375351

PT.No. 88-026-028

DRG.No. AD. 261 SHT. 3 OF 4 .C. 304

SHT. 4 OF 4 .D. 304 DRG.No. AD. 261

REF.	VALUE	DESCRIPTION	PART No.
DIODES			
D1	IN4148	HI/S.DO35	72-010-001
D2	IN4148	HI/S.DO35	72-010-001
D3	OA90	GERMANIUM	72-010-003
D4	OA90	GERMANIUM	72-010-003
D5	IN4148	HI/S.DO35	72-010-001
D6	IN4148	HI/S.DO35	72-010-001
D7	OA90	GERMANIUM	72-010-003
D8	OA90	GERMANIUM	72-010-003
VARIABLE RESISTORS			
VR1	100K	TRIM CERMET 1/4"	32-052-052
VR2	100K	TRIM CERMET 1/4"	32-052-052
VR3	100K	TRIM CERMET 1/4"	32-052-052
VR4	100K	TRIM CERMET 1/4"	32-052-052
TRANSISTORS			
TR1	BF256A	FET	72-025-005
TR2	BF256A	FET	72-025-005
INTEGRATED CIRCUITS			
IC1	TL064CN	QUAD OP.AMP	74-130-001
IC2	TL061CP	OP.AMP	74-120-001
IC3	TL064CN	QUAD OP.AMP	74-130-001
IC4	TL061CP	OP.AMP	74-120-001
LIB1	A580 LIB	AUD/HYBRID	74-920-000
LIB2	A580 LIB	AUD/HYBRID	74-920-000
SWITCHES			
SW1	2W.SPDT	DILSW SCS2023	82-730-001
SW2	2W.SPDT	DILSW SCS2023	82-730-001
PRINTED CIRCUIT BOARD			
	AD261	OUTPUT & LIMITER BOARD	62-026-028

THE COPYRIGHT OF THIS DRAWING IS OWNED BY AUDIO DEVELOPMENTS LTD. AND ANY REPRODUCTION OF THIS DRAWING IN WHOLE OR PART WITHOUT THEIR WRITTEN AUTHORITY IS FORBIDDEN © 1994

ISS.	REVISION/DATE	SIG.
2		ISS
1	FIRST DIF 391 10.1.94	jgm

DRAWN RDC/AUD24
CHECKED/APP.D. MK
SCALE N/A
P.C.B.No. N/A

TITLE
STEREO ENG MIXER
OUTPUT AMP

Audio Developments Ltd.
Hall Lane, Walsall Wood, Walsall.
West Midlands, WS9 9AU. England
Tel. Brownhills (0543) 375351

PT.No. 88-026-028

DRG.No. AD. 261 SHT. 4 OF 4 .D. 304

DRG.No. AD. 261 SHT. 1 OF 2 .C. 111

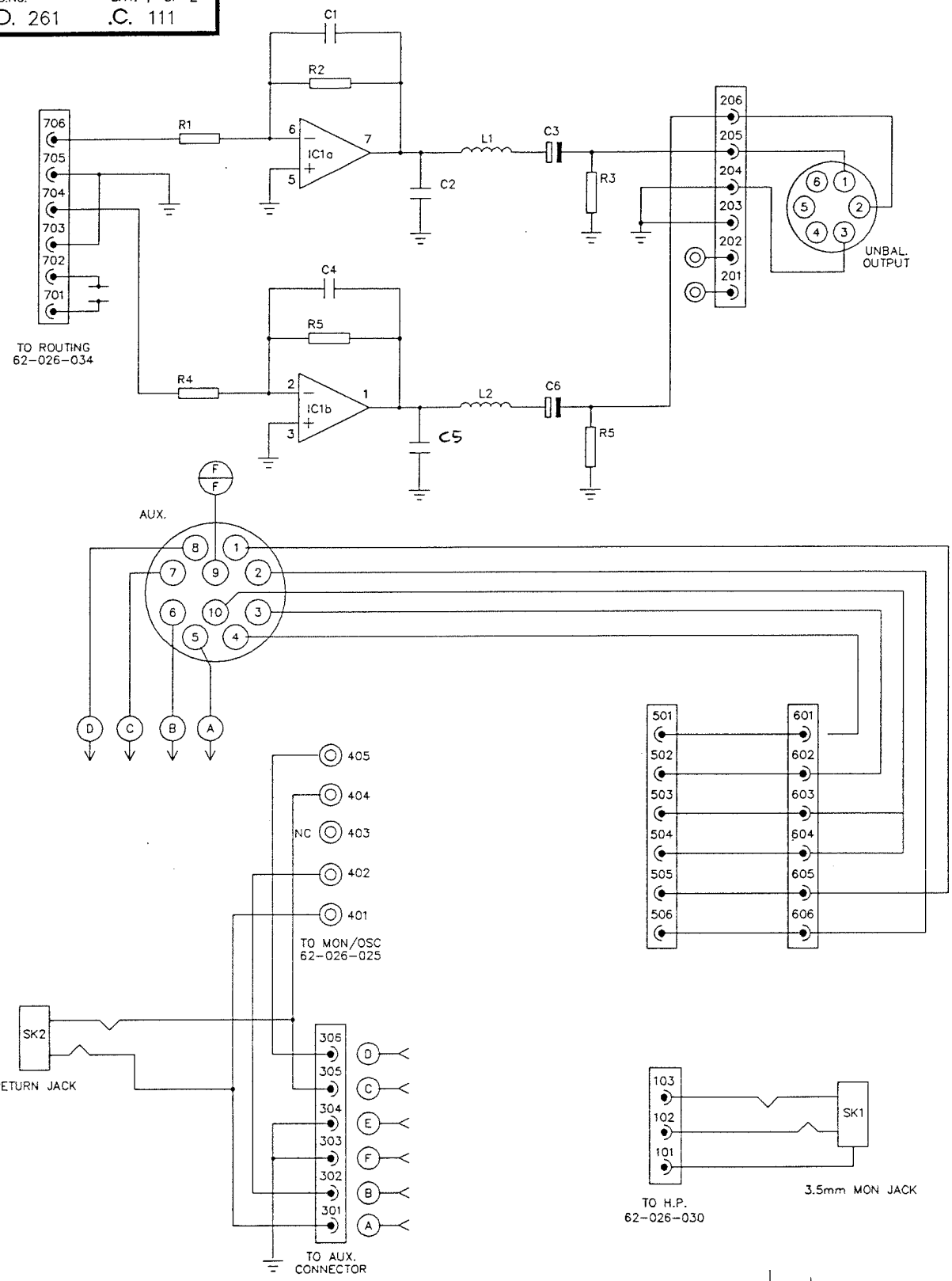

ISS.	REVISION/DATE	SIG.
3	SEE DIF 629 25.1.96	jgm
2	O/P XLRS DELETED DIF 430 9.11.94	jgm
1	FIRST DIF 391 10.1.94	jgm

THE COPYRIGHT OF THIS DRAWING IS OWNED BY AUDIO DEVELOPMENTS LTD. AND ANY REPRODUCTION OF THIS DRAWING IN WHOLE OR PART WITHOUT THEIR WRITTEN AUTHORITY IS FORBIDDEN © 1994

DRAWN RDC/AUD13
CHECKED/APP.D. MK
SCALE N/A
P.C.B.No. 62-026-034

TITLE: UNBALANCED OUTPUT

Audio Developments Ltd.
Hall Lane, Walsall Wood, Walsall.
West Midlands, WS9 9AU. England
Tel. Brownhills (0543) 375351

PT.No. 88-026-034

DRG.No. AD. 261 SHT. 1 OF 2 .C. 111

DRG.No. AD. 261 SHT. 1 OF 2 .C. 111

DRG.No. AD. 261 SHT. 3 OF 4 .C. 311

REF.	VALUE	DESCRIPTION	PART No.
RESISTORS			
R1	47K	Metal Film 1/8W 1%	70-031-112
R2	100K	Metal Film 1/8W 1%	70-031-120
R3	100K	Metal Film 1/8W 1%	70-031-120
R4	47K	Metal Film 1/8W 1%	70-031-112
R5	100K	Metal Film 1/8W 1%	70-031-120
R6	100K	Metal Film 1/8W 1%	70-031-120
CAPACITORS			
C1	10pF 50V	Ceramic Disc	18-001-213
C2	1nF 100V	Ceramic Disc	18-001-437
C3	100uF 25V	Electrolytic Radial	18-013-316
C4	10pF 50V	Ceramic Disc	18-001-213
C5	1nF 100V	Ceramic Disc	18-001-437
C6	100uF 25V	Electrolytic Radial	18-013-316
INTEGRATED CIRCUITS			
IC1	TL062CP	Dual OP.AMP	74-120-002
INDUCTORS			
L1	220uH	Choke (SC10) A/L	22-505-102
L2	220uH	Choke (SC10) A/L	22-505-102
CONNECTOR			
		3.5mm Jack Socket	25-011-130
PRINTED CIRCUIT BOARD			
	AD261	UNBALANCED OUTPUT BOARD	62-026-034

DRG.No. AD. 261 SHT. 3 OF 4 .C. 311

THE COPYRIGHT OF THIS DRAWING IS OWNED BY AUDIO DEVELOPMENTS LTD. AND ANY REPRODUCTION OF THIS DRAWING IN WHOLE OR PART WITHOUT THEIR WRITTEN AUTHORITY IS FORBIDDEN © 1994

ISS.	REVISION/DATE	SIG.
2	SEE DIF 649 25.1.96	jgm
1	FIRST DIF 391 10.1.94	jgm

DRAWN RDC/AUD34
CHECKED/APP.D. MK
SCALE N/A
P.C.B.No. N/A

TITLE
STEREO ENG MIXER
UNBALANCED OUTPUT

Audio Developments Ltd.
Hall Lane, Walsall Wood, Walsall.
West Midlands, WS9 9AU. England
Tel. Brownhills (0543) 375351

PT.No. 88-026-034

DRG.No. AD. 261 SHT. 3 OF 4 .C. 311

DRG. No. AD. 261.D. 311 SHT. 1 OF 4

PROJECTION

DO NOT SCALE

DRG. No. AD. 261.D. 311 SHT. 1 OF 4

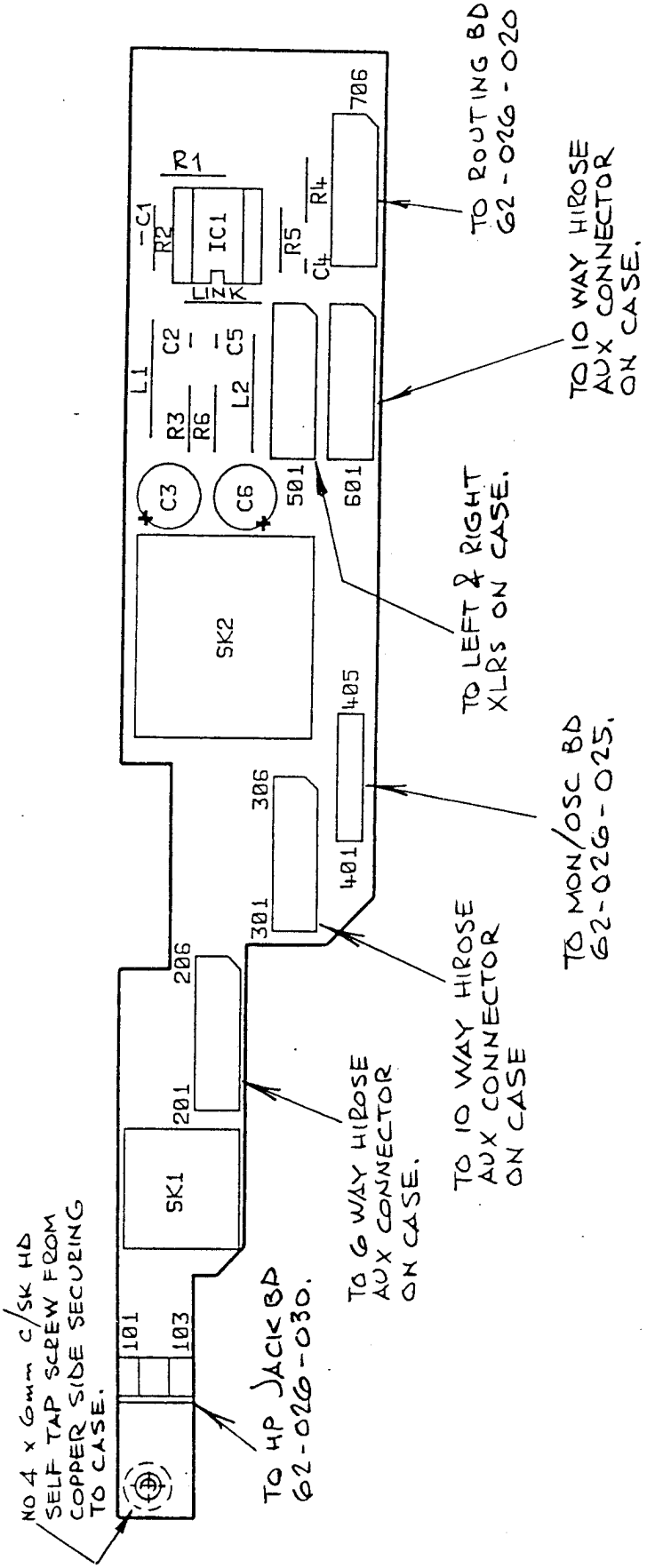

THE COPYRIGHT OF THIS DRAWING IS OWNED BY AUDIO DEVELOPMENTS LTD AND ANY REPRODUCTION OF THIS DRAWING IN WHOLE OR PART WITHOUT THEIR WRITTEN AUTHORITY IS FORBIDDEN © 1993

ISS.	REVISION/DATE	SIG.
1	REDESIGNED (30.4.93)	jgm
	DIF 391 10.1.94	

DRAWN jgm

CHECKED/APP'D. LUK

SCALE 150%

P.C.B. No. 62-026-034

TITLE: UNBAL O/P BOARD

Audio Developments Ltd.
Hall Lane, Walsall Wood, Walsall.
West Midlands, WS9 9AU. England
Tel. Brownhills (0543) 375351

PART No. 88-026-034

DRG. No. AD. 261 .D. 311 SHT. 1 OF 4

MY (1) 319076 R

DRG.No. AD. 261 SHT. 1 OF 4 .C. 103

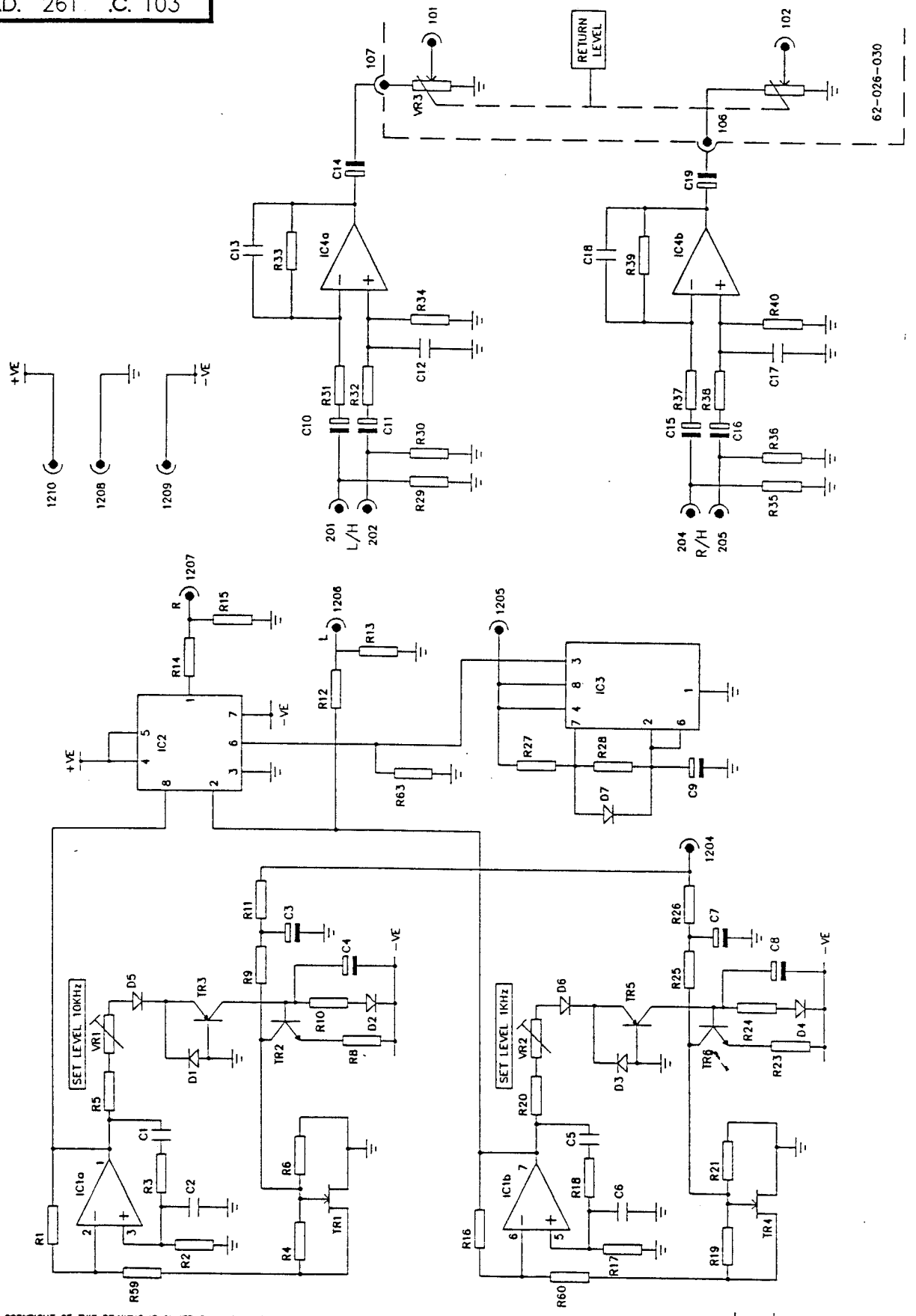

THE COPYRIGHT OF THIS DRAWING IS OWNED BY AUDIO DEVELOPMENTS LTD. AND ANY REPRODUCTION OF THIS DRAWING IN WHOLE OR PART WITHOUT THEIR WRITTEN AUTHORITY IS FORBIDDEN © 1994

DRAWN	RDC/AUDS	
CHECKED/APP.D.	MK	
SCALE	N/A	
P.C.B.No.	62-026-025 62-026-030	

TITLE

MONITOR
PART 1

Audio Developments Ltd.
Hall Lane, Walsall Wood, Walsall.
West Midlands, WS9 9AU. England
Tel. Brownhills (0543) 375351

ISS.	REVISION/DATE	SIG.
1	FIRST DIF 301 10.1.94	jgm

PT.No. 88-026-025

DRG.No. AD. 261 SHT. 1 OF 4 .C. 103

DRG.No. AD. 261 SHT. 1 OF 4 .C. 103

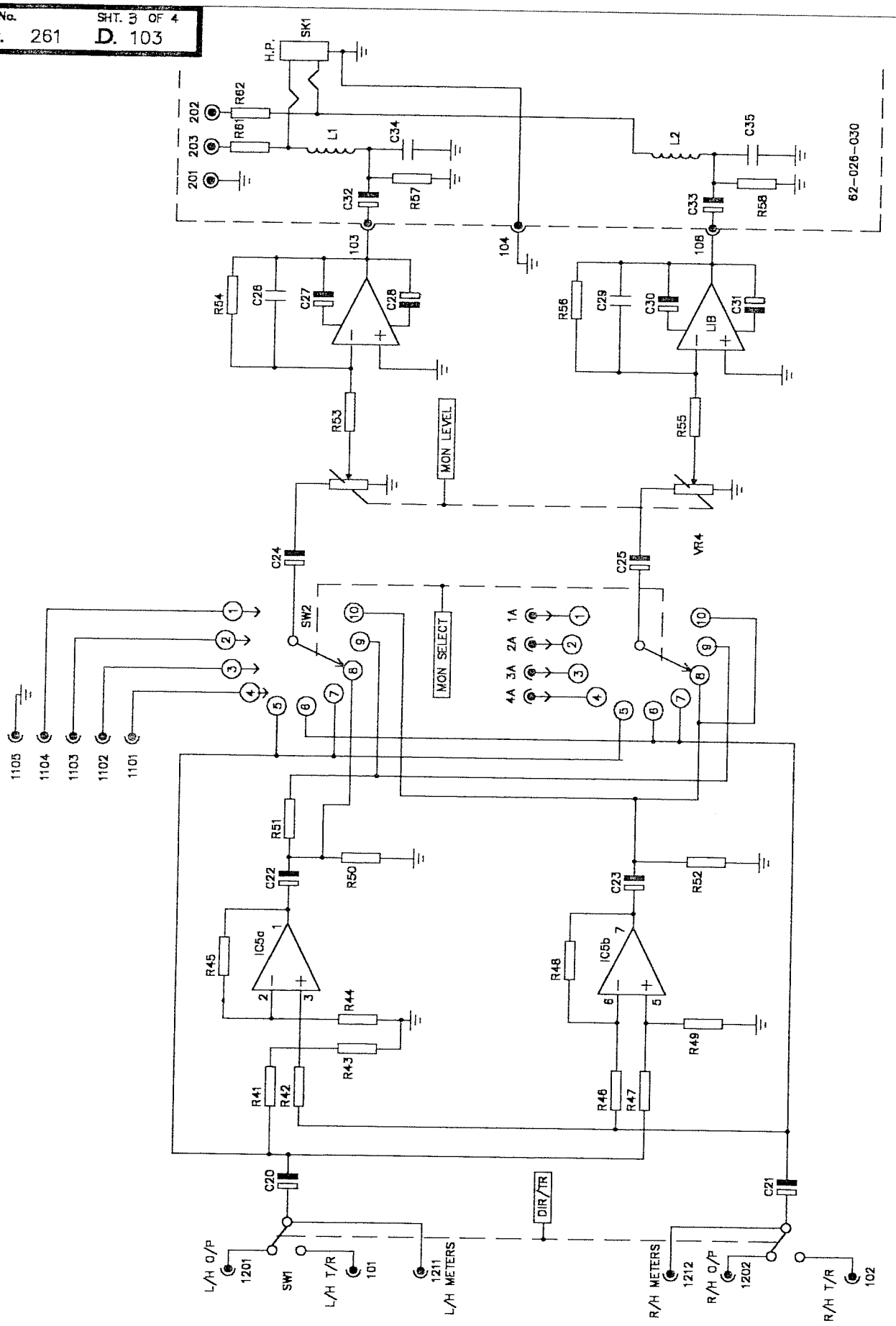

THE COPYRIGHT OF THIS DRAWING IS OWNED BY AUDIO DEVELOPMENTS LTD. AND ANY REPRODUCTION OF THIS DRAWING IN WHOLE OR PART WITHOUT THEIR WRITTEN AUTHORITY IS FORBIDDEN © 1994

ISS.	REVISION/DATE	SIG.
2	SEE DIF 568 11.3.96	
1	FIRST DIF 391 10.1.94	

ISS. No. 3

DRAWN	RDC/AUD6
CHECKED/APP.D.	
SCALE	N/A
P.C.B.No.	82-026-025 82-026-030

TITLE

MONITOR
PART 2

Audio Developments Ltd.
Hall Lane, Walsall Wood, Walsall.
West Midlands, WS9 9AU. England
Tel. Brownhills (0543) 375351

PT.No. 88-026-025

DRG.No. AD. 261 SHT. 3 OF 4 D. 103

DRG.No. AD. 261 SHT. 3 OF 4 D. 103

DRG. No. SHT. 1 OF 8
AD. 261 .D. 303

PROJECTION

DO NOT SCALE

DRG. No. AD. 261 .D. 303 SHT. 1 OF 8

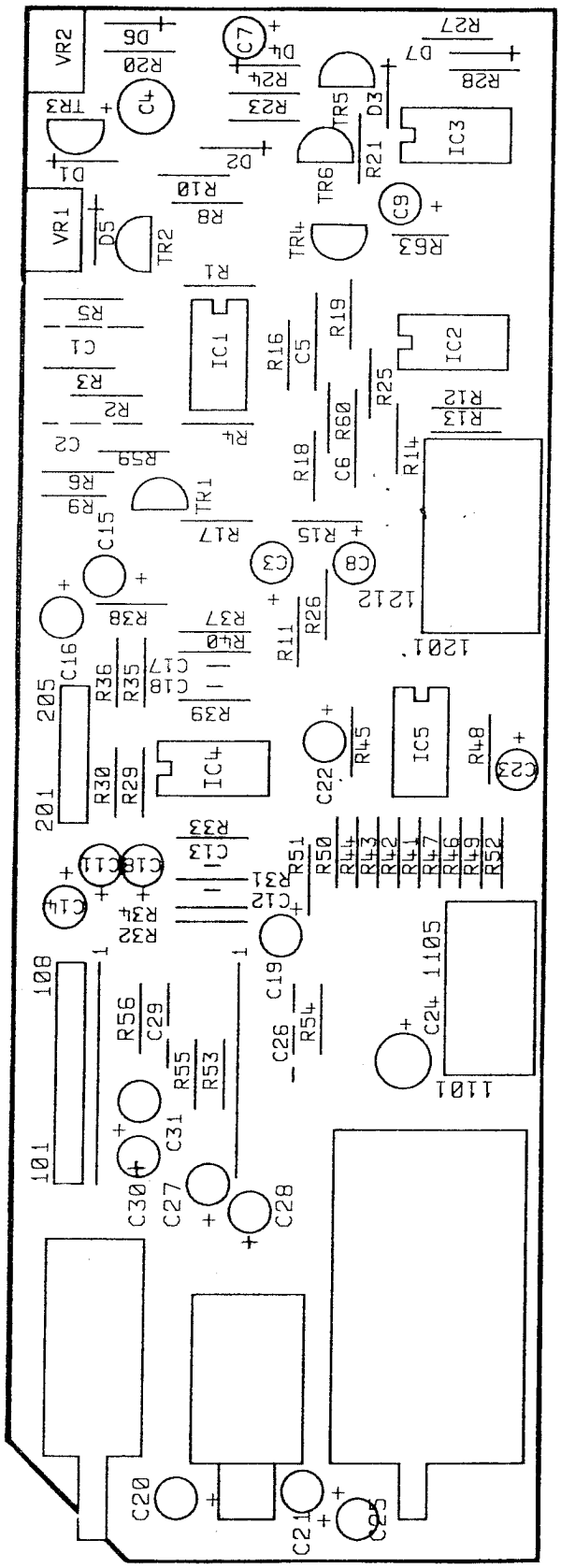

THE COPYRIGHT OF THIS DRAWING IS OWNED BY AUDIO DEVELOPMENTS LTD AND ANY REPRODUCTION OF THIS DRAWING IN WHOLE OR PART WITHOUT THEIR WRITTEN AUTHORITY IS FORBIDDEN © 1998

ISS.	REVISION/DATE	SIG.
2	~~REDRAWN~~ DIF 98/001 14.1.98	jgm

ISS NO 3

DRAWN jgm

CHECKED/APP'D. APH

SCALE N/A

P.C.B. No. 62-026-025

TITLE: MONITOR BOARD

Audio Developments Ltd.
Hall Lane, Walsall Wood, Walsall.
West Midlands, WS9 9AU. England
Tel. Brownhills (0543) 375351

PART No. 88-026-025

DRG. No. AD. 261 .D. 303 SHT. 1 OF 8

REF.	VALUE	DESCRIPTION	PART No.
RESISTORS			
R1	2K4	Metal Film 1/8W 1%	70-031-081
R2	16K	Metal Film 1/8W 1%	70-031-101
R3	16K	Metal Film 1/8W 1%	70-031-101
R4	100K	Metal Film 1/8W 1%	70-031-120
R5	75K	Metal Film 1/8W 1%	70-031-117
R6	100K	Metal Film 1/8W 1%	70-031-120
R7		Spare	
R8	10K	Metal Film 1/8W 1%	70-031-096
R9	220K	Metal Film 1/8W 1%	70-031-128
R10	470K	Metal Film 1/8W 1%	70-031-136
R11	22K	Metal Film 1/8W 1%	70-031-104
R12	2K7	Metal Film 1/8W 1%	70-031-082
R13	1K	Metal Film 1/8W 1%	70-031-072
R14	2K7	Metal Film 1/8W 1%	70-031-082
R15	1K1	Metal Film 1/8W 1%	70-031-073
R16	2K4	Metal Film 1/8W 1%	70-031-081
R17	16K	Metal Film 1/8W 1%	70-031-101
R18	16K	Metal Film 1/8W 1%	70-031-101
R19	100K	Metal Film 1/8W 1%	70-031-120
R20	75K	Metal Film 1/8W 1%	70-031-117
R21	100K	Metal Film 1/8W 1%	70-031-120
R22		Spare	
R23	10K	Metal Film 1/8W 1%	70-031-096
R24	470K	Metal Film 1/8W 1%	70-031-136
R25	220K	Metal Film 1/8W 1%	70-031-128
R26	22K	Metal Film 1/8W 1%	70-031-104
R27	75K	Metal Film 1/8W 1%	70-031-117
R28	75K	Metal Film 1/8W 1%	70-031-117
R29	47K	Metal Film 1/8W 1%	70-031-112
R30	47K	Metal Film 1/8W 1%	70-031-112
R31	47K	Metal Film 1/8W 1%	70-031-112
R32	47K	Metal Film 1/8W 1%	70-031-112
R33	220K	Metal Film 1/8W 1%	70-031-128
R34	220K	Metal Film 1/8W 1%	70-031-128
R35	47K	Metal Film 1/8W 1%	70-031-112
R36	47K	Metal Film 1/8W 1%	70-031-112
R37	47K	Metal Film 1/8W 1%	70-031-112
R38	47K	Metal Film 1/8W 1%	70-031-112
R39	47K	Metal Film 1/8W 1%	70-031-112
R40	47K	Metal Film 1/8W 1%	70-031-112
R41	100K	Metal Film 1/8W 1%	70-031-120
R42	100K	Metal Film 1/8W 1%	70-031-120
R43	1M	Metal Film 1/8W 1%	70-031-144
R44	100K	Metal Film 1/8W 1%	70-031-120
R45	110K	Metal Film 1/8W 1%	70-031-121
R46	100K	Metal Film 1/8W 1%	70-031-120
R47	100K	Metal Film 1/8W 1%	70-031-120
R48	110K	Metal Film 1/8W 1%	70-031-121
R49	100K	Metal Film 1/8W 1%	70-031-120
R50	100K	Metal Film 1/8W 1%	70-031-120
R51	2K	Metal Film 1/8W 1%	70-031-079
R52	100K	Metal Film 1/8W 1%	70-031-120
R53	10K	Metal Film 1/8W 1%	70-031-096
R54	30K	Metal Film 1/8W 1%	70-031-107
R55	10K	Metal Film 1/8W 1%	70-031-096
R56	30K	Metal Film 1/8W 1%	70-031-107
R59	750R	Metal Film 1/8W 1%	70-031-069
R60	750R	Metal Film 1/8W 1%	70-031-069
R63	1K	Metal Film 1/8W 1%	70-031-072

THE COPYRIGHT OF THIS DRAWING IS OWNED BY AUDIO DEVELOPMENTS LTD. AND ANY REPRODUCTION OF THIS DRAWING IN WHOLE OR PART WITHOUT THEIR WRITTEN AUTHORITY IS FORBIDDEN © 1996

ISS.	REVISION/DATE	SIG.
4	SEE DIF 913 4.12.97	jgm
3	SEE DIF 787 18.11.95	
2	SEE DIF 751 10.7.96	
1	FIRST DIF 391 10.1.94	

DRAWN RDC/AUD21
CHECKED/APP.D. jgm
SCALE N/A
P.C.B.No. N/A

TITLE
STEREO ENG MIXER MONITOR

Audio Developments Ltd.
Hall Lane, Walsall Wood, Walsall.
West Midlands, WS9 9AU. England
Tel. Brownhills (0543) 375351

PT.No. 88-026-025

DRG.No. AD. 261 SHT. 3 OF 8 D. 303

DRG.No. AD. 261 SHT.3 OF 8 D. 303

SHT. 4 OF 8 .C. 303 DRG.No. AD. 261

REF.	VALUE	DESCRIPTION	PART No.
CAPACITORS			
C1	1000pF 160V	Polystyrene Axial	18-060-334
C2	1000pF 160V	Polystyrene Axial	18-060-334
C3	2.2uF 50V	Electrolytic Radial	18-015-509
C4	0.47uF 50V	Electrolytic Radial	18-015-505
C5	0.01uF 400V	Polyester Radial	18-046-401
C6	0.01uF 400V	Polyester Radial	18-046-401
C7	2.2uF 50V	Electrolytic Radial	18-015-509
C8	0.47uF 50V	Electrolytic Radial	18-015-505
C9	47uF 16V	Electrolytic Radial	18-015-217
C10	1uF 50V	Electrolytic Radial	18-015-507
C11	1uF 50V	Electrolytic Radial	18-015-507
C12	10pF 50V	Ceramic Disc	18-001-213
C13	10pF 50V	Ceramic Disc	18-001-213
C14	22uF 16V	Electrolytic Radial	18-015-215
C15	1uF 50V	Electrolytic Radial	18-015-507
C16	1uF 50V	Electrolytic Radial	18-015-507
C17	10pF 50V	Ceramic Disc	18-001-213
C18	10pF 50V	Ceramic Disc	18-001-213
C19	22uF 16V	Electrolytic Radial	18-015-215
C20	10uF 16V	Electrolytic Radial	18-015-213
C21	10uF 16V	Electrolytic Radial	18-015-213
C22	10uF 16V	Electrolytic Radial	18-015-213
C23	10uF 16V	Electrolytic Radial	18-015-213
C24	10uF 16V	Electrolytic Radial	18-015-213
C25	10uF 16V	Electrolytic Radial	18-015-213
C26	10pF 50V	Ceramic Disc	18-001-213
C27	10uF 16V	Electrolytic Radial	18-015-213
C28	10uF 16V	Electrolytic Radial	18-015-213
C29	10pF 50V	Ceramic Disc	18-001-213
C30	10uF 16V	Electrolytic Radial	18-015-213
C31	10uF 16V	Electrolytic Radial	18-015-213
DIODES			
D1	IN4148	HI/S.D035	72-010-001
D2	IN4148	HI/S.D035	72-010-001
D3	IN4148	HI/S.D035	72-010-001
D4	IN4148	HI/S.D035	72-010-001
D5	IN4148	HI/S.D035	72-010-001
D6	IN4148	HI/S.D035	72-010-001
D7	IN4148	HI/S.D035	72-010-001
VARIABLE RESISTORS			
VR1	500K	Trim Cermet 1/4"	32-050-034
VR2	500K	Trim Cermet 1/4"	32-050-034
VR4	10K/10K LOG	149 (CM47230)	52-219-314
INTEGRATED CIRCUITS			
IC1	TL072CP	Dual OP.AMP	74-120-004
IC2	DG419DJ	SPDT AN.SW	74-020-001
IC3	LM555CN	Cmos Timer	74-120-020
IC4	TL062CP	Dual OP.AMP	74-120-002
IC5	TL062CP	Dual OP.AMP	74-120-002
LIB1	A580	Aud/Hybrid	74-920-000
LIB2	A580	Aud/Hybrid	74-920-000

THE COPYRIGHT OF THIS DRAWING IS OWNED BY AUDIO DEVELOPMENTS LTD. AND ANY REPRODUCTION OF THIS DRAWING IN WHOLE OR PART WITHOUT THEIR WRITTEN AUTHORITY IS FORBIDDEN © 1994

ISS.	REVISION/DATE	SIG.
2	SEE DIF 787 18.11.96	jgm
1	FIRST DIF 391 13.1.94	jgm

DRAWN RDC/AUD22

CHECKED/APP.D. MK

SCALE N/A

P.C.B.No. N/A

TITLE

STEREO ENG MIXER

MONITOR

Audio Developments Ltd.
Hall Lane, Walsall Wood, Walsall.
West Midlands, WS9 9AU. England
Tel. Brownhills (0543) 375351

PT.No. 88-026-025

DRG.No. AD. 261 .C. 303 SHT. 4 OF 8

REF.	VALUE	DESCRIPTION	PART No.
SWITCHES			
SW1	2PCO	F Series Push Switch	82-126-002
SW2	2P 10W	Rotary	82-265-801
TRANSISTORS			
TR1	BF256A	JFET N TO-92	72-025-005
TR2	BC549C	NPN TO-92	72-021-001
TR3	BC559B	PNP TO-92	72-022-001
TR4	BF256A	JFET N TO-92	72-025-005
TR5	BC559B	PNP TO-92	72-022-001
TR6	BC549C	NPN TO-92	72-021-001
PRINTED CIRCUIT BOARD			
	AD261	MONITOR & OSCILLATOR	62-026-025

SHT. 5 OF 8 .D. 303
DRG.No. AD. 261

THE COPYRIGHT OF THIS DRAWING IS OWNED BY AUDIO DEVELOPMENTS LTD. AND ANY REPRODUCTION OF THIS DRAWING IN WHOLE OR PART WITHOUT THEIR WRITTEN AUTHORITY IS FORBIDDEN © 1996

ISS.	REVISION/DATE	SIG.
2	SEE DIF 313 4.12.97	jgm
1	FIRST DIF 391 10.1.94	jam

DRAWN RDC/AUD33
CHECKED/APP.D. jam
SCALE N/A
P.C.B.No. N/A

TITLE
STEREO ENG MIXER
MONITOR

Audio Developments Ltd.
Hall Lane, Walsall Wood, Walsall.
West Midlands, WS9 9AU. England
Tel. Brownhills (0543) 375351

PT.No. 88-026-025

DRG.No. AD. 261 SHT. 5 OF 8 .D. 303

DRG. No. AD. 261.D. 303 SHT. 6 OF 8

PROJECTION

DO NOT SCALE

DRG. No. AD. 261 .D. 303 SHT. 6 OF 8

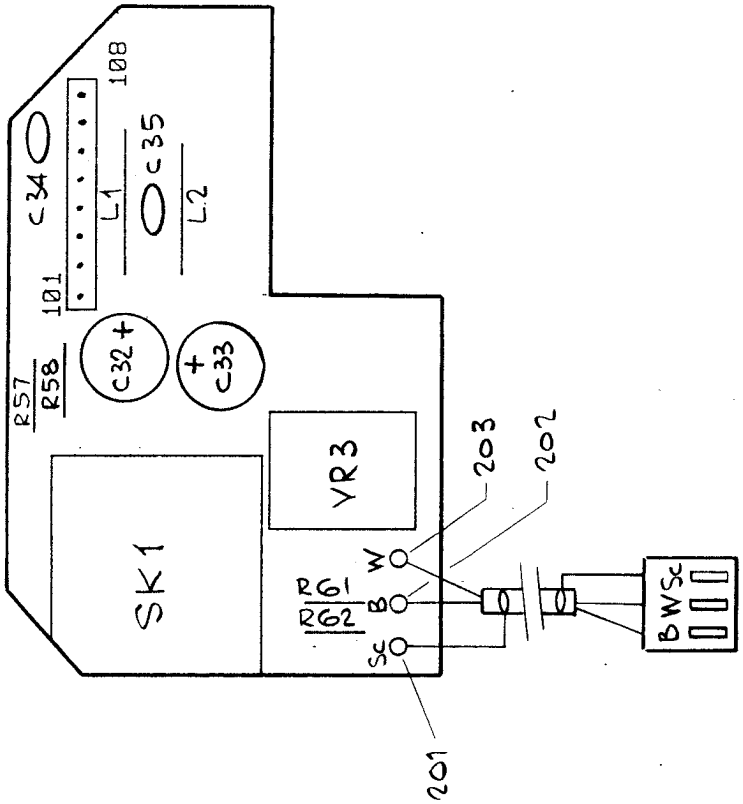

ISS.	REVISION/DATE	SIG.
2	R57 & R58 REPOSITIONED DIF. 434 17.5.94	jgm
1	REDRAWN DIF 391 10.1.94	jgm
	FIRST	

THE COPYRIGHT OF THIS DRAWING IS OWNED BY AUDIO DEVELOPMENTS LTD. AND ANY REPRODUCTION OF THIS DRAWING IN WHOLE OR PART WITHOUT THEIR WRITTEN AUTHORITY IS FORBIDDEN © 1992

DRAWN jgm

CHECKED/APP'D. MK

SCALE 150%

P.C.B. No. 62-026-030

TITLE: MON JACK BOARD

Audio Developments Ltd.
Hall Lane, Walsall Wood, Walsall.
West Midlands, WS9 9AU. England
Tel. Brownhills (0543) 375351

PART No. 88-026-035

DRG. No. AD. 261 .D. 303 SHT. 6 OF 8

MY (1) 319076 R

REF.	VALUE	DESCRIPTION	PART No.
RESISTORS			
R57	100K	Metal Film 1/8W 1%	70-031-120
R58	100K	Metal Film 1/8W 1%	70-031-120
R61	10R	Metal Film 1/8W 1%	70-031-024
R62	10R	Metal Film 1/8W 1%	70-031-024
CAPACITORS			
C32	470uF 10V	Electrolytic Radial	18-013-120
C33	470uF 10V	Electrolytic Radial	18-013-120
C34	2n2 50V	Ceramic Disc	18-001-241
C35	2n2 50V	Ceramic Disc	18-001-241
INDUCTORS			
L1	220µH	RF Choke	22-505-102
L2	220µH	RF Choke	22-505-102
VARIABLE RESISTORS			
VR3	10K/10K LOG	149 (CM472230)	52-219-314
SOCKETS			
JK1		Jacksocket	25-011-226
PRINTED CIRCUIT BOARD			
	AD261	JACK PCB	62-026-030

DRG.No. AD. 261 SHT. 8 OF 8 .C. 303

THE COPYRIGHT OF THIS DRAWING IS OWNED BY AUDIO DEVELOPMENTS LTD. AND ANY REPRODUCTION OF THIS DRAWING IN WHOLE OR PART WITHOUT THEIR WRITTEN AUTHORITY IS FORBIDDEN © 1994

ISS.	REVISION/DATE	SIG.
2	SEE DIF 568 11.3.96	jgm
1	FIRST DIF 391 10.1.94	jgm

DRAWN RDC/AUD39
CHECKED/APP.D. MK
SCALE N/A
P.C.B.No. N/A

TITLE
STEREO ENG MIXER
MONITOR JACK ASSEMBLY

Audio Developments Ltd.
Hall Lane, Walsall Wood, Walsall.
West Midlands, WS9 9AU. England
Tel. Brownhills (0543) 375351

PT.No. 88-026-035

DRG.No. AD. 261 SHT. 8 OF 8 .C. 303

DRG.No. AD. 261 SHT. 1 OF 2 .C. 107

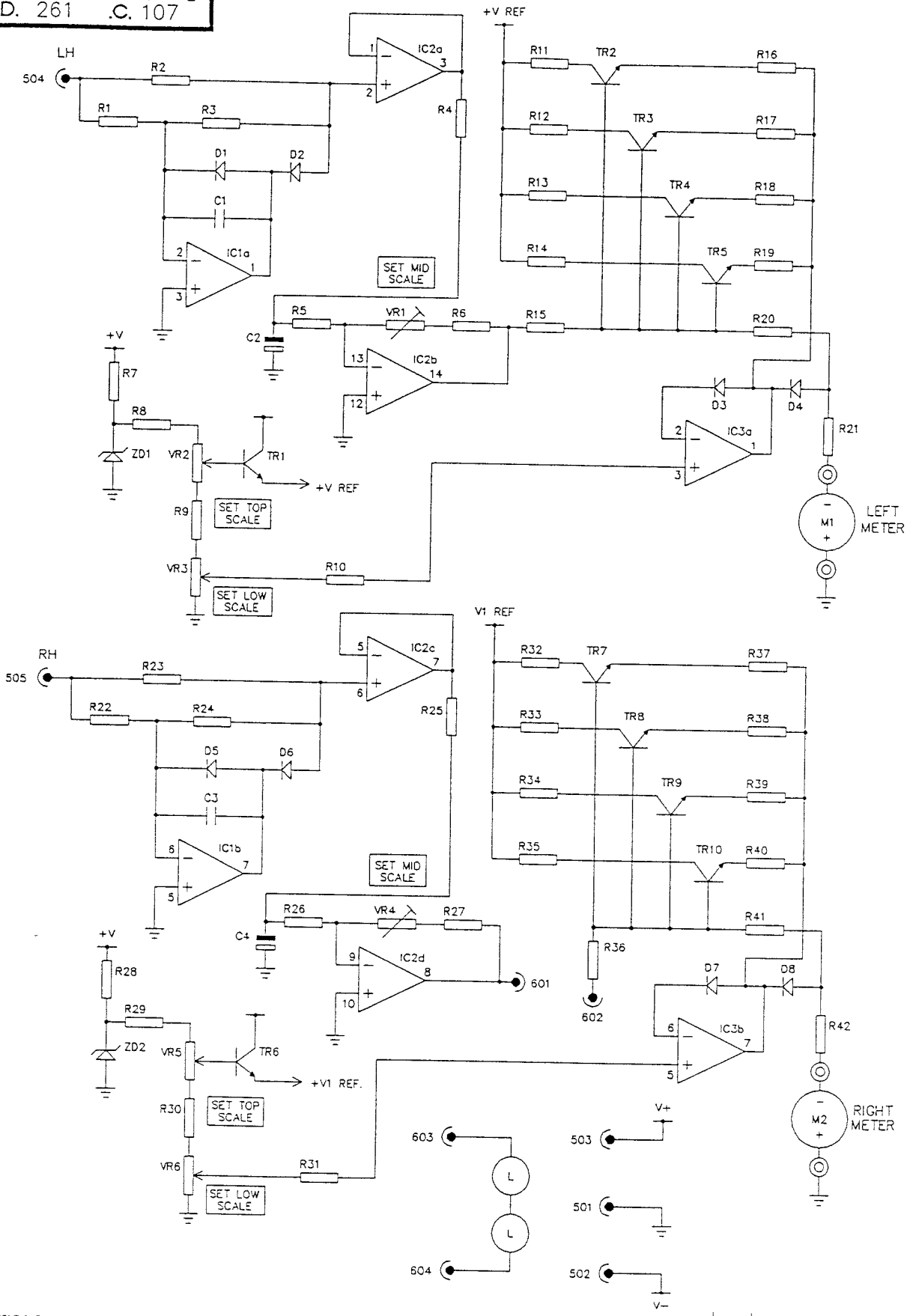

THE COPYRIGHT OF THIS DRAWING IS OWNED BY AUDIO DEVELOPMENTS LTD. AND ANY REPRODUCTION OF THIS DRAWING IN WHOLE OR PART WITHOUT THEIR WRITTEN AUTHORITY IS FORBIDDEN © 1994

DRAWN	RDC/AUD7	TITLE	PEAK PROGRAM METER
CHECKED/APP.D.	MK		
SCALE	N/A		
P.C.B.No.	62-026-031		

Audio Developments Ltd.
Hall Lane, Walsall Wood, Walsall.
West Midlands, WS9 9AU. England
Tel. Brownhills (0543) 375351

ISS.	REVISION/DATE	SIG.
1	FIRST DIF 331 10.1.94	jgm

PT.No. 88-026-031

DRG.No. AD. 261 SHT. 1 OF 2 .C. 107

DRG.No. AD. 261 SHT. 1 OF 2 .C. 107

DRG. No. AD. 261 .D. 307 SHT. 1 OF 7

PROJECTION

DO NOT SCALE

DRG. No. AD. 261 .D. 307 SHT. 1 OF 7

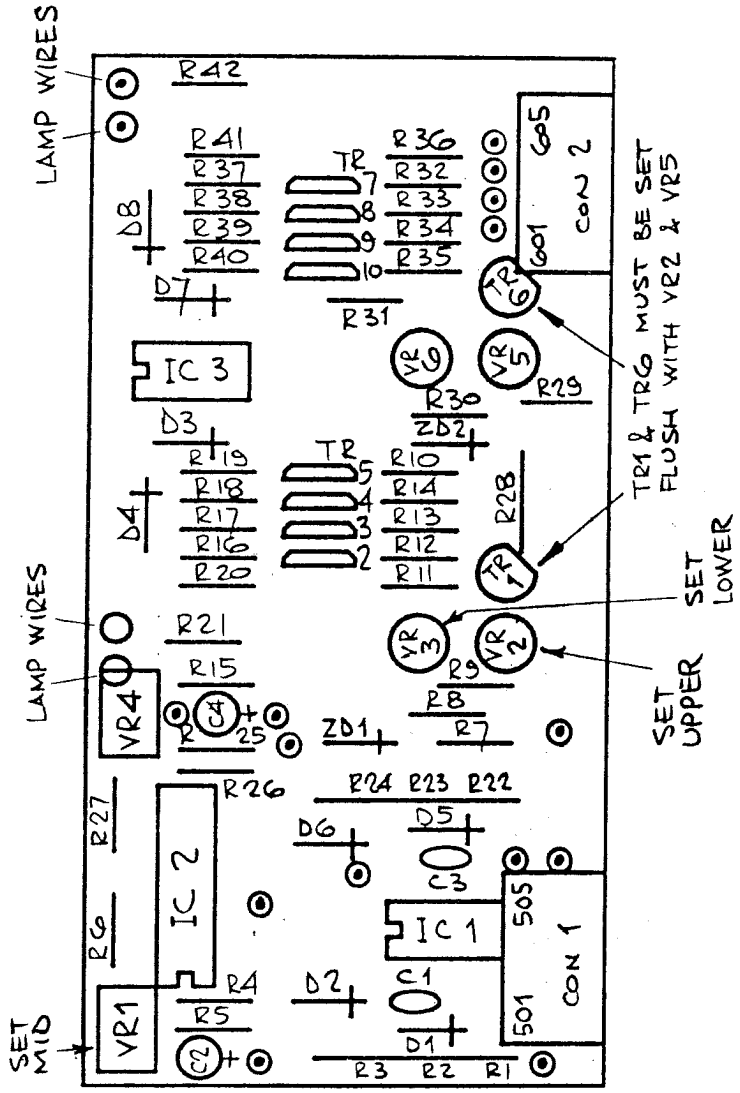

ISS.	REVISION/DATE	SIG.
2	R29 MOVED. DIF 545 22.5.95	jgm
1	FIRST DF 391 13.1.94	jgm

THE COPYRIGHT OF THIS DRAWING IS OWNED BY AUDIO DEVELOPMENTS LTD. AND ANY REPRODUCTION OF THIS DRAWING IN WHOLE OR PART WITHOUT THEIR WRITTEN AUTHORITY IS FORBIDDEN © 1993

DRAWN jgm

CHECKED/APP'D. ✓

SCALE 150%

P.C.B. No. 62-026-031

TITLE: PPM BOARD

Audio Developments Ltd.
Hall Lane, Walsall Wood, Walsall.
West Midlands, WS9 9AU. England
Tel. Brownhills (0543) 375351

PART No. 88-026-031

DRG. No. AD. 261 .D. 307 SHT. 1 OF 7

MY (1) 319076 R

DRG.No. AD. 261 SHT. 3 OF 7 .C. 307

REF.	VALUE	DESCRIPTION	PART No.
RESISTORS			
R1, R2, R3	100K	Resistor Array	70-090-802
R4	47R	Metal Film 1/8W 1%	70-031-040
R5	100K	Metal Film 1/8W 1%	70-031-120
R6	300K	Metal Film 1/8W 1%	70-031-131
R7	10K	Metal Film 1/8W 1%	70-031-096
R8	1K	Metal Film 1/8W 1%	70-031-072
R9	10K	Metal Film 1/8W 1%	70-031-096
R10	22K	Metal Film 1/8W 1%	70-031-104
R11	22K	Metal Film 1/8W 1%	70-031-104
R12	39K	Metal Film 1/8W 1%	70-031-108
R13	120K	Metal Film 1/8W 1%	70-031-122
R14	390K	Metal Film 1/8W 1%	70-031-134
R15	24K	Metal Film 1/8W 1%	70-031-105
R16	20K	Metal Film 1/8W 1%	70-031-103
R17	30K	Metal Film 1/8W 1%	70-031-107
R18	68K	Metal Film 1/8W 1%	70-031-116
R19	120K	Metal Film 1/8W 1%	70-031-122
R20	82K	Metal Film 1/8W 1%	70-031-118
R21	3K6	Metal Film 1/8W 1%	70-031-085
R22, R23, R24	100K	Resistor Array	70-090-802
R25	47R	Metal Film 1/8W 1%	70-031-040
R26	100K	Metal Film 1/8W 1%	70-031-120
R27	300K	Metal Film 1/8W 1%	70-031-131
R28	10K	Metal Film 1/8W 1%	70-031-096
R29	1K	Metal Film 1/8W 1%	70-031-072
R30	10K	Metal Film 1/8W 1%	70-031-096
R31	22K	Metal Film 1/8W 1%	70-031-104
R32	22K	Metal Film 1/8W 1%	70-031-104
R33	39K	Metal Film 1/8W 1%	70-031-108
R34	120K	Metal Film 1/8W 1%	70-031-122
R35	390K	Metal Film 1/8W 1%	70-031-134
R36	24K	Metal Film 1/8W 1%	70-031-105
R37	20K	Metal Film 1/8W 1%	70-031-103
R38	30K	Metal Film 1/8W 1%	70-031-107
R39	68K	Metal Film 1/8W 1%	70-031-116
R40	120K	Metal Film 1/8W 1%	70-031-122
R41	82K	Metal Film 1/8W 1%	70-031-118
R42	3K6	Metal Film 1/8W 1%	70-031-085
CAPACITORS			
C1	22pF 50V	Ceramic Disc	18-001-217
C2	10uF 16V	Electrolytic Radial	18-015-213
C3	22pF 50V	Ceramic Disc	18-001-217
C4	10uF 16V	Electrolytic Radial	18-015-213
DIODES			
D1	IN4148	HI/S.D035	72-010-001
D2	IN4148	HI/S.D035	72-010-001
D3	IN4148	HI/S.D035	72-010-001
D4	IN4148	HI/S.D035	72-010-001
D5	IN4148	HI/S.D035	72-010-001
D6	IN4148	HI/S.D035	72-010-001
D7	IN4148	HI/S.D035	72-010-001
D8	IN4148	HI/S.D035	72-010-001

THE COPYRIGHT OF THIS DRAWING IS OWNED BY AUDIO DEVELOPMENTS LTD. AND ANY REPRODUCTION OF THIS DRAWING IN WHOLE OR PART WITHOUT THEIR WRITTEN AUTHORITY IS FORBIDDEN © 1984

ISS.	REVISION/DATE	SIG.
1	FIRST DIF 391 13.1.84	jam JJ

DRAWN RDC/AUD25
CHECKED/APP.D. MK
SCALE N/A
P.C.B.No. N/A

TITLE
STEREO ENG MIXER
PEAK PROGRAM METER
(BBC VERSION)

Audio Developments Ltd.
Hall Lane, Walsall Wood, Walsall.
West Midlands, WS9 9AU. England
Tel. Brownhills (0543) 375351

PT.No. 88-026-031

DRG.No. AD. 261 SHT. 3 OF 7 .C. 307

REF.	VALUE	DESCRIPTION	PART No.
ZENER DIODES			
ZD1	5V6	400mW	72-012-110
ZD2	5V6	400mW	72-012-110
TRANSISTORS			
TR1	BC549C	NPN TO-92	72-021-001
TR2	ZTX109C	NPN E Line	72-021-003
TR3	ZTX109C	NPN E Line	72-021-003
TR4	ZTX109C	NPN E Line	72-021-003
TR5	ZTX109C	NPN E Line	72-021-003
TR6	BC549C	NPN TO-92	72-021-001
TR7	ZTX109C	NPN E Line	72-021-003
TR8	ZTX109C	NPN E Line	72-021-003
TR9	ZTX109C	NPN E Line	72-021-003
TR10	ZTX109C	NPN E Line	72-021-003
INTEGRATED CIRCUITS			
IC1	TL062CP	Dual OP.AMP	74-120-002
IC2	MC3405P	Dual COMP/AMP	74-130-006
IC3	TL062CP	Dual OP.AMP	74-120-002
VARIABLE RESISTORS			
VR1	500K	Trim Cermet 1/4"	32-050-034
VR2	10K	Trim Cermet 1/4"	32-050-049
VR3	1K	Trim Cermet 1/4"	32-050-046
VR4	500K	Trim Cermet 1/4"	32-050-034
VR5	10K	Trim Cermet 1/4"	32-050-049
VR6	1K	Trim Cermet 1/4"	32-050-046
METERS			
M1		DIR 14 BBC PPM	61-010-001
M2		DIR 14 BBC PPM+BATT	61-010-002
PRINTED CIRCUIT BOARD			
	AD261	PPM DRIVER BOARD	62-026-031

DRG.No. AD. 261 .C. 307 SHT. 4 OF 7

THE COPYRIGHT OF THIS DRAWING IS OWNED BY AUDIO DEVELOPMENTS LTD. AND ANY REPRODUCTION OF THIS DRAWING IN WHOLE OR PART WITHOUT THEIR WRITTEN AUTHORITY IS FORBIDDEN © 1994

ISS.	REVISION/DATE	SIG.
1	FIRST DIF 391	jgm

DRAWN RDC/AUD26
CHECKED/APP.D. MK
SCALE N/A
P.C.B.No. N/A

TITLE
STEREO ENG MIXER
PEAK PROGRAM METER
(BBC VERSION)

Audio Developments Ltd.
Hall Lane, Walsall Wood, Walsall.
West Midlands, WS9 9AU. England
Tel. Brownhills (0543) 375351

PT.No. 88-026-031

DRG.No. AD. 261 .C. 307 SHT. 4 OF 7

DRG.No. AD. 261 SHT. 6 OF 7 .C. 307

REF.	VALUE	DESCRIPTION	PART No.
RESISTORS			
R1, R2, R3	100K	Resistor Array	70-090-802
R4	47R	Metal Film 1/8W 1%	70-031-040
R5	100K	Metal Film 1/8W 1%	70-031-120
R6	300K	Metal Film 1/8W 1%	70-031-131
R7	10K	Metal Film 1/8W 1%	70-031-096
R8	1K	Metal Film 1/8W 1%	70-031-072
R9	10K	Metal Film 1/8W 1%	70-031-096
R10	22K	Metal Film 1/8W 1%	70-031-104
R11	30K	Metal Film 1/8W 1%	70-031-107
R12	120K	Metal Film 1/8W 1%	70-031-122
R13	300K	Metal Film 1/8W 1%	70-031-131
R14	1M	Metal Film 1/8W 1%	70-031-144
R15	36K	Metal Film 1/8W 1%	70-031-109
R16	33K	Metal Film 1/8W 1%	70-031-108
R17	100K	Metal Film 1/8W 1%	70-031-120
R18	180K	Metal Film 1/8W 1%	70-031-126
R19	330K	Metal Film 1/8W 1%	70-031-132
R20	470K	Metal Film 1/8W 1%	70-031-136
R21	3K6	Metal Film 1/8W 1%	70-031-085
R22, R23, R24	100K	Resistor Array	70-090-802
R25	47R	Metal Film 1/8W 1%	70-031-040
R26	100K	Metal Film 1/8W 1%	70-031-120
R27	300K	Metal Film 1/8W 1%	70-031-131
R28	10K	Metal Film 1/8W 1%	70-031-096
R29	1K	Metal Film 1/8W 1%	70-031-072
R30	10K	Metal Film 1/8W 1%	70-031-096
R31	22K	Metal Film 1/8W 1%	70-031-104
R32	30K	Metal Film 1/8W 1%	70-031-107
R33	120K	Metal Film 1/8W 1%	70-031-122
R34	300K	Metal Film 1/8W 1%	70-031-131
R35	1M	Metal Film 1/8W 1%	70-031-144
R36	36K	Metal Film 1/8W 1%	70-031-109
R37	33K	Metal Film 1/8W 1%	70-031-108
R38	100K	Metal Film 1/8W 1%	70-031-120
R39	180K	Metal Film 1/8W 1%	70-031-126
R40	330K	Metal Film 1/8W 1%	70-031-132
R41	470K	Metal Film 1/8W 1%	70-031-136
R42	3K6	Metal Film 1/8W 1%	70-031-085
CAPACITORS			
C1	22pF 50V	Ceramic Disc	18-001-217
C2	10uF 16V	Electrolytic Radial	18-015-213
C3	22pF 50V	Ceramic Disc	18-001-217
C4	10uF 16V	Electrolytic Radial	18-015-213
DIODES			
D1	IN4148	HI/S.D035	72-010-001
D2	IN4148	HI/S.D035	72-010-001
D3	IN4148	HI/S.D035	72-010-001
D4	IN4148	HI/S.D035	72-010-001
D5	IN4148	HI/S.D035	72-010-001
D6	IN4148	HI/S.D035	72-010-001
D7	IN4148	HI/S.D035	72-010-001
D8	IN4148	HI/S.D035	72-010-001

THE COPYRIGHT OF THIS DRAWING IS OWNED BY AUDIO DEVELOPMENTS LTD. AND ANY REPRODUCTION OF THIS DRAWING IN WHOLE OR PART WITHOUT THEIR WRITTEN AUTHORITY IS FORBIDDEN © 19

ISS.	REVISION/DATE	SIG.
1	DIF FIRST 391 13.1.94	JJH

DRAWN RDC/AUD37
CHECKED/APP.D. MK
SCALE N/A
P.C.B.No. N/A

TITLE
STEREO ENG MIXER
PEAK PROGRAM METER
(N10 & VARIANTS)

Audio Developments Ltd.
Hall Lane, Walsall Wood, Walsall.
West Midlands, WS9 9AU. England
Tel. Brownhills (0543) 375351

PT.No. 88-026-931

DRG.No. AD. 261 SHT. 6 OF 7 .C. 307

REF.	VALUE	DESCRIPTION	PART No.
ZENER DIODES			
ZD1	5V6	400mW	72-012-110
ZD2	5V6	400mW	72-012-110
TRANSISTORS			
TR1	BC549C	NPN TO-92	72-021-001
TR2	ZTX109C	NPN E Line	72-021-003
TR3	ZTX109C	NPN E Line	72-021-003
TR4	ZTX109C	NPN E Line	72-021-003
TR5	ZTX109C	NPN E Line	72-021-003
TR6	BC549C	NPN TO-92	72-021-001
TR7	ZTX109C	NPN E Line	72-021-003
TR8	ZTX109C	NPN E Line	72-021-003
TR9	ZTX109C	NPN E Line	72-021-003
TR10	ZTX109C	NPN E Line	72-021-003
INTEGRATED CIRCUITS			
IC1	TL062CP	Dual OP.AMP	74-120-002
IC2	MC3405P	Dual COMP/AMP	74-130-006
IC3	TL062CP	Dual OP.AMP	74-120-002
VARIABLE RESISTORS			
VR1	500K	Trim Cermet 1/4"	32-050-034
VR2	10K	Trim Cermet 1/4"	32-050-049
VR3	1K	Trim Cermet 1/4"	32-050-046
VR4	500K	Trim Cermet 1/4"	32-050-034
VR5	10K	Trim Cermet 1/4"	32-050-049
VR6	1K	Trim Cermet 1/4"	32-050-046
METERS			
M1		DIR 14 BBC PPM	61-010-001
M2		DIR 14 BBC PPM+BATT	61-010-002
PRINTED CIRCUIT BOARD			
	AD261	PPM DRIVER BOARD	62-026-031

THE COPYRIGHT OF THIS DRAWING IS OWNED BY AUDIO DEVELOPMENTS LTD. AND ANY REPRODUCTION OF THIS DRAWING IN WHOLE OR PART WITHOUT THEIR WRITTEN AUTHORITY IS FORBIDDEN © 1994

ISS.	REVISION/DATE	SIG.
1	FIRST DLF 391 13.1.94	jam

DRAWN RDC/AUD41
CHECKED/APP.D MK
SCALE N/A
P.C.B.No. N/A

TITLE: STEREO ENG MIXER PEAK PROGRAM METER (N10 & VARIANTS)

Audio Developments Ltd.
Hall Lane, Walsall Wood, Walsall.
West Midlands, WS9 9AU. England
Tel. Brownhills (0543) 375351

PT.No. 88-026-931

DRG.No. AD. 261 SHT. 7 OF 7 .C. 307

DRG.No. AD. 261 SHT. 7 OF 7 .C. 307

SHT. 1 OF 2 .C. 113 DRG.No. AD. 261

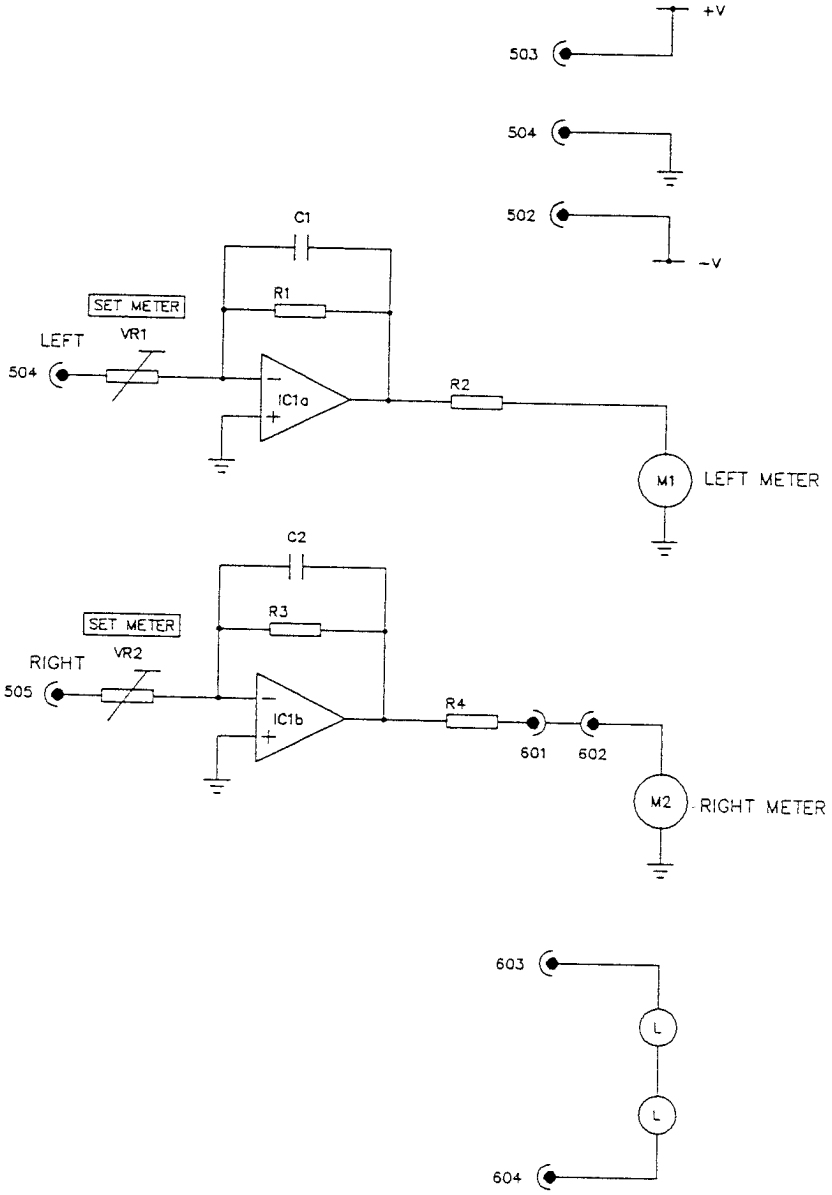

THE COPYRIGHT OF THIS DRAWING IS OWNED BY AUDIO DEVELOPMENTS LTD. AND ANY REPRODUCTION OF THIS DRAWING IN WHOLE OR PART WITHOUT THEIR WRITTEN AUTHORITY IS FORBIDDEN © 1994

DRAWN	RDC/AUD14
CHECKED/APP.D.	MK
SCALE	N/A
P.C.B.No.	62-026-032

TITLE

AD 261

VU DRIVER

Audio Developments Ltd.
Hall Lane, Walsall Wood, Walsall.
West Midlands, WS9 9AU. England
Tel. Brownhills (0543) 375351

ISS.	REVISION/DATE	SIG.
1	FIRST DIF 394 10.1.94	jgm

PT.No. 88-026-032

DRG.No. AD. 261 SHT. 1 OF 2 .C. 113

DRG. No. AD. 261 .D. 313 SHT. 1 OF 3

PROJECTION

DO NOT SCALE

DRG. No. AD. 261 .D. 313 SHT. 1 OF 3

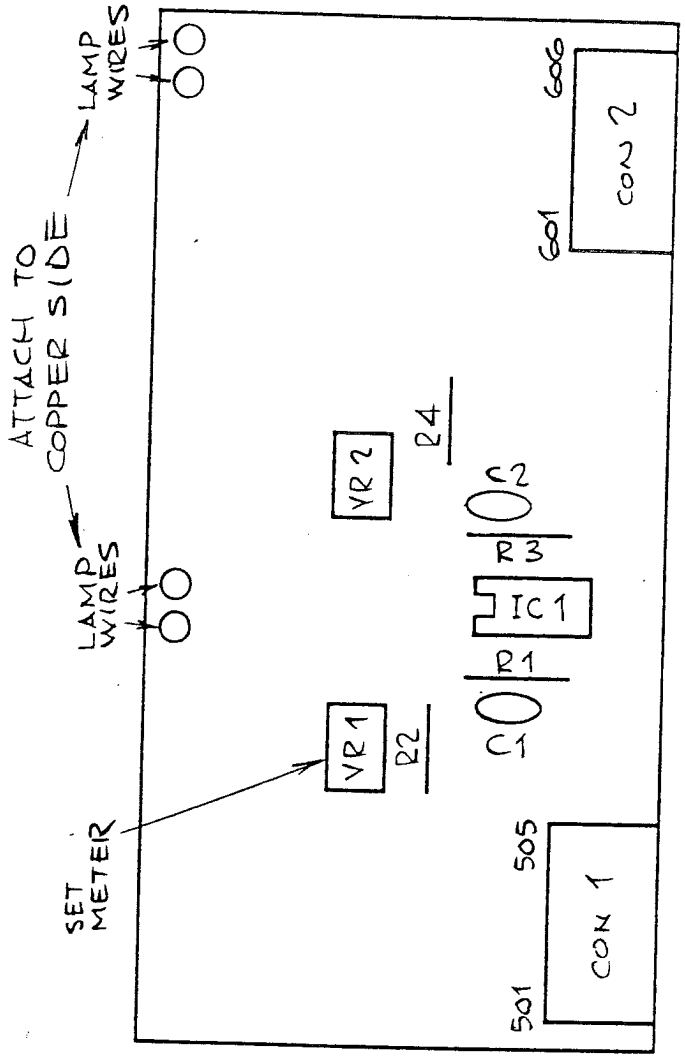

THE COPYRIGHT OF THIS DRAWING IS OWNED BY AUDIO DEVELOPMENTS LTD AND ANY REPRODUCTION OF THIS DRAWING IN WHOLE OR PART WITHOUT THEIR WRITTEN AUTHORITY IS FORBIDDEN © 1993

ISS.	REVISION/DATE	SIG.
1	FIRST DIF 391 10.1.94	jgm

DRAWN jgm

CHECKED/APP'D. R

SCALE 150 %

P.C.B. No. 62-026-032

TITLE VU

Audio Developments Ltd.
Hall Lane, Walsall Wood, Walsall.
West Midlands, WS9 9AU. England
Tel. Brownhills (0543) 375351

PART No. 88-026-032

DRG. No. AD. 261 .D. 313 SHT. 1 OF 3

MY (1) 319076 P

DRG.No. AD. 261 SHT. 3 OF 3 .C. 313

REF.	VALUE	DESCRIPTION	PART No.
RESISTORS			
R1	470K	Metal Film 1/8W 1%	70-033-136
R2	3K6	Metal Film 1/8W 1%	70-033-085
R3	470K	Metal Film 1/8W 1%	70-033-136
R4	3K6	Metal Film 1/8W 1%	70-033-085
CAPACITORS			
C1	2p2 50V	Ceramic Disc	18-001-205
C2	2p2 50V	Ceramic Disc	18-001-205
VARIABLE RESISTORS			
VR1	500K	Trim Cermet 1/4"	32-050-034
VR2	500K	Trim Cermet 1/4"	32-050-034
INTEGRATED CIRCUITS			
IC1	TL062CP	Dual OP.AMP	74-120-002
METERS			
M1		Director 14 VU	61-010-000
M2		Director 14 VU	61-010-000
PRINTED CIRCUIT BOARD			
	AD261	VU DRIVER BOARD	62-026-032

THE COPYRIGHT OF THIS DRAWING IS OWNED BY AUDIO DEVELOPMENTS LTD. AND ANY REPRODUCTION OF THIS DRAWING IN WHOLE OR PART WITHOUT THEIR WRITTEN AUTHORITY IS FORBIDDEN © 1994

ISS.	REVISION/DATE	SIG.
1	FIRST DIF 391 10.1.94	jgr jj

DRAWN RDC/AUD27

CHECKED/APP.D. MK

SCALE N/A

P.C.B.No. N/A

TITLE

STEREO ENG MIXER

VU DRIVER

Audio Developments Ltd.
Hall Lane, Walsall Wood, Walsall.
West Midlands, WS9 9AU. England
Tel. Brownhills (0543) 375351

PT.No. 88-026-032

DRG.No. AD. 261 SHT. 3 OF 3 .C. 313

DRG.No. AD. 261 SHT. 1 OF 2 .C. 112

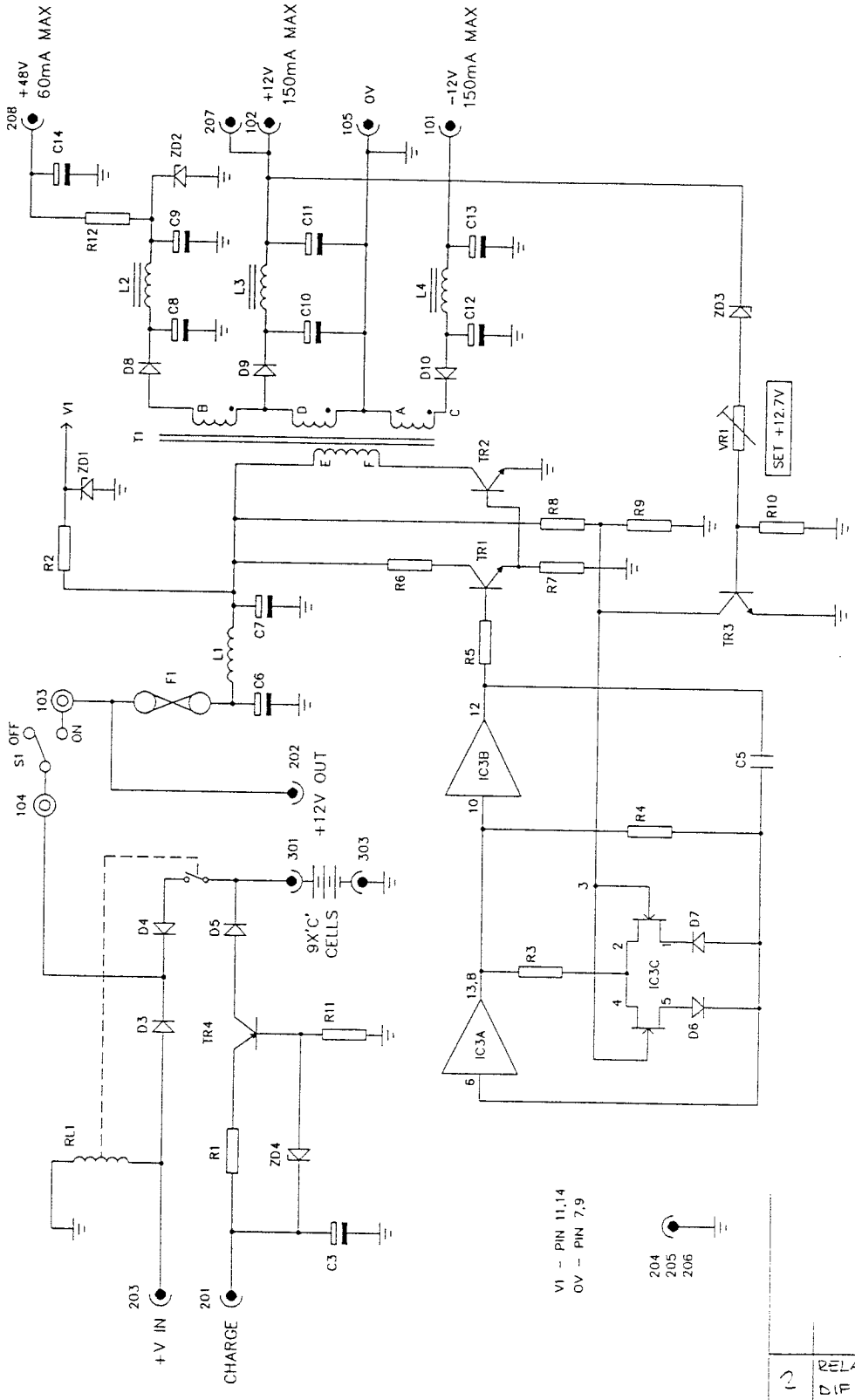

THE COPYRIGHT OF THIS DRAWING IS OWNED BY AUDIO DEVELOPMENTS LTD. AND ANY REPRODUCTION OF THIS DRAWING IN WHOLE OR PART WITHOUT THEIR WRITTEN AUTHORITY IS FORBIDDEN © 1992

ISS.	REVISION/DATE	SIG.
2	RELAY ADDED DIF 401 8.3.94	jam
1	FIRST DIF 391 13.1.94	jam

DRAWN	RDC/AUD16
CHECKED/APP.D.	
SCALE	N/A
P.C.B.No.	62-026-036

TITLE

AD 261 ENG MIXER
DC - DC CONVERTER & PSU
CIRCUIT DIAGRAM

Audio Developments Ltd.
Hall Lane, Walsall Wood, Walsall.
West Midlands, WS9 9AU. England
Tel. Brownhills (0543) 375351

PT.No. 88-026-030

DRG.No. AD. 261 SHT. 1 OF 2 .C. 112

DRG.No. AD. 261 SHT. 1 OF 2 .C. 112

DRG. No. AD. 261 .D. 312 SHT. 1 OF 4

PROJECTION

DO NOT SCALE

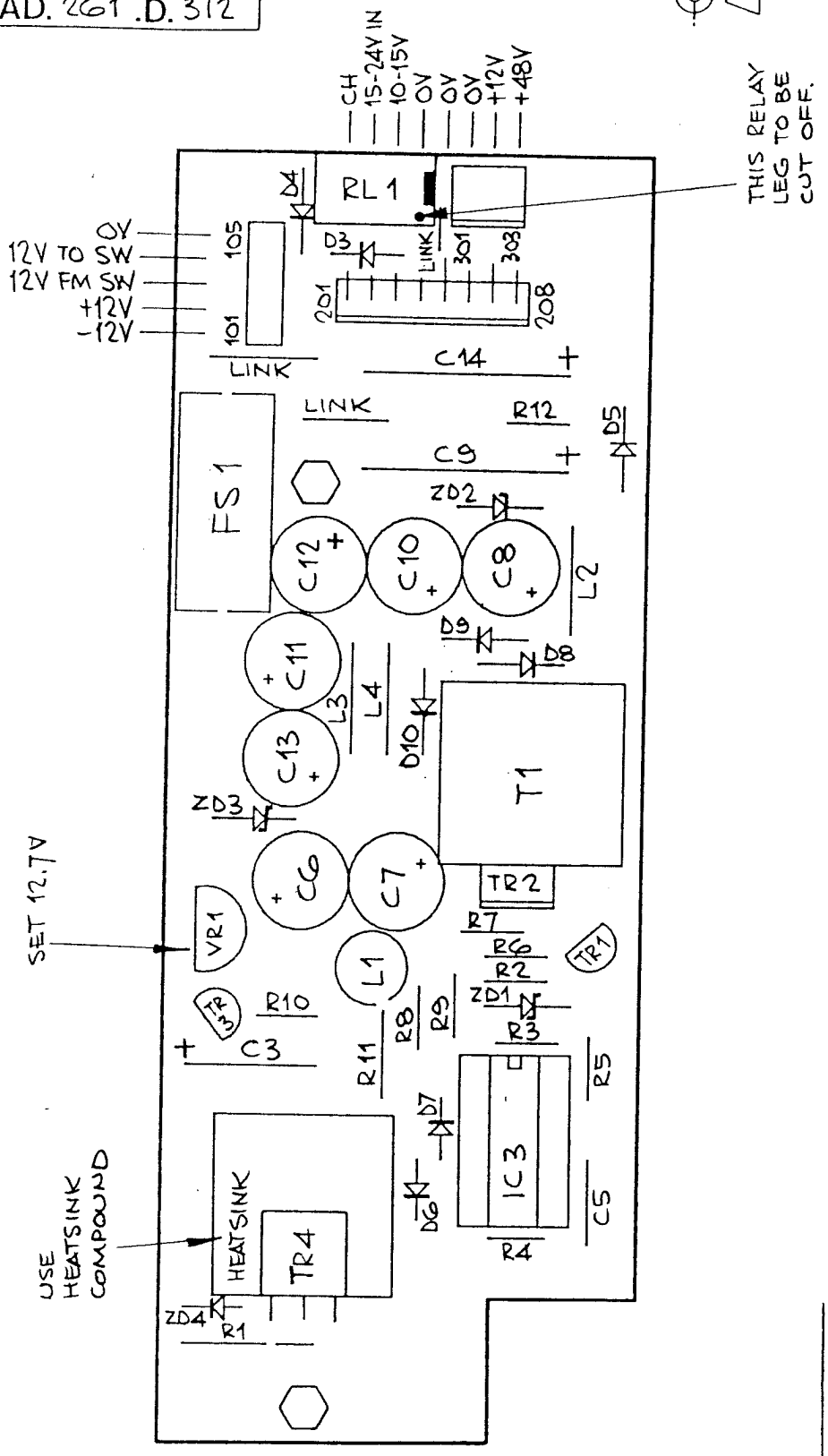

ISS.	REVISION/DATE	SIG.
3	'CUT LEG' NOTE ADDED. RELAY POLARITY ADDED. DIF 540 17.5.95	jgm
2	REDESIGNED/REDRAWN DIF 401 8.3.94	jgm

THE COPYRIGHT OF THIS DRAWING IS OWNED BY AUDIO DEVELOPMENTS LTD AND ANY REPRODUCTION OF THIS DRAWING IN WHOLE OR PART WITHOUT THEIR WRITTEN AUTHORITY IS FORBIDDEN © 1994

DRAWN	jgm
CHECKED/APP'D.	RFT
SCALE	141%
P.C.B. No.	62-026-036

TITLE: CONVERTER

Audio Developments Ltd.
Hall Lane, Walsall Wood, Walsall.
West Midlands, WS9 9AU. England
Tel. Brownhills (0543) 375351

PART No. 88-026-030

DRG. No. AD. 261 .D. 312 SHT. 1 OF 4

DRG. No. AD. 261 .D. 312 SHT. 1 OF 4

SHT. 3 OF 4 .C. 312 DRG.No. AD. 261

REF.	VALUE	DESCRIPTION	PART No.
RESISTORS			
R1	5R1	Metal Film	70-036-017
R2	82R	Metal Film 1/4W 1%	70-033-046
R3	4K7	Metal Film 1/8W 1%	70-031-088
R4	100K	Metal Film 1/8W 1%	70-031-120
R5	1K5	Metal Film 1/8W 1%	70-031-076
R6	470R	Metal Film 1/8W 1%	70-031-064
R7	150R	Metal Film 1/8W 1%	70-031-052
R8	12K	Metal Film 1/8W 1%	70-031-098
R9	39K	Metal Film 1/8W 1%	70-031-110
R10	1K	Metal Film 1/8W 1%	70-031-072
R11	2K2	Metal Film 1/8W 1%	70-031-080
R12	100R	Metal Film 1/8W 1%	70-031-048
CAPACITORS			
C1		Spare	
C2		Spare	
C3	22uF 25V	Electrolytic Axial	18-010-312
C4		Spare	
C5	330pF 160V	Polystyrene Axial	18-060-324
C6	470uF 25V	Electrolytic Radial	18-013-320
C7	470uF 25V	Electrolytic Radial	18-013-320
C8	100uF 63V	Electrolytic Radial	18-013-716
C9	100uF 63V	Electrolytic Axial	18-010-716
C10	470uF 25V	Electrolytic Radial	18-013-320
C11	470uF 25V	Electrolytic Radial	18-013-320
C12	470uF 25V	Electrolytic Radial	18-013-320
C13	470uF 25V	Electrolytic Radial	18-013-320
C14	100uF 63V	Electrolytic Axial	18-010-716
DIODES			
D1		Spare	
D2		Spare	
D3	IN4001	50V 1A	72-011-001
D4	IN4001	50V 1A	72-011-001
D5	IN4001	50V 1A	72-011-001
D6	IN4148	HI/S.D035	72-010-001
D7	IN4148	HI/S.D035	72-010-001
D8	BY206	SIGNAL	72-010-004
D9	BY206	SIGNAL	72-010-004
D10	BY206	SIGNAL	72-010-004
ZENER DIODES			
ZD1	18V	1.3W	72-012-222
ZD2	56V	1.3W	72-012-234
ZD3	11V	400mW	72-012-117
ZD4	2V4	400mW	72-012-101
TRANSISTORS			
TR1	2N3904	NPN TO-92	72-021-004
TR2	BD131	NPN POWER TO-126	72-023-003
TR3	BC549C	NPN TO-92	72-021-001
TR4	TIP115	PNP POWER TO-220	72-024-005

ISS.	REVISION/DATE	SIG.
2	R11 was 70-031-088 R1 was 70-036-017 DIF 452 28.6.94	JJM
1	FIRST DIF 391 10.1.94	JJM

THE COPYRIGHT OF THIS DRAWING IS OWNED BY AUDIO DEVELOPMENTS LTD. AND ANY REPRODUCTION OF THIS DRAWING IN WHOLE OR PART WITHOUT THEIR WRITTEN AUTHORITY IS FORBIDDEN © 1994

DRAWN RDC/AUD28

CHECKED/APP.D. MK

SCALE N/A

P.C.B.No. N/A

TITLE

STEREO ENG MIXER

DC-DC CONVERTER

Audio Developments Ltd.
Hall Lane, Walsall Wood, Walsall.
West Midlands, WS9 9AU. England
Tel. Brownhills (0543) 375351

PT.No. 88-026-030

DRG.No. AD. 261 SHT. 3 OF 4 .C. 312

REF.	VALUE	DESCRIPTION	PART No.
INTEGRATED CIRCUITS			
IC3	CD4007UBE	Dual Complementry Pair with Invertor	74-434-007
INDUCTORS			
L1	220uH	Choke RF R/L	22-505-203
L2	220uH	Choke (SC10) A/L	22-505-102
L3	220uH	Choke (SC10) A/L	22-505-102
L4	220uH	Choke (SC10) A/L	22-505-102
TRANSFORMERS			
T1	RM7/250	Ferrite Trans	86-015-021
FUSE			
F1	1A A/S	20mm HRC	36-114-001
VARIABLE RESISTORS			
VR1	10K	Side Adjust Carbon	32-030-027
HEATSINK			
	21°C/W	TO-220 Heatsink	72-034-001
FUSEHOLDER			
		20mm P.C. MOUNT	36-410-003
PRINTED CIRCUIT BOARD			
	AD261	DC CONVERTOR	62-026-036
RELAY			
RL1	IP CO	PC Mount	69-031-001

DRG.No. AD. 261 SHT. 4 OF 4 .C. 312

ISS.	REVISION/DATE	SIG.
2	RELAY ADDED DIF 401 8.3.94	jg
1	FIRST DIF 391 10.1.94	jg

THE COPYRIGHT OF THIS DRAWING IS OWNED BY AUDIO DEVELOPMENTS LTD. AND ANY REPRODUCTION OF THIS DRAWING IN WHOLE OR PART WITHOUT THEIR WRITTEN AUTHORITY IS FORBIDDEN © 1994

DRAWN RDC/AUD29

CHECKED/APP'D MVK

SCALE N/A

P.C.B.No. N/A

TITLE

STEREO ENG MIXER

DC-DC CONVERTER

Audio Developments Ltd.
Hall Lane, Walsall Wood, Walsall.
West Midlands, WS9 9AU. England
Tel. Brownhills (0543) 375351

PT.No. 88-026-030

DRG.No. AD. 261 SHT. 4 OF 4 .C. 312

DRG.No. AD. 261 .C. 114 SHT. 1 OF 1

DRG.No. AD. 261 .C. 114 SHT. 1 OF 1

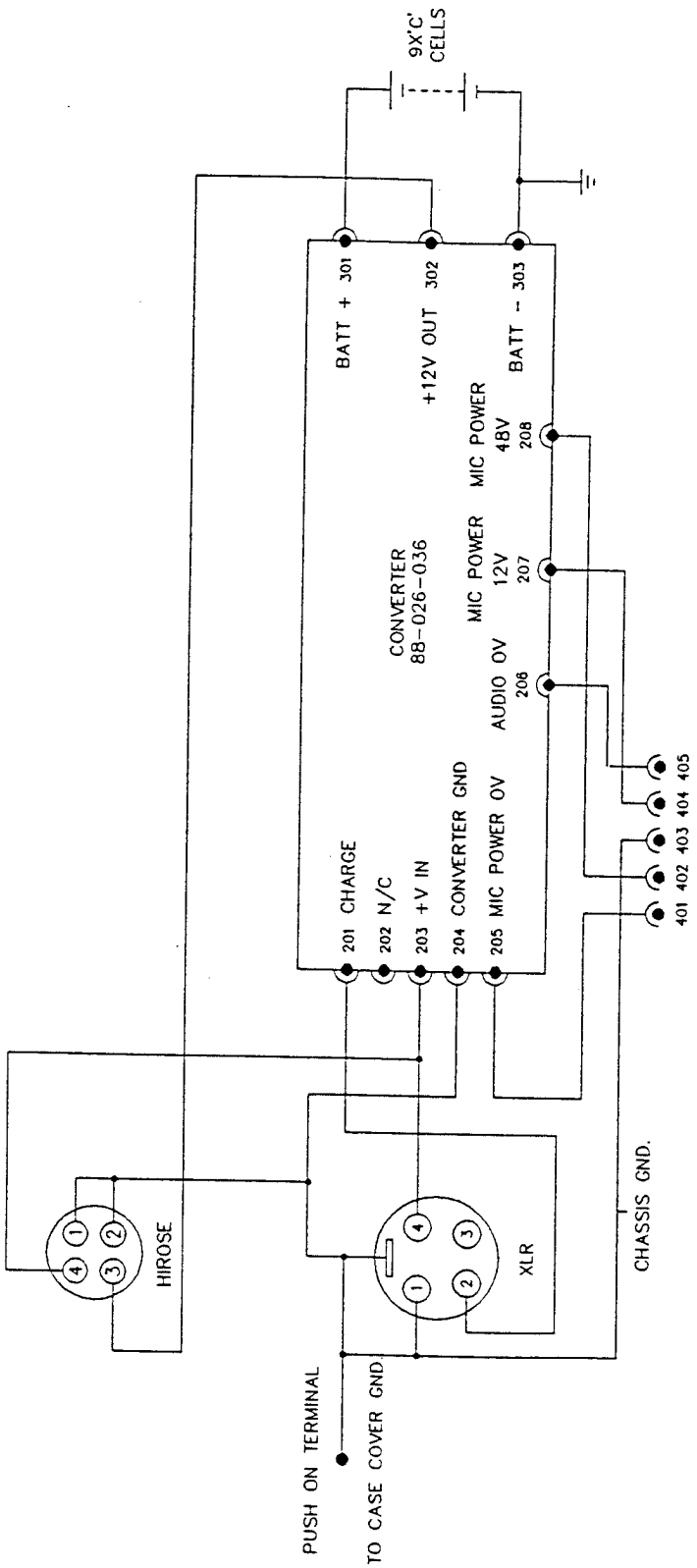

THE COPYRIGHT OF THIS DRAWING IS OWNED BY AUDIO DEVELOPMENTS LTD. AND ANY REPRODUCTION OF THIS DRAWING IN WHOLE OR PART WITHOUT THEIR WRITTEN AUTHORITY IS FORBIDDEN © 1994

DRAWN RDC/AUD17	TITLE		
CHECKED/APP.D. MK	AD 261 POWERING		
SCALE N/A			
P.C.B.No. N/A			

Audio Developments Ltd.
Hall Lane, Walsall Wood, Walsall.
West Midlands, WS9 9AU. England
Tel. Brownhills (0543) 375351

ISS.	REVISION/DATE	SIG.
1	FIRST DIF 391 10.1.94	jgm

PT.No. N/A

DRG.No. AD. 261 .C. 114 SHT. 1 OF 1

DRG. No. AD. 261 .D. 311 SHT. 4 OF 4

PROJECTION

DO NOT SCALE

DRG. No. AD. 261 .D. 311 SHT. 4 OF 4

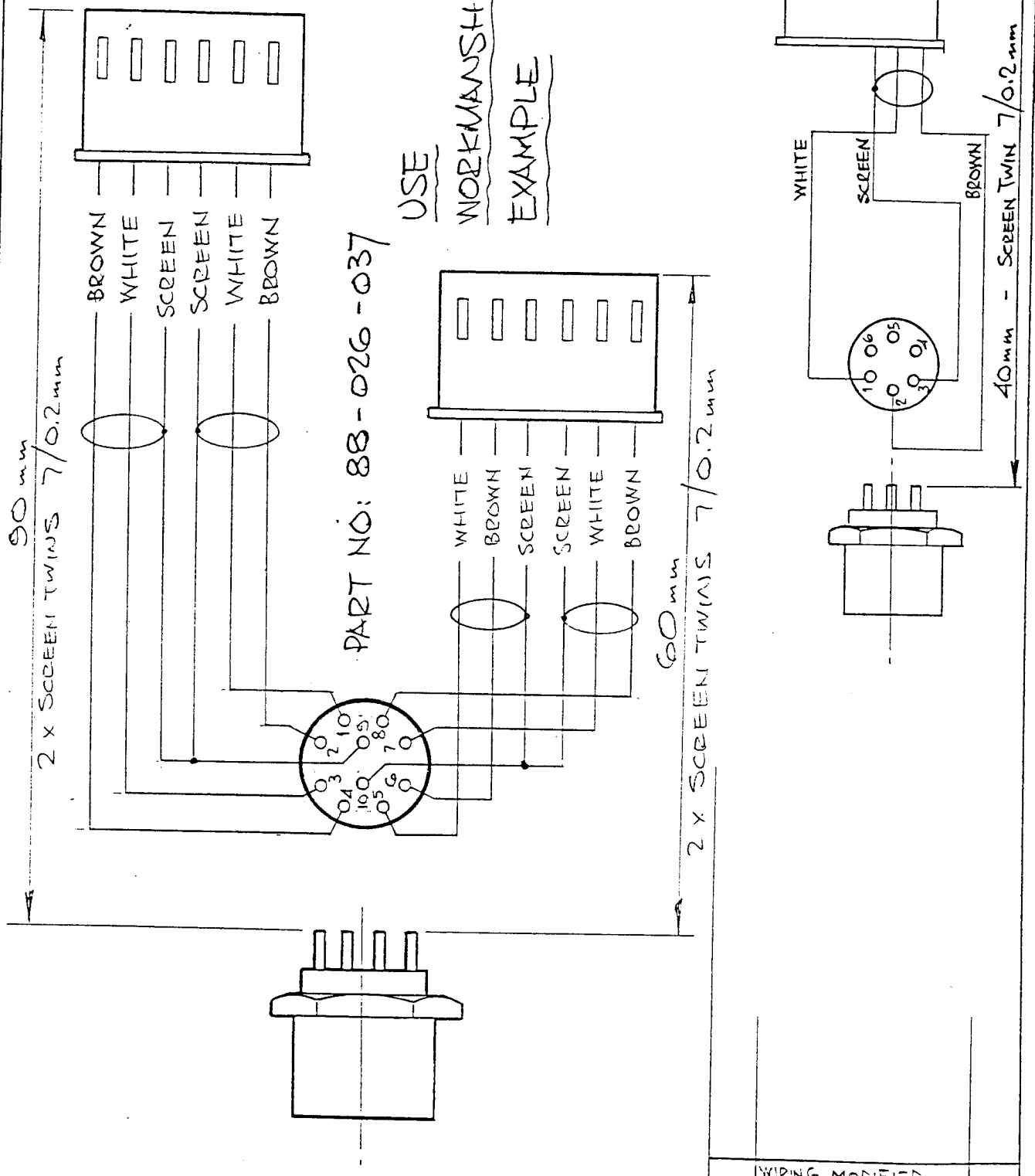

THE COPYRIGHT OF THIS DRAWING IS OWNED BY AUDIO DEVELOPMENTS LTD AND ANY REPRODUCTION OF THIS DRAWING IN WHOLE OR PART WITHOUT THEIR WRITTEN AUTHORITY IS FORBIDDEN © 1992

ISS.	REVISION/DATE	SIG.
2	WIRING MODIFIED FOR NEW CASE. DIF 343 29.4.93	jgm
1	FIRST DIF 294 13.7.92	jgm

DRAWN jgm

CHECKED/APP'D

SCALE N/A

P.C.B. No. N/A

TITLE: 6 & 10 WAY CONNECTORS WIRING

Audio Developments Ltd.
Hall Lane, Walsall Wood, Walsall.
West Midlands, WS9 9AU. England
Tel. Brownhills (0543) 375351

PART No. SEE ABOVE

DRG. No. AD. 261 .D. 311 SHT. 4 OF 4

MY (1) 319076 P

7.0 TECHNICAL SPECIFICATION

SPECIFICATION

■ OVERALL GAIN	MIC 80, 70, 60, 50, 40dB, LINE 10dB
■ MAX. INPUT LEVELS	MIC −37, −27, −17, −7, +3dB, LINE +20dB
■ INPUT IMPEDANCE	MIC >2k0, LINE >10K
■ MIC POWER	48v PHANTOM, 12v TONADER
■ FREQUENCY RESPONSE	+0, −1dB 20Hz to 20kHz
■ HI PASS FILTER	−3dB AT 90Hz & 150Hz AT 12dB/OCTAVE
■ HARMONIC DISTORTION	<0.03% AT 1kHz 600R LOAD, 0dB OUTPUT, <0.5% 80Hz TO 20kHz + 15dB OUTPUT
■ CROSSTALK	INTERCHANNEL <70dB 40Hz - 15 kHz, GROUP <60dB 40Hz TO 15kHz
■ MAXIMUM OUTPUT LEVEL	+24dBm
■ OUTPUT LIMITER	THRESHOLD PPM6/+8dB ATTACK TIME CONSTANTS 300uS or 2mS RECOVERY TIME CONSTANTS 50mS or 500mS
■ OUTPUT ATTENUATION	50dB
■ OUTPUT IMPEDANCE	<80R TRANSFORMER BALANCE
■ NOISE	−127dB MIC 20Hz TO 20kHz, 200R SOURCE
■ MONITORING	TYPE 'A' JACK INTO LOW IMPEDANCE PHONES WITH LEVEL CONTROL, MINI JACK INTO HIGH IMPEDANCE PHONES, BBC PPM, NORDIC N10 OR VU METERS
■ POWERING	EXTERNAL 10-15v D.C. ON 4 PIN XLR, INTERNAL 9 C SIZE NICADS OR DRYCELLS
■ CURRENT CONSUMPTION	150mA AT 12v WITHOUT POWERED MICS
■ DIMENSIONS	290 × 170 × 58mm
■ WEIGHT	2.5Kg - EXCLUDING BATTERIES

THE COPYRIGHT OF THIS DRAWING IS OWNED BY AUDIO DEVELOPMENTS LTD AND ANY REPRODUCTION OF THIS DRAWING IN WHOLE OR PART WITHOUT THEIR WRITTEN AUTHORITY IS FORBIDDEN © 1994

ISS.	REVISION/DATE	SIG.
1	FIRST DIF 301 10.1.94	jgm

DRAWN jgm

CHECKED/APP'D. MK

SCALE N/A

P.C.B. No. N/A

TITLE: SPECIFICATION

Audio Developments Ltd.
Hall Lane, Walsall Wood, Walsall.
West Midlands, WS9 9AU. England
Tel. Brownhills (0543) 375351

PART No. N/A

DRG. No AD. 261 .D. 001 SHT. 1 OF 1

MY 11 319076 P