Serial no.

_____

AD 260
ENG MIXER

HANDBOOK

Manufactured by
Audio Developments Ltd
23 Portland Road, Aldridge,
Walsall, West Midlands,
WS9 8NS England
Tel: 44 (0)1922 457007
Fax: 44 (0)1922 457008
email: sales@audio.co.uk

CONTENTS

	Page Number
Introduction	1
Operating notes	2
Operational notes . . .	7
Calibration notes . . .	8
Connections	10
Do's and Don'ts	11
Drawing list	12

AD260 STEREO ENG MIXER

INTRODUCTION

The AD260 has been introduced to Audio Developments' range to complement the highly successful AD160 Mono Mixer.

We have endeavoured to carry on the philosophy of keeping the overall size as small as practically possible, while keeping it operationally easy by putting all the major controls on the top panel.

The descriptive part of the manual has been kept as brief as possible and laid out in a form that allows the operator to refer to a particular section. It is usually not essential for a user to read all sections but it is recommended that the 'Block Diagram' and the 'Connection Details' pages are referred to.

We wish you many happy and trouble-free hours of use from your Mixer.

OPERATING NOTES

INPUTS: The mixer is equipped with 4 inputs on XLR connectors that can be selected as either microphone or line input. The input connectors along with the microphone power switches are mounted on the side panel. The input stage incorporates the gain selector, which is mounted on the top panel. The selector is a 4 position switch 3 positions designated to microphone sensitivity and the fourth is a line position The markings around the selector refer to the maximum gain available in the signal path. For example, if the selector is set to the 60 position with the channel and master gain controls fully in their clockwise position ('0' i.e. zero attenuation) then the overall gain of the specified channel is 60dBm.

The gain control associated with each input determines the level sent from each channel to the main mix.

MIC POWERING: The mixer incorporates two types of microphone powering. Mounted below each input connector is the three position selector switch and this is of the toggle type. In the PH position this selects the PHANTOM microphone powering and is 48V in magnitude. In the TA position the TONADOR or AB microphone powering is selected. This is a 12V system. In practice the majority of condenser microphones use the phantom system of powering. However, some work on a lower operating voltage than 48V and care should be taken to ensure that the microphone can also be used at 48V. Many microphones will work over a wide range of voltage but this cannot be taken as a general rule.

The Tonader type powering is used by many microphones in the Sennheiser range.

MAIN OUTPUTS: The two main outputs come out on male XLR connectors on the opposite side panel to the inputs. They aretransformer balanced and floating and the level is controlled by the master gain control which is a dual concentric potentiometer. The upper control knob affects the left output, the lower the right output.

A 60dB attenuator is incorporated in each output to allow microphone level to be sent from the mixer. This facility is selected using the toggle switch mounted under each output connector - 'Hi selects the normal line level output and 'Lo' selects the microphone level.

The attenuator is mounted directly on the output so that there is no degradation in the signal to noise ratio.

ROUTING: This function is achieved by one of two methods. Either by a pan potentiometer or a switch and in both cases they are mounted on the side panel containing the output connectors. The pan control allows the operator to send any combination of levels to A and B outputs, whereas the routing switch allows signal to be fed to either A or B or an equal amount to both outputs. Thus the three positions are signal to A only, B only or A and B.

HI PASS FILTER: Each channel contains a H.P.F. with two turnover frequencies selectable on a toggle switch.

This function allows the operator to remove any undesirable low frequencies such as wind noise. The filter is placed right at the beginning of the signal path pre the input transformer. This means that any unwanted

low frequencies are removed before they can enter any gain elements that may become overloaded, if such as the wind noise is of a high signal level.

LIMITER: A 20:1 ratio limiter is incorporated in each output amplifier and it acts on the final stage, thus governing the level sent to line. The threshold is factory preset to+8dBm but this can be adjusted by the customer if so desired. (Refer to calibration notes).

The Limiter is brought into the signal path via a three position switch marked LIM - OFF - LINK. Obviously the OFF position takes the limiters out of action. In the LIM position the limiters come into operation but act on each output amplier independent of each other. In the LINK position the limiters are in stereo operation mode. This allows the stereo image to be maintained because even when the levels on A and B output are different to such a degree that only one limiter would be acting, the other output still has its gain reduced by the same amount by the link action. Next to the B meter are yellow and green LED marked A and B respectively. These indicate when gain reduction is taking place. The ideal operating point is when these LED are 'winking' rather than illuminated continuously. This will allow the maximum dynamic range to be maintained.

LINE-UP TONE: The button marked '1KHz INJECT' introduces a 1KHz tone into both outputs. The tone is injected pre the master gain controls and the main signal path is broken. Therefore the level sent to line can be controlled by the master gain pots up to a maximum of +10dBm.

MONITORING: The audible monitor signal comes out on a stereo jack socket either a Type A or Type B. The level is controlled via a ganged

potentiometer, which is screwdriver adjusted.

Two signals can be monitored, either the direct signal from the mixer output or an auxiliary input. Which signal is monitored is selected by the push button marked DIR-TAPE. DIR connects to the mixer output, TAPE to the auxiliary return, which can be used for such as monitoring off a tape machine. The return level is adjusted by a screwdriver-operated potentiometer, mounted on the side panel alongside the stereo jack socket, where the signal is brought in.

Metering is via two PPM's, either BBC or N10, or VU's. The signal read is influenced by the DIR-TAPE switch, thus what appears on the audible monitor also comes up on the meters. The right-hand meter can also indicate battery status by depression of a momentary push switch on the side panel containing the input connectors. The batteries are considered usable if, on the BBC PPM the needle is in the green zone, on an N10 above the TEST mark and on a VU in the red zone above zero VU. The mixer is still usable outside the zones specified, but it is advised that the batteries are changed at the earliest opportunity.

POWERING: The mixer is capable of being powered from an external d.c.course or internal batteries.

From an external source the power is injected into a 4 pin XLR mounted on the input side panel. Reference to the connection details will show that any regulated d.c.source of a voltage range 10 to 24V and capable of supplying 250mA is sufficient to feed the mixer. Care must be taken when choosing which pin of the XLR to drive. This depends on the voltage available i.e. 10 to 15V is supplied to PIN 4 and 15 to 24V is supplied to PIN 3.

Also built into the mixer is a constant use when NI-CAD batteries are fitted. A voltage supply of at least 18V is required to the charge circuit. The charge current is between 50 and 60mA.

Powering from batteries requires 12 cells of the AA size. NI-CAD or dry cells can be used and the battery box is incorporated inside the bottom extrusion. Access is by removal of the cover, which is retained by a quarter turn fastener. The direction in which the cells should be fitted is shown inside the battery box.

OPERATIONAL NOTES

1. It is suggested that all controls and switches are checked for their position before plugging up power and audio connectors.

   This is particularly important with regard to the microphone power switches as feeding d.c. voltage into some microphones may cause them damage.

2. It is recommended that the signal path is operated with some gain left in hand on the input and output potentiometers. For best signal to noise ratio the controls should be operated betweeen 5 and 10dB down.

3. Microphone powering - when using dynamic microphones the power switch should be set to the '0' position. The switch should not be left in the TA (Tonader or AB) position unless a microphone needing that type of powering is plugged up. This also applies when nothing is inserted into a particular input as a form of crosstalk across inputs can occur. This is due to the TA type powering being an unbalanced type.

4. When using the LIMITER it should be operated so that the gain reduction LED's are flashing rather than continuously indicating. This will help preserve the signals dynamic range and use the limiter for what it was intended, as a safety from overload device.
   The LINK position should only be used when wishing to maintain a stereo image or similar applications.

CALIBRATION NOTES

Access to all calibration controls can be achieved by removal of the side covers of the mixer.

TONE GENERATOR: The factory set level is +10dBm to the line output. The pre-set to adjust the level is VR5 on the Monitor Board (Refer to Drg.No.AD260.C.104 & C.304)

LIMITER: The LIMITERS are mounted on the LIMITER and OUTPUT BOARD.

There are two pre-set controls per Limiter. One adjusts the threshold, the other is a set 0 control. Normally it will not be necessary to adjust the latter unless some maintenance has taken place in the circuit.

Adjustment of the THRESHOLD can be carried out as follows:-

With the LIMITER SWITCH in the OFF position feed into the outputs a steady tone of approximately 2dB higher in level than the desired Threshold setting. Then switch the LIMITER SWITCH TO LIM(not LINK) and adjust VR2 for the LEFT and VR4 for the RIGHT until the required Threshold level is achieved.

If for any reason the SET 0 has to be recalibrated, the procedure is as follows:-

Set the THRESHOLD controls to the centre of their rotational movement. With the LIMITER switch to OFF feed a steady tone of 0dBm to the outputs. Switch the Limiters to LIM and adjust pre-sents VR3 for the LEFT and VR5 for the RIGHT until the signal has fallen by 0.2dB. Care should be taken in this setting because there are two points on the pre-set's travel that will achieve the above. The correct position is when approximately -2V d.c. appears on the respective pre-set's wiper with respect to 0V. After this calibration has been carried out theabove procedure for setting the Threshold is followed.

P.P.M. The meter driver has three calibration controls, one for SET LEVEL and the other two for SET LAW. Firstly set all three pre-sets to their central rotational position. Then with 0dBm fed to the output, adjust VR1 until the zero calibration mark is achieved on the P.P.M. The LAW associated with the upper and lower sections of the scale can then be adjusted using VR2 and VR3. VR2 is for calibrating above the zero mark and VR3 for the section of scale below zero. Setting the LAW is best carried out as follows:-

(I) **BBC P.P.M.**

(a) with 0dBm at output adjust VR1 to give a reading of MARK 4;
(b) Increase output to +8dBm and adjust VR2 until meter reads MARK 6;
(c) Repeat (a) and (b) until readings are correct;
(d) Lower output level to -8dBm and adjust VR3 until the meter reads MARK 2;
(e) Repeat (a) and (d) until readings are correct;
(f) Check calibration of all marks and adjust if necessary the respective pre-set associated with the error. DRG.No.AD160.C.21 and D.22).

(II) **N10 P.P.M.**

The procedure for this scale is identical to the above, except that the output levels are set to match the appropriate scale markings, i.e. TEST is calibrated using VR1 then levels of +6dB for the upper scale region and -12dB for the lower scale are used to calibrate the LAW.

(III) **VU**

There is only one adjustment on the VU board and that is the level pre-set VR1. The output level is adjusted to +4dBm and VR1 is set to give zero VU. DRG.No.AD160 D23 & D24.

AD260 CONNECTIONS

AUDIO INPUTS:

XLR (3 Pin Female)
1 - EARTH
2 - LIVE
3 - RETURN

PHANTOM POWERING
1 - EARTH
2 - +48v
3 - +48v

TA or AB
1 - EARTH
2 - +12v
3 - Ov

TAPE RETURN - Type A Jack .
TIP - Lefthand
RING - Righthand
SLEEVE - EARTH

AUDIO OUTPUT:

XLR (3 Pin Male)
1 - EARTH
2 - LIVE
3 - RETURN

Transformer balanced

MONITOR JACK:

Type 'A'
TIP - SIGNAL - LEFT
RING - SIGNAL - RIGHT
SLEEVE - EARTH

POWER UNIT:

1 - Ov
2 - CHARGER
3 - 15-28v
4 - 10-15v

The voltage source must be of a D.C. regulated type and capable of supplying 250mA.

The CHARGE input requires a regulated voltage of at least 15v with a maximum of 28v. i.e. connect Pin 2 to Pin 4. The constant current charger circuit is built in the mixer.

SOME POINTS TO CONSIDER BEFORE USING AD260 MIXER

* Ensure correct microphone power is selected before inserting microphones

* Ensure that microphone power is switched off when inputs are unterminated. If microphone power is on when the input is unterminated it will result in greatly increased inter-channel crosstalk when switched to TA.

* When using AD100-05 Power Supply and Charger Unit with batteries only allow charge switch to operate when using Nickel Cadmium batteries.

* When using AD100-05 Power Supply ensure the mixer power switch is to "ext". The mixer will still operate when switched to "Int" but its performance will be impaired.

* On the AD100-05 Power Supply there is a mains voltage selector. Ensure this is in the correct position for the intended mains voltage.

* The AD260 in its standard form has a microphone powering facility when switched to TA +12v hot 0v cold. The procedure for reversing the microphone power is explained on page

* Do not store the mixer with batteries for long periods. This will result in battery leakage.

* Remove batteries when transporting. Often mixers can accidentally be switched on whilst packing is taking place.

* To clean mixer, do not use solvent cleaners. This may result in the silk screen lifting and/or plastic components suffering. It is best to use a damp cloth and mild detergent. For the paintwork use household furniture polish.

DRAWING LIST

DRAWING TITLE	DRAWING TITLE
BLOCK DIAGRAM	AD.260.C.110 Sheet 1
MOTHER BOARD	
Circuit Diagram	AD.260.C.107 Sheet 1
Component Location Drawing	AD.260.C.307 Sheet 1
Component Cross Reference list	AD.260.C.307 Sheets 3 & 4
INPUT MODULE (Mic/Line)	
Circuit Diagram	AD.260.C.102 Sheet 1
Component Location Drawing	AD.260.C.302 Sheet 1
Component Cross Reference List	AD.260.D.302 Sheet 3
INPUT MODULE (Mic/Line Master & Slave)	
Circuit Diagram	AD.260.C.108 Sheet 1
Component Location Drawing (Master)	AD.260.C.308 Sheet 1
Component Cross Reference List(Master)	AD.260.C.308 Sheet 3
Component Location Drawing (Slave)	AD.260.C.308 Sheet 4
Component Cross Reference list(Slave)	AD.260.C.308 Sheet 6
OUTPUT MODULE	
Circuit Diagram	AD.260.C.103 Sheet 1
Component Location Drawing	AD.260.C.303 Sheet 1
Component Cross Reference List	AD.260.D.303 Sheets 3 & 4
ROUTING/MONITOR MODULE	
PANNING OPTION	
Circuit Diagram	AD.260.C.109 Sheet 1
Component Location Drawing	AD.260.C.309 Sheet 1
Component Cross Reference List	AD.260.D.309 Sheet 3 & 4
SWITCHING OPTION	
Circuit Diagram	AD.260.C.109 Sheet 3
Component Location Drawing	AD.260.C.309 Sheet 5
Component Cross Reference List	AD.260.D.309 Sheet 7
L.E.D. DRIVER	
Circuit Diagram	AD.260.D.101 Sheet 3
Component Location Drawing	AD.260.D.301 Sheet 5
Component Cross Reference List	AD.260.D.301 Sheet 7
P.P.M. (B.B.C. & N.10)	
Circuit Diagram	AD.043.C.103 Sheet 1
Component Location Drawing	AD.043.D.303 Sheet 1
Component Cross Reference List -BBC	AD.043.D.303 Sheet
Component Cross Reference List -N10	AD.043.D.303 Sheet 5
V.U.	
Circuit Diagram	AD.043.D.104 Sheet 1
Component Location Drawing	AD.043.D.304 Sheet 1
Component Cross Reference List	AD.043.D.304 Sheet 3
CONVERTER	
Circuit Diagram	AD.100.C.67 Sheet 1
Component Location Drawing	AD.100.D.68 Sheet 1
Component Cross Reference List	AD.100.D.68 Sheet 3
P.S.U.	
Connection Instructions	AD.100-07.D.05 Sheet 3

DRG. No. SHEET 1 OF 2
AD.260.C.110

THIRD ANGLE PROJECTION

DO NOT SCALE

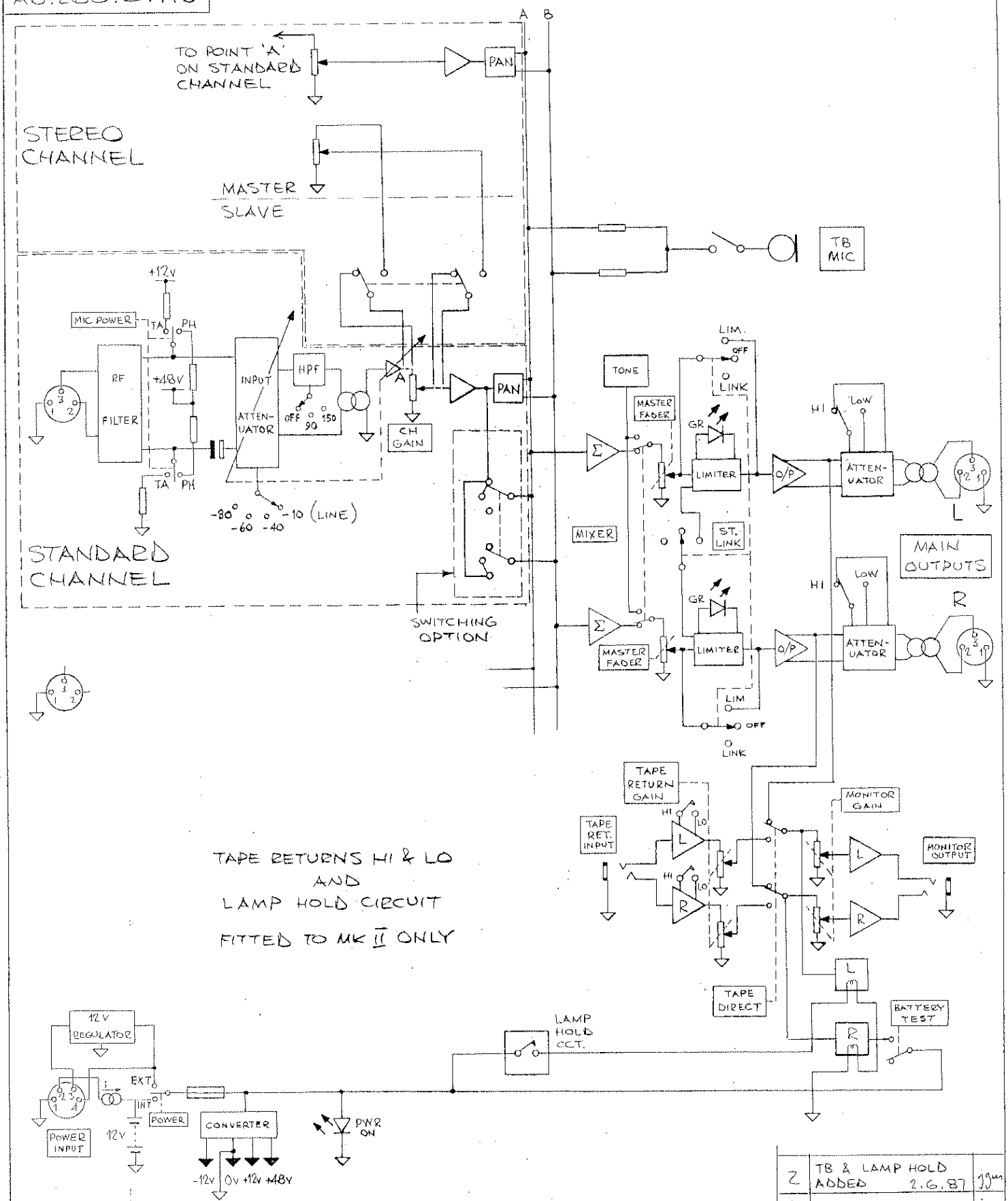

TAPE RETURNS HI & LO
AND
LAMP HOLD CIRCUIT
FITTED TO MK II ONLY

ISS	DESCRIPTION	SIG.
2	TB & LAMP HOLD ADDED 2.6.87	jgm
1	FIRST 4.2.86	jgm

Drawn jgm 4.2.86	Scale —	Unstated Tolerances	(MK I & II) BLOCK DIAGRAM (MANUAL)
Checked	Material	2 Dec. Pl. ±.01in 3 Dec. Pl. ±.005 Fractions ±1/64 Metric ±.2mm	
Approved	Finish		

Audio Developments Ltd.,
Hall Lane,
Walsall Wood, Staffs.

DRG. No. SHEET 1 OF 2
AD.260.C.110

DRG. No. SHEET 1 OF 2
AD.260.C.107

THIRD ANGLE PROJECTION

DO NOT SCALE

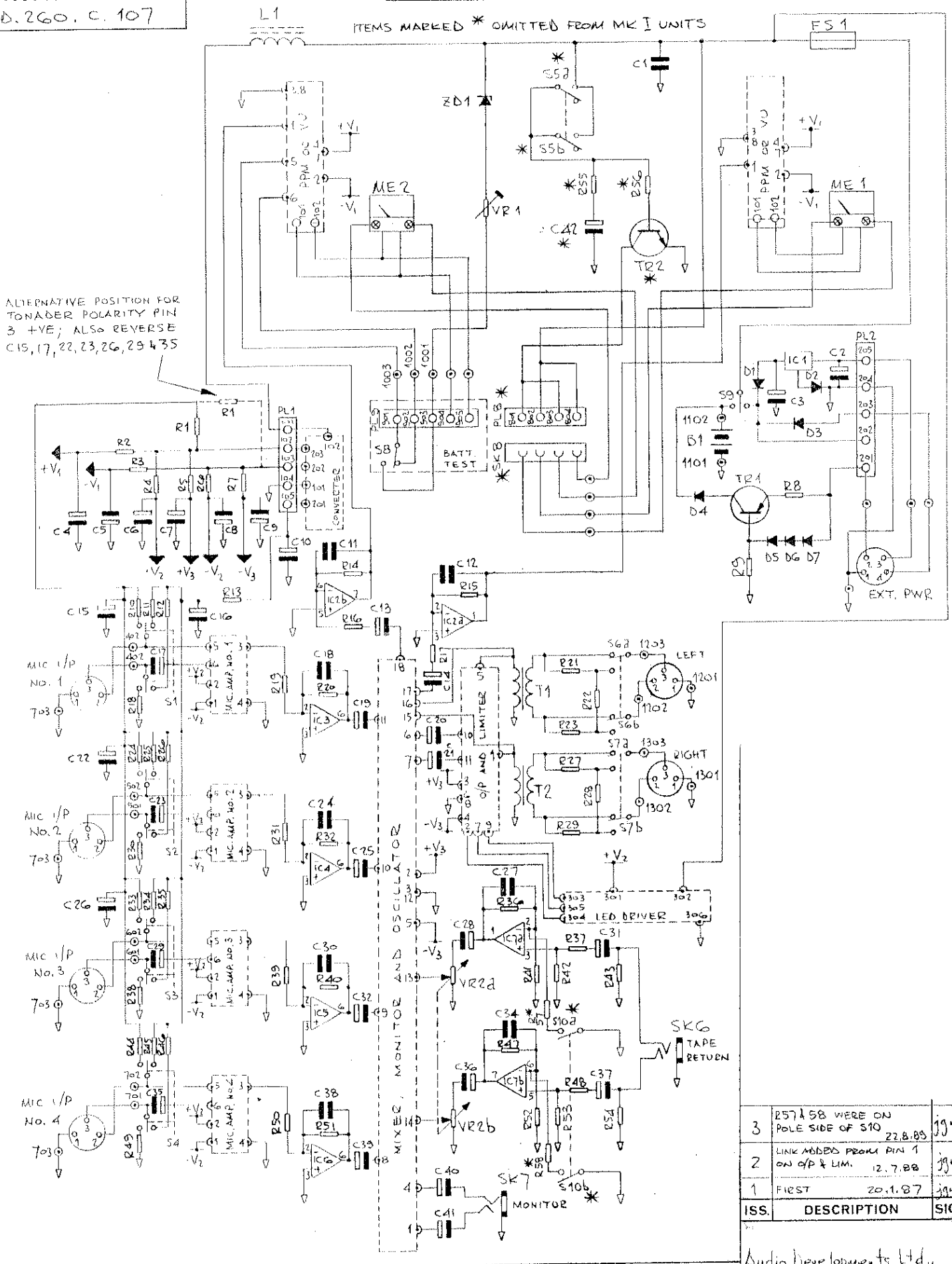

ISS.	DESCRIPTION	SIG.
3	R57&58 WERE ON POLE SIDE OF S10 22.8.88	jgm
2	LINK ADDED FROM PIN 1 ON O/P & LIM. 12.7.88	jgm
1	FIRST 20.1.87	jgm

Drawn 15.1.87 jgm	Scale	Unstated Tolerances	MOTHER BOARD CIRCUIT DIAGRAM (MK I & II)
Checked	Material	2 Dec. Pl. ±.010	
Approved	Finish	3 Dec. Pl. ±.005	
		Fractions ±1/64	
		Metric ±.2mm	

Audio Developments Ltd.,
Hall Lane,
Walsall Wood, Staffs.

DRG. No. SHEET 1 OF 2
AD.260.C.107

(TAKEN FROM AD.260.C.101) MY 29096 R

DRG. No. SHEET 1 OF 4
AD.260.C.307

THIRD ANGLE PROJECTION

DO NOT SCALE

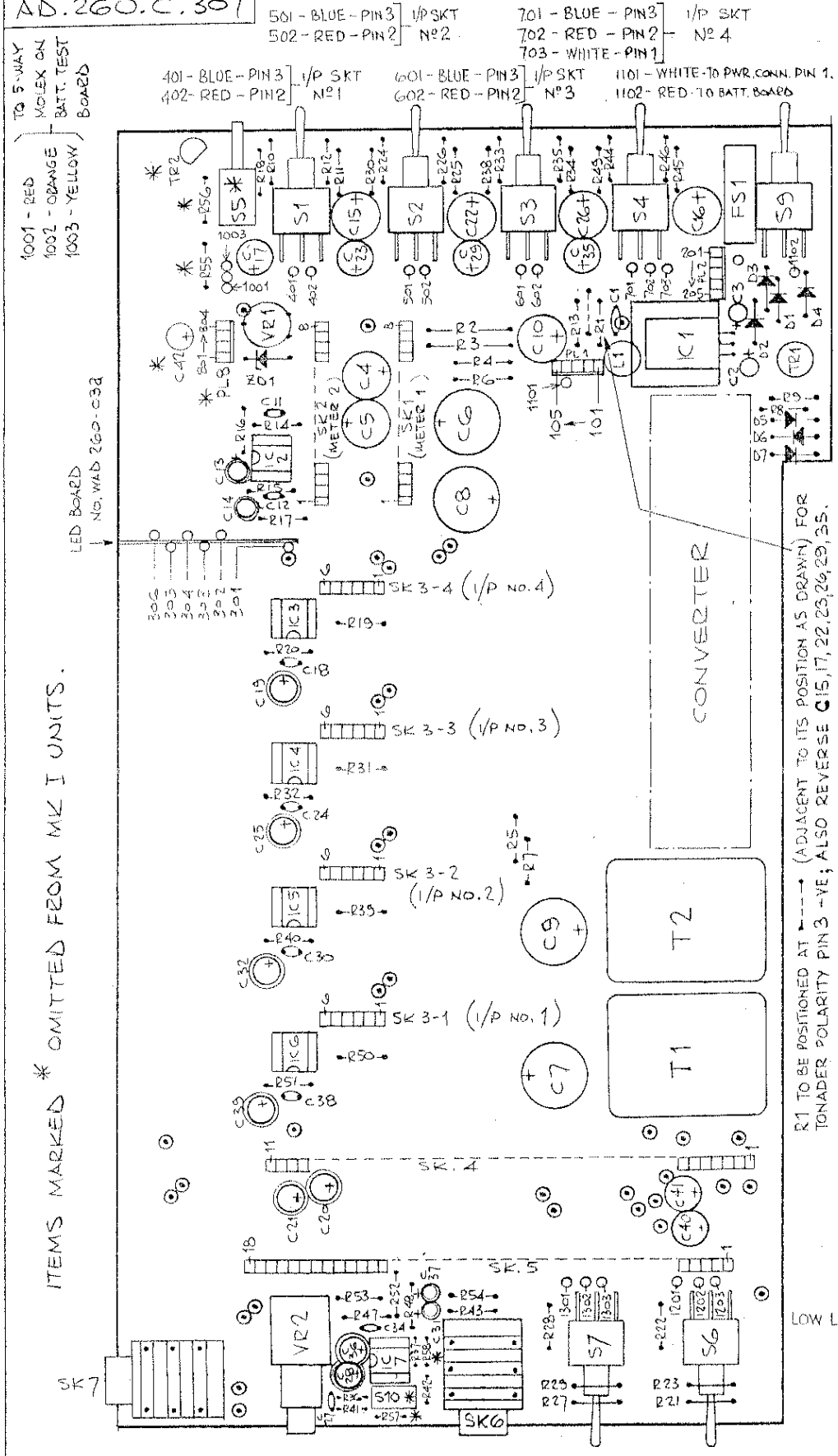

GOLD EDGE CONNECTORS

SOCKET NUMBER	PIN Nº	PIN DESCRIPTION	BOARD DESCRIPTION
SK1 & SK2	1	INPUT	PPM/VU DRIVER
	2	-12v	
	3	0v	
	4	+12v	
	5	] - BATT TEST	
	6		
	7	+12v	
	8	0v	
SK3 -1 -2 -3 -4	1	-12v	INPUTS 1,2,3 & 4
	2	+12v	
	3	OUTPUT	
	4	0v	
	5	] I/P AMP.	
	6		
SK4	1	O/P RH	LIMITER & OUTPUT
	2	L.H LIM LED DRIVE	
	3	+12v	
	4	-12v	
	5	LH O/P	
	6	0v	
	7	RH (AS 2)	
	8	0v	
	9	LIMITER LINK	
	10	LH I/P	
	11	RH I/P	
SK5	1	L.H MON O/P	ROUTING & MONITOR
	2	+12v	
	3	0v	
	4	R.H. MON O/P	
	5	-12v	
	6	L.H MIXER O/P	
	7	R.H MIXER O/P	
	8	FROM CH 4	
	9	FROM CH 3	
	10	FROM CH 2	
	11	FROM CH 1	
	12	0v	
	13	L.H. TAPE RET. I/P	
	14	R.H. TAPE RET. I/P	
	15	R.H. DIRECT	
	16	L.H. DIRECT	
	17	TO L.H. METER	
	18	TO R.H. METER	

MOLEX SOCKET WIRE COLOURS

TO CONVERTER :-
101 - ORANGE
102 - RED
103 - BLUE
104 -
105 - YELLOW

EXT. PWR. SOCKET :-
201 - PURPLE
202 -
203 - PINK
204 - WHITE
205 - ORANGE

801 - BLACK
802 - RED } TO METER 2
803 - BLACK
804 - RED } TO METER 1

1301 - SCREEN - PIN 1
1302 - RED - PIN 2
1303 - BLUE - PIN 3
LINE I/P SOCKET 'B'

1201 - SCREEN - PIN 1
1202 - RED - PIN 2
1203 - BLUE - PIN 3
LINE I/P SOCKET 'A'

ISS	DESCRIPTION	SIG.
2	MOLEX PIN NO. 104 WIRE COLOUR WAS WHITE. POSITION & PURPOSE CHANGED OF HOLE NO. 1101. 18.9.89	jgm
1	FIRST 20.1.87	jgm

PCB No	Drawn 19.1.87 jgm	Scale 1:1	Unstated Tolerances	(MK I & II) MOTHER BOARD COMPONENT LOCATION
WAD.260-03	Checked	Material	2 Dec. Pl. ±.010 3 Dec. Pl. ±.005	
	Approved	Finish	Fractions ±1/64 Metric ±2mm	

Audio Developments Ltd.,
Hall Lane,
Walsall Wood, Staffs.

DRG. No. SHEET 1 OF 4
AD.260.C.307

(TAKEN FROM AD.260.C.301) MY 29096 R

AD 260

MOTHER BOARD

COMPONENT CROSS REFERENCE LIST

1. Capacitors

C1	0.1 uF
C2	10 uF 25v
C3	33 uF 16v
C4	100 uF 25v
C5	100 uF 25v
C6	2200 uF 16v
C7	2200 uF 16v
C8	2200 uF 16v
C9	2200 uF 16v
C10	47 uF 63v
C11	10 pF
C12	10 pF
C13	1.0 uF 25v low leak can
C14	1.0 uF 25v low leak can
C15	330 uF 16v
C16	47 uF 63v
C17	100 uF 25v
C18	10 pF
C19	10 uF 16v low leak can
C20	10 uF 16v low leak can
C21	10 uF 16v low leak can
C22	330 uF 16v
C23	100 uF 25v
C24	10 pF
C25	10 uF 16v low leak can
C26	330 uF 16v
C27	22 pF
C28	10 uF 16v low leak can
C29	100 uF 25v
C30	10 pF
C31	1.0 uF 25v low leak can
C32	10 uF 16v low leak can
C33	
C34	22 pF
C35	100 uF 25v
C36	10 uF 16v low leak can
C37	1.0 uF 25v low leak can
C38	10 pF
C39	10 uF 16v low leak can
C40	100 uF 25v
C41	100 uF 25v
*C42	470 uF 25v

2. Battery

B1	12 x AA cells

NOTE: Item marked * omitted from Mark I units.

3. Diodes

D1	1N 4001
D2	1N 4001
D3	1N 4001
D4	1N 4148
D5	1N 4148
D6	1N 4148
D7	1N 4148

4. Fuse

FS1	500mA

5. Heat Sinks

IC1	17°C/W
TR1	50°C/W

6. Inductance

L1	220 uH

7. Integrated Circuits

IC1	7812 12v REG
IC2	TL 062
IC3	TL 061
IC4	TL 061
IC5	TL 061
IC6	TL 061
IC7	TL 062

8. Resistors

R1	82R
R2	100R
R3	100R
R4	39R
R5	22R
R6	39R
R7	22R
R8	30R
R9	2K2
R10	180R

AD 260

MOTHER BOARD

COMPONENT CROSS REFERENCE LIST (continued)

Resistors (continued)

R11	6K8
R12	6K8
R13	100R
R14	100K
R15	100K
R16	100K
R17	100K
R18	180R
R19	68K
R20	100K
R21	11K
R22	22R
R23	11K
R24	180R
R25	6K8
R26	6K8
R27	11K
R28	22R
R29	11K
R30	180R
R31	68K
R32	100K
R33	180R
R34	6K8
R35	6K8
R36	47K - 1/8 watt
R37	100K - 1/8 watt
R38	100R
R39	68K
R40	100K
R41	100K - 1/8 watt
R42	47K - 1/8 watt
R43	10K
R44	180R
R45	6K8
R46	6K8
R47	47K
R48	100K
R49	180R
R50	68K
R51	100K
R52	100K
R53	47K
R54	10K
* R55	1K
* R56	10K
* R57	1K - 1/8 watt
* R58	1K - 1/8 watt

9. Switches

S1	2PCO	on-off-on
S2	2PCO	on-off-on
S3	2PCO	on-off-on
S4	2PCO	on-off-on
*S5	2PCO	moment
S6	2PCO	on-non-on
S7	2PCO	on-non-on
S8	2PCO	moment
S9	2PCO	on-off-on
*S10	2PCO	dil

10. Transformers

T1	ZF 8313	2:1
T2	ZF 8313	2:1

11. Transistor

TR1	BC 461
* TR2	BC 549

12. Variable Resistors

VR1	220K Pre-set
VR2	10K/10K Log

13. Zener Diode

ZD1 BZY 88 C5v6

NOTE: Items marked * omitted from Mark I units.

DRG. No. SHEET 1 OF 2
AD.260.C.102

THIRD ANGLE PROJECTION

DO NOT SCALE

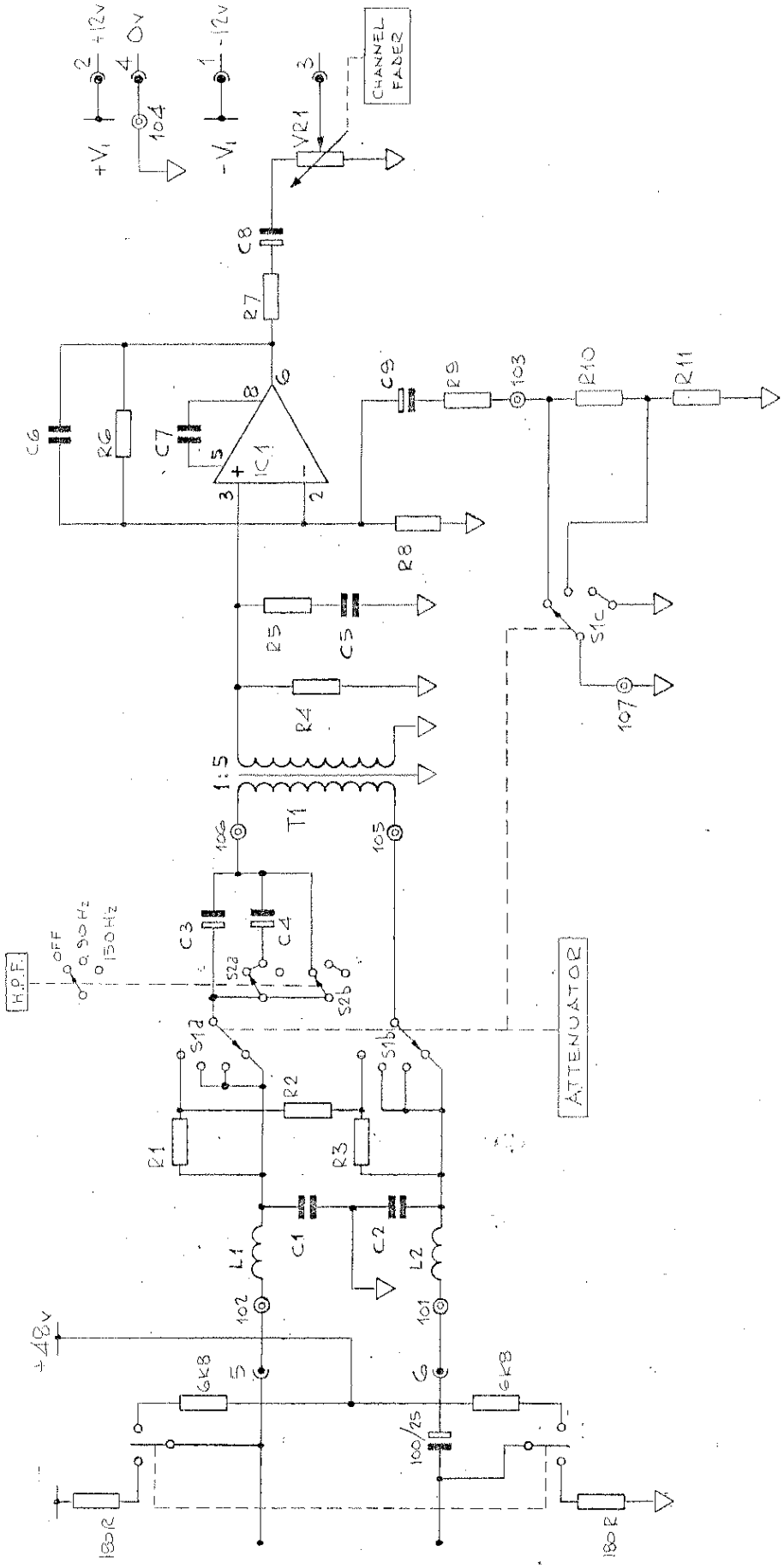

COMPONENTS THIS SIDE OF EDGE CONNECTORS SHOWN ARE ON M/BOARD

ISS	DESCRIPTION	SIG.
3	PIN NOS REVERSED 4.10.85	jgm
2	PIN NOS REVERSED 6.3.86	jgm
1	FIRST 21.1.86	jgm

Drawn jgm 21.1.86	Scale	Unstated Tolerances	MIC/LINE MODULE
Checked	Material	2 Dec. Pl. ±.010 3 Dec. Pl. ±.005	CIRCUIT DRAWING
Approved	Finish	Fractions ±1/64 Metric ±.2mm	

Audio Developments Ltd,
Hall Lane,
Walsall Wood, Staffs.

DRG. No. SHEET 1 OF 2
AD.260.C.102

MAY 29096 R

DRG. No. SHEET 1 OF 3 AD.260.D.302	THIRD ANGLE PROJECTION	DO NOT SCALE

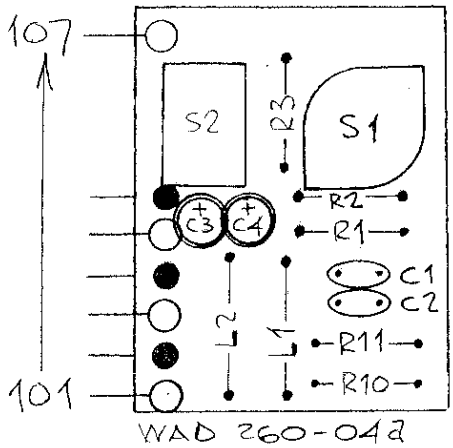

◉ = THRU PINS.

◎ = LOW LEAK CANS.

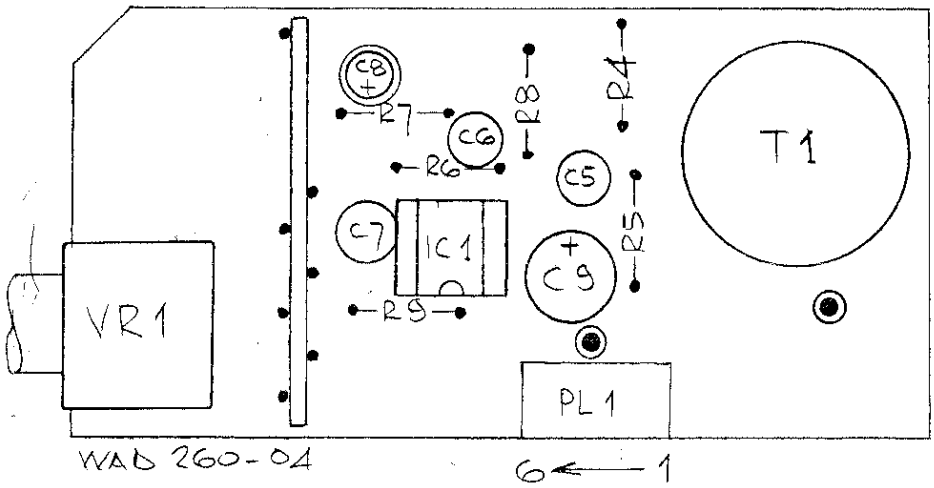

ISS	DESCRIPTION	SIG.
4	FIRST OFFICIAL ISSUE : DIF001 22.1.90	KAG
3	C1, C2, R10, R11 REPOSITIONED 5.10.89	jgm
2	EDGE CONNECTOR NO. SEQUENCE REVERSED 4.3.86.	jgm
1	FIRST 22.1.86	jgm

Drawn jgm 22.1.86	Scale 1.42 : 1	Unstated Tolerances	MIC / LINE MODULE
Checked	Material N/A	2 Dec. Pl. ±·010 3 Dec. Pl. ±·005	COMPONENT LOCATION DRAWING
Approved	Finish N/A	Fractions ± 1/64 Metric ±·2mm	

Audio Developments Ltd.,
Hall Lane,
Walsall Wood, Staffs

DRG. No. SHEET 1 OF 3
AD.260.D.302

MY 26094 R

AD 260

INPUT MODULE (Mic/Line)

COMPONENT CROSS REFERENCE LIST

1. Capacitors

C1	2n2
C2	2n2
C3	0.22 µF 63v low leak can
C4	0.22 µF 63v low leak can
C5	220 pF
C6	220 pF
C7	22 pF
C8	10 µF 25v low leak can
C9	470 µF 16v

2. Inductance

L1	100µH
L2	100µH

3. Integrated Circuit

IC1	NE 5534

4. Resistors

R1	2K4
R2	150R
R3	2K4
R4	100K
R5	10K
R6	11K
R7	100R
R8	100K
R9	100R
R10	1K
R11	100K

5. Switches

S1	3 pole 4 way Rotary
S2	2 pole on-on-on Toggle

6. Transformer

T1	5993	5:1

7. Variable Resistor

VR1	10K Log

DRG. No. SHEET 1 OF 2
AD.260.C.108

THIRD ANGLE PROJECTION

DO NOT SCALE

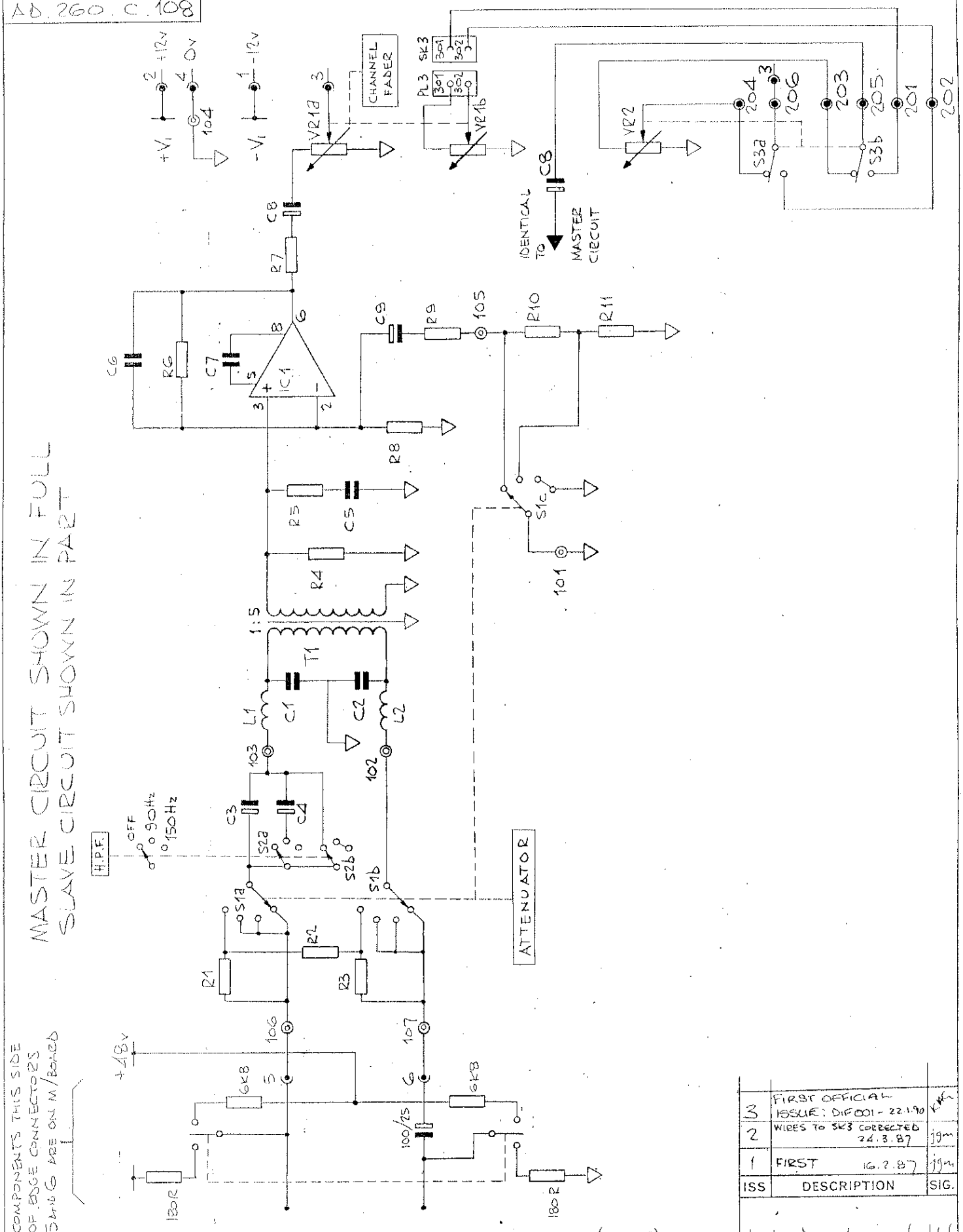

MASTER CIRCUIT SHOWN IN FULL
SLAVE CIRCUIT SHOWN IN PART

COMPONENTS THIS SIDE OF EDGE CONNECTORS 5 & 6 ARE ON M/BOARD

ISS	DESCRIPTION	SIG.
3	FIRST OFFICIAL ISSUE: DIF001 - 22.1.90	PMC
2	WIRES TO SK3 CORRECTED 24.3.87	jgm
1	FIRST 16.2.87	jgm

Drawn jgm 16.2.87	Scale N/A	Unstated Tolerances	(MK II) MIC/LINE MODULE
Checked	Material N/A	2 Dec. Pl. ±.010	
Approved	Finish N/A	3 Dec. Pl. ±.005	CIRCUIT DRAWING
		Fractions ±1/64	
		Metric ±.2mm	

Audio Developments Ltd,
Hall Lane,
Walsall Wood, Staffs.

DRG. No. SHEET 1 OF 2
AD.260.C.108

(TRACED FROM AD.260.C.102) MY 27/09/89

DRG. No.	SHEET 1 OF 6	THIRD ANGLE PROJECTION	DO NOT SCALE
AD.260.D.308			

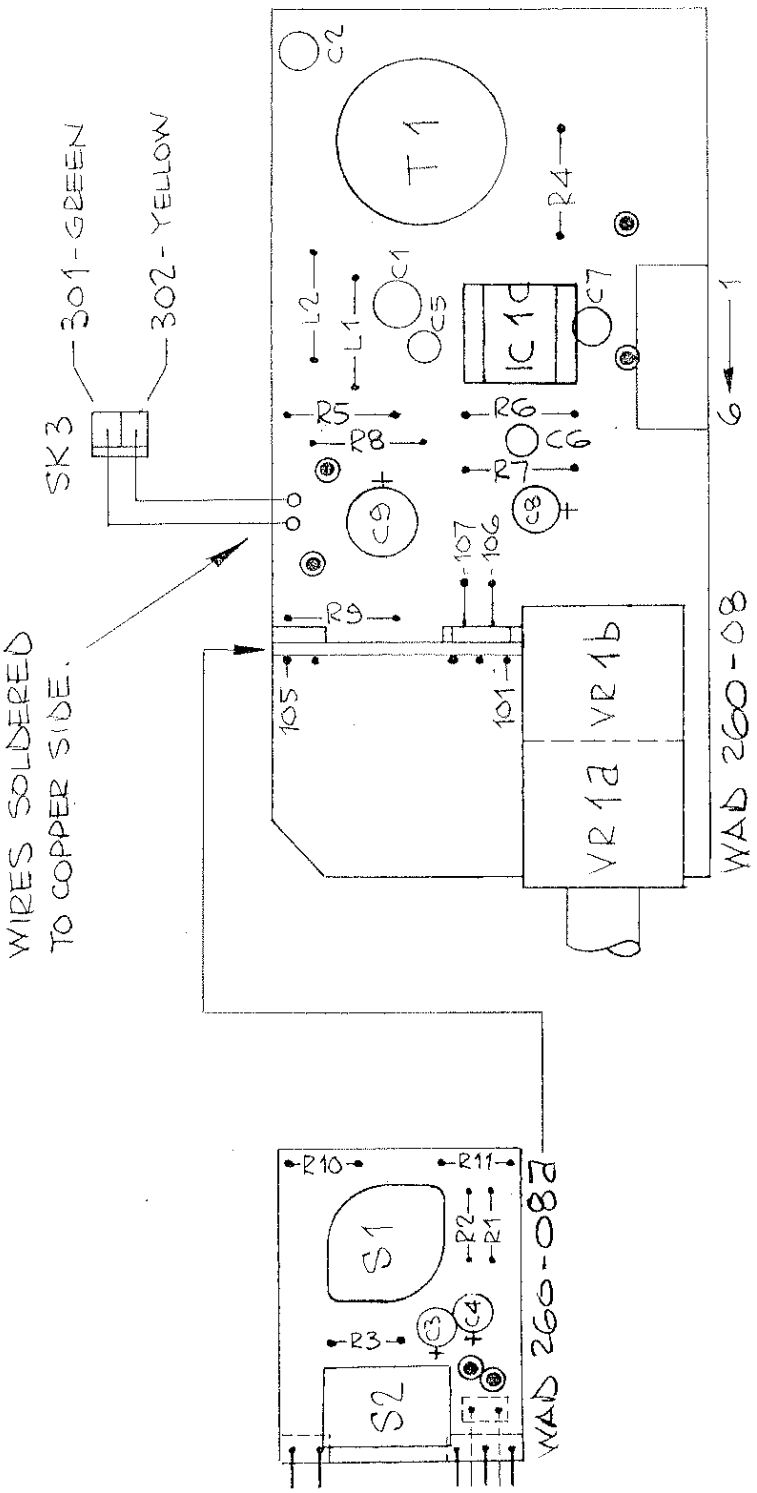

● THRU PINS

ISS	DESCRIPTION	SIG.
5	MOLEX BLOCK WAS SOLDERED TO BOARD DIF 150 1.2.91	jgm
4	FIRST OFFICIAL ISSUE. DIF001 22.1.90	
3	THRU PIN QTY WAS 8	jgm
2	301/302 WIRE COLOURS ADDED 8.1.88	jgm
1	FIRST 16.2.87	jgm

Drawn 16.2.87 jgm	Scale 1.42 : 1	Unstated Tolerances	(MK II) MIC/LINE STEREO LINK DUAL POT COMP. LOCATION DRG.
Checked	Material N/A	2 Dec. Pl. ±·010 3 Dec. Pl. ±·005	
Approved	Finish N/A	Fractions ± 1/64 Metric ±·2mm	

Audio Developments Ltd.,
Hall Lane,
Walsall Wood, Staffs

DRG. No. SHEET 1 OF 6
AD.260.D.308

MY 26094 R

AD 260

INPUT MODULE (Mic/Line Master)

COMPONENT CROSS REFERENCE LIST

1. Capacitors

C1	2n2
C2	2n2
C3	0.22 µF 63v low leak can
C4	0.22 µF 63v low leak can
C5	220 pF
C6	220 pF
C7	22 pF
C8	10 µF 25v low leak can
C9	470 µF 16v

2. Inductance

L1	100 µH
L2	100 µH

3. Integrated Circuit

IC1 NE 5534

4. Resistors

R1	2K4 - 1/8 watt
R2	150R - 1/8 watt
R3	2K4 - 1/8 watt
R4	100K
R5	10K
R6	11K
R7	100R
R8	100K
R9	100R
R10	1K - 1/8 watt
R11	100K - 1/8 watt

5. Switches

S1	3 pole 4 way Rotary
S2	2 pole on-on-on Toggle

6. Transformer

T1 5993 5:1

7. Variable Resistor

VR1 10K/10K Log

DRG. No. SHEET 4 OF 6
AD.260.D.308

THIRD ANGLE PROJECTION

DO NOT SCALE

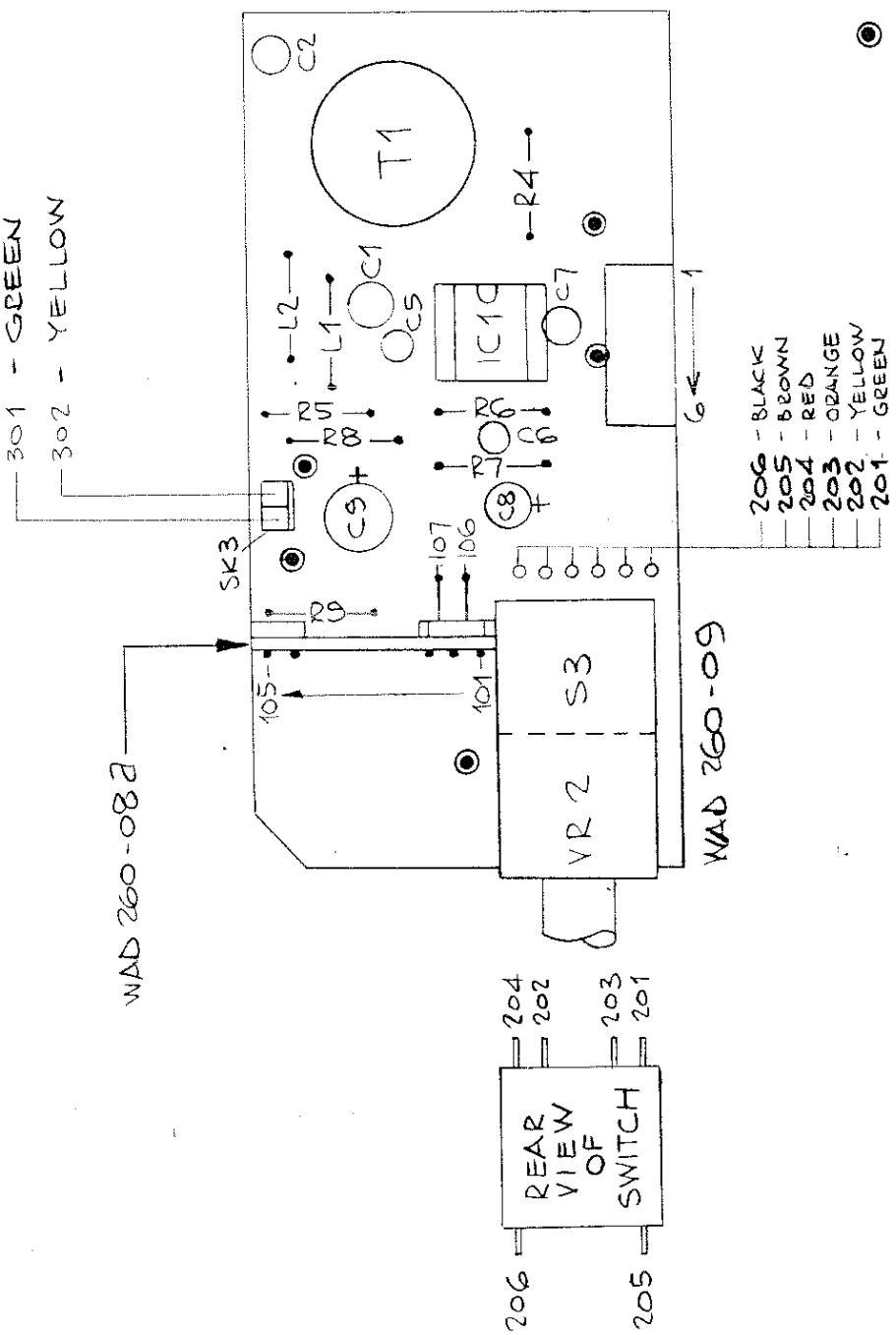

ISS	DESCRIPTION	SIG.
5	THRU PIN QTY WAS 4. 12.9.88	jgm
4	200 SERIES WIRING CORRECTED. 21.1.88	jgm
3	301/302 WIRE COLOURS ADDED 8.1.88	jgm
2	SWITCH WIRING DETAILS ADDED. 24.3.87	jgm
1	FIRST 16.2.87	jgm

Drawn jgm 16.2.87	Scale 1.42 : 1	Unstated Tolerances
Checked	Material	2 Dec.Pl. ±·010
Approved	Finish	3 Dec.Pl. ±·005
		Fractions ± 1/64
		Metric ±·2mm

(MK II)
MIC/LINE STEREO LINK
POT + SW.
COMP. LOCATION DEG.

Audio Developments Ltd.,
Hall Lane,
Walsall Wood, Staffs

DRG. No. SHEET 4 OF 6
AD.260.D.308

MY 26094 R

AD 260

INPUT MODULE (Mic/Line Slave)

COMPONENT CROSS REFERENCE LIST

1. Capacitors

	C1	2n2
	C2	2n2
⊛	C3	
⊛	C4	
	C5	220 pF
	C6	220 pF
	C7	22 pF
	C8	10 µF 25v low leak can
	C9	470 µF 16v

2. Inductance

L1	100µH
L2	100µH

3. Integrated Circuit

IC1 NE 5534

4. Resistors

⊛	R1	
⊛	R2	
⊛	R3	
	R4	100K
	R5	10K
	R6	11K
	R7	100R
	R8	100K
	R9	100R
⊛	R10	
⊛	R11	

5. Switches

⊛	S1	
⊛	S2	
	S3	2 PCO Rotary

6. Transformer

T1	5993	5:1

7. Variable Resistor

⊛	VR1	
	VR2	10K Log

For details of items marked ⊛ see Sheet 3

DRG. No. SHEET 1 OF 2
AD.260.C.103

THIRD ANGLE PROJECTION

DO NOT SCALE

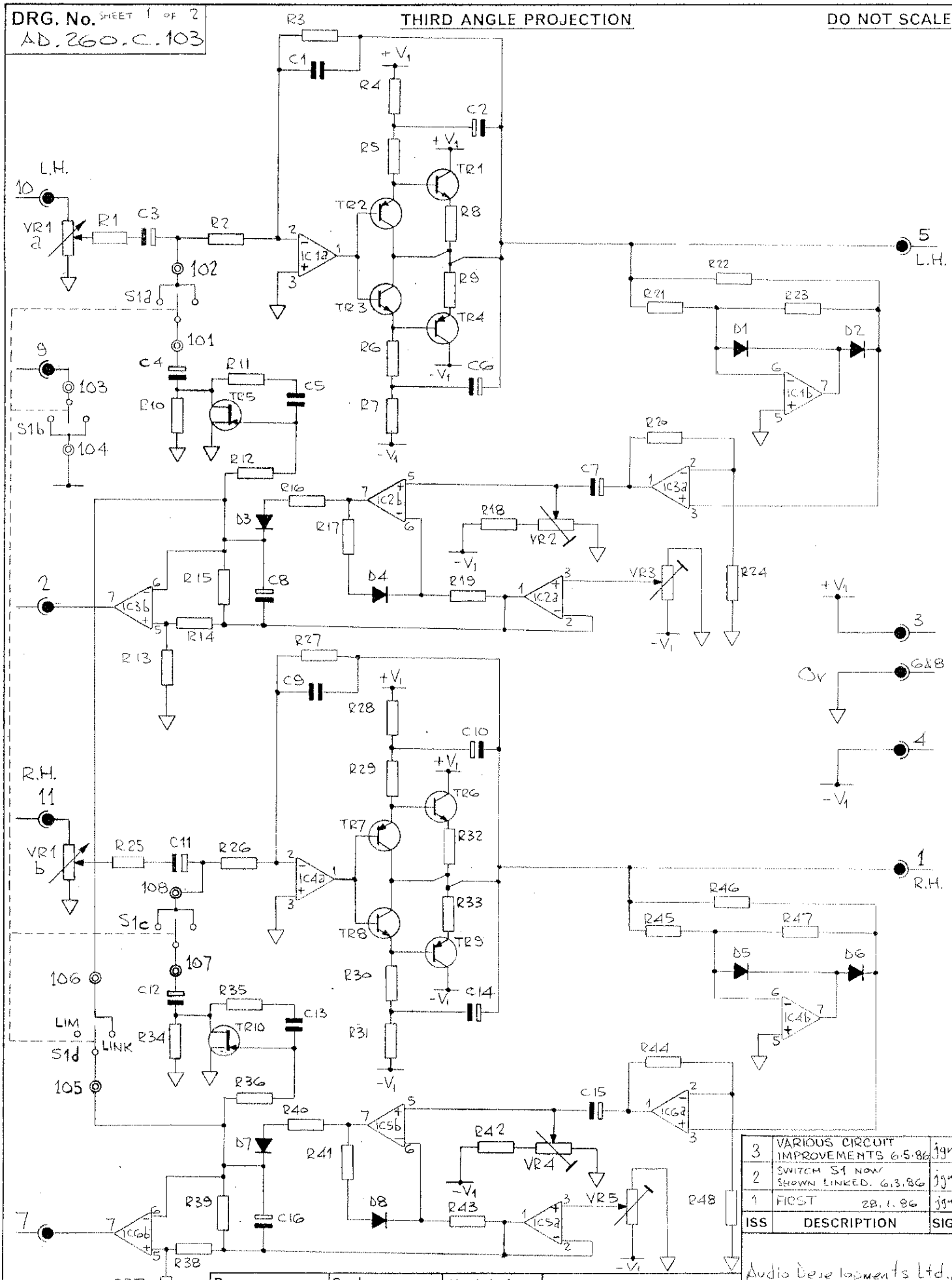

ISS	DESCRIPTION	SIG.
3	VARIOUS CIRCUIT IMPROVEMENTS 6.5.86	jgm
2	SWITCH S1 NOW SHOWN LINKED. 6.3.86	jgm
1	FIRST 28.1.86	jgm

Drawn 28.1.86 jgm	Scale	Unstated Tolerances	LIMITER & OUTPUT CIRCUIT DIAGRAM
Checked	Material	2 Dec. Pl. ±.010 3 Dec. Pl. ±.005 Fractions ±1/64 Metric ±.2mm	
Approved	Finish		

Audio Developments Ltd.,
Hall Lane,
Walsall Wood, Staffs.

DRG. No. SHEET 1 OF 2
AD.260.C.103

MY 29096 R

DRG. No. SHEET 1 OF 4
AD.260.C.303

THIRD ANGLE PROJECTION

DO NOT SCALE

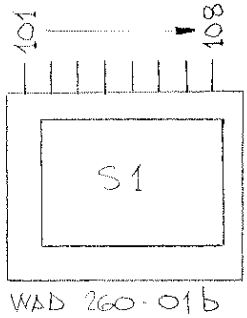

WAD 260-01b

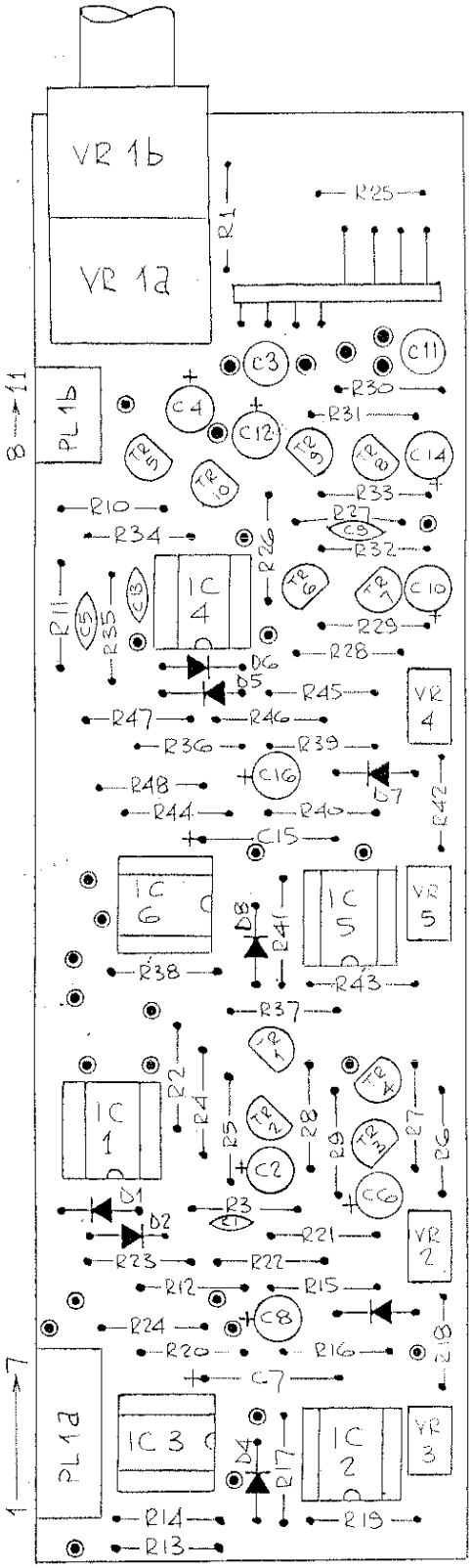

WAD 260-01

◉ = THRU PINS (QTY = 26)

ALL ELECTROLYTIC CAPACITORS HAVE LOW LEAK CANS EXCEPT C7 & C 15.

ISS	DESCRIPTION	SIG.
4	VR5 WAS VR6 VR4 WAS VR5 12.6.86	jgm
3	NOTE ADDED.	jgm
2	THRU-PINS AND COMPONENTS MOVED. 6.5.86	jgm
1	FIRST 28.1.86	jgm

PCB No. WAD 260-01	Drawn 28.1.86 jgm	Scale	Unstated Tolerances: 2 Dec. Pl. ±.010; 3 Dec. Pl. ±.005; Fractions ±1/64; Metric ±.2mm
	Checked	Material	LIMITER & OUTPUT COMPONENT LOCATION
	Approved	Finish	

Audio Developments Ltd.,
Hall Lane,
Walsall Wood, Staffs.

DRG. No. SHEET 1 OF 4
AD.260.C.303

MY 29096 X

AD 260

OUTPUT MODULE

COMPONENT CROSS REFERENCE LIST

1. Capacitors

C1	10 pF
C2	10 µF 25v low leak can
C3	1.0 µF 16v low leak can
C4	47 µF 16v low leak can
C5	2n2
C6	10 µF 25v low leak can
C7	1.0 µF 16v
C8	4.7 µF 50v low leak can
C9	10 pF
C10	10 µF 25v low leak can
C11	1.0 µF 16v low leak can
C12	47 µF 16v low leak can
C13	2n2
C14	10 µF 25v low leak can
C15	1.0 µF 16v
C16	4.7 µF 50v low leak can

2. Diodes

D1	AAY 30
D2	AAY 30
D3	1N 4148
D4	1N 4148
D5	AAY 30
D6	AAY 30
D7	1N 4148
D8	1N 4148

3. Integrated Circuits

IC1	TL 062
IC2	TL 062
IC3	TL 062
IC4	TL 062
IC5	TL 062
IC6	TL 062

4. Resistors

R1	100K
R2	2K2
R3	300K
R4	10K
R5	10K
R6	10K
R7	10K
R8	10R
R9	10R
R10	1M
R11	100K
R12	100K
R13	1M
R14	47K
R15	120K
R16	10K
R17	100K
R18	120K
R19	10K
R20	100K
R21	20K
R22	10K
R23	10K
R24	100K
R25	100K
R26	2K2
R27	300K
R28	10K
R29	10K
R30	10K
R31	10K
R32	10R
R33	10R
R34	1M
R35	100K
R36	100K
R37	1M
R38	47K
R39	120K
R40	10K
R41	100K
R42	120K
R43	10K
R44	100K
R45	20K
R46	10K
R47	10K
R48	100K

AD 260

OUTPUT MODULE

COMPONENT CROSS REFERENCE LIST (continued)

5. Transistors

TR1	BC 549
TR2	BC 559
TR3	BC 559
TR4	BC 549
TR5	2N 5457
TR6	BC 549
TR7	BC 559
TR8	BC 549
TR9	BC 559
TR10	2N 5457

6. Variable Resistors

VR1	10K/10K Log Concentric
VR2	100K Pre-set
VR3	100K Pre-set
VR4	100K Pre-set
VR5	100K Pre-set

DRG. No. SHEET 1 OF 4
AD.260.C.109

THIRD ANGLE PROJECTION

DO NOT SCALE

NOTE:
ITEMS MARKED * OMITTED FROM MK I UNITS.

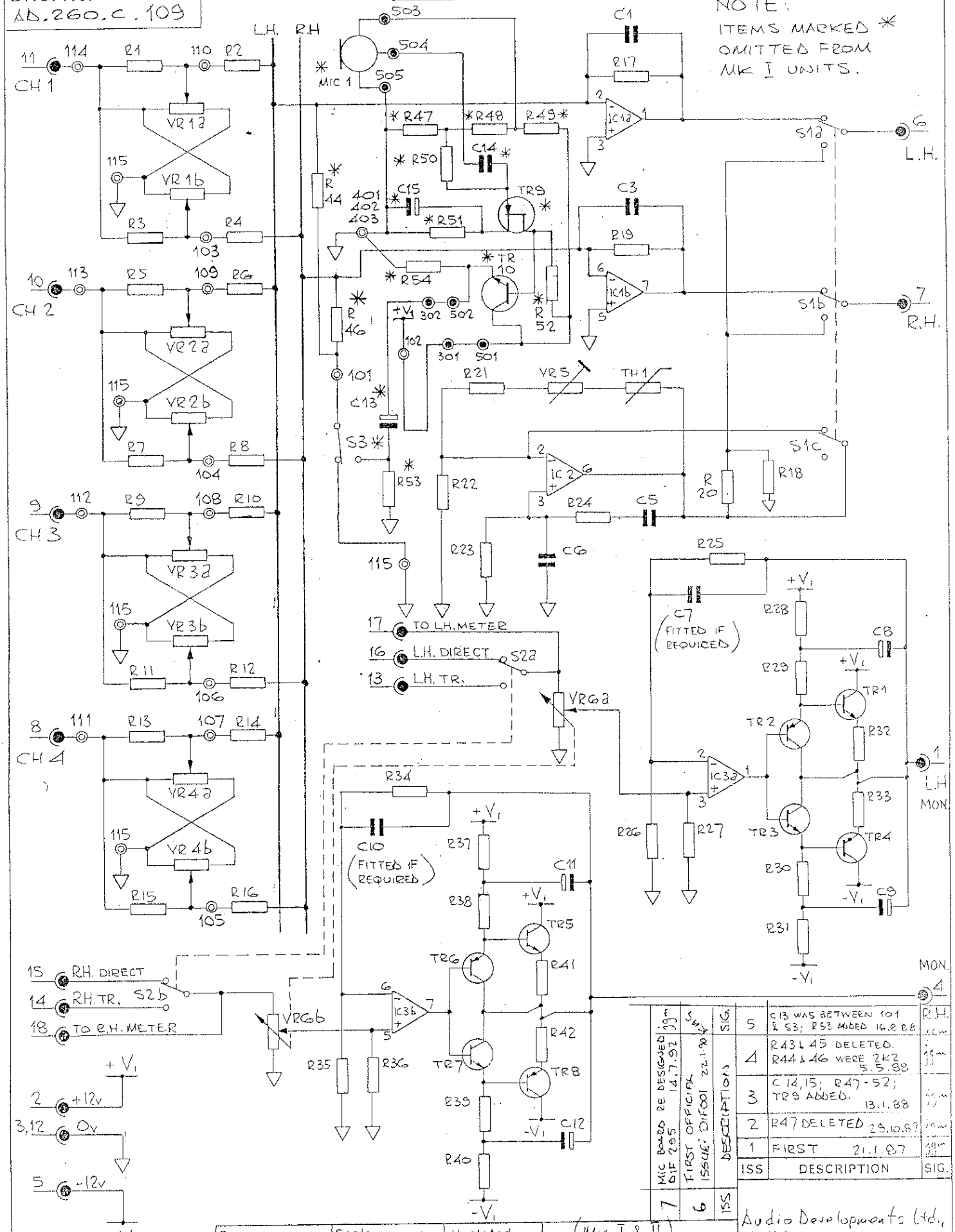

ISS	DESCRIPTION	SIG.
5	C13 WAS BETWEEN 101 & S3; R53 ADDED 16.8.88	R.H.
4	R43 & 45 DELETED. R44 & 46 WERE 2K2 5.5.88	jgm
3	C14,15; R47-52; TR9 ADDED. 13.1.88	jgm
2	R47 DELETED 29.10.87	jgm
1	FIRST 21.1.87	jgm

ISS	DESCRIPTION	SIG.
7	MIC BOARD RE DESIGNED DIF 295 14.7.92	jgm
6	FIRST OFFICIAL ISSUE: DIF001 22.1.90	

Drawn 21.1.87 jgm	Scale N/A	Unstated Tolerances	(MK I & II) ROUTING AND MONITOR BOARD — CIRCUIT DIAGRAM
Checked	Material N/A	2 Dec. Pl. ±·010	
Approved	Finish N/A	3 Dec. Pl. ±·005	
		Fractions ±·1/64	
		Metric ±·2mm	

Audio Developments Ltd.,
Hall Lane,
Walsall Wood, Staffs.

DRG. No. SHEET 1 OF 4
AD.260.C.109

DRG. No. SHEET 1 OF 7
AD.260.C.309

THIRD ANGLE PROJECTION

DO NOT SCALE

FOR SWITCHING OPTION SEE SHEET 4 OF THIS DRAWING.

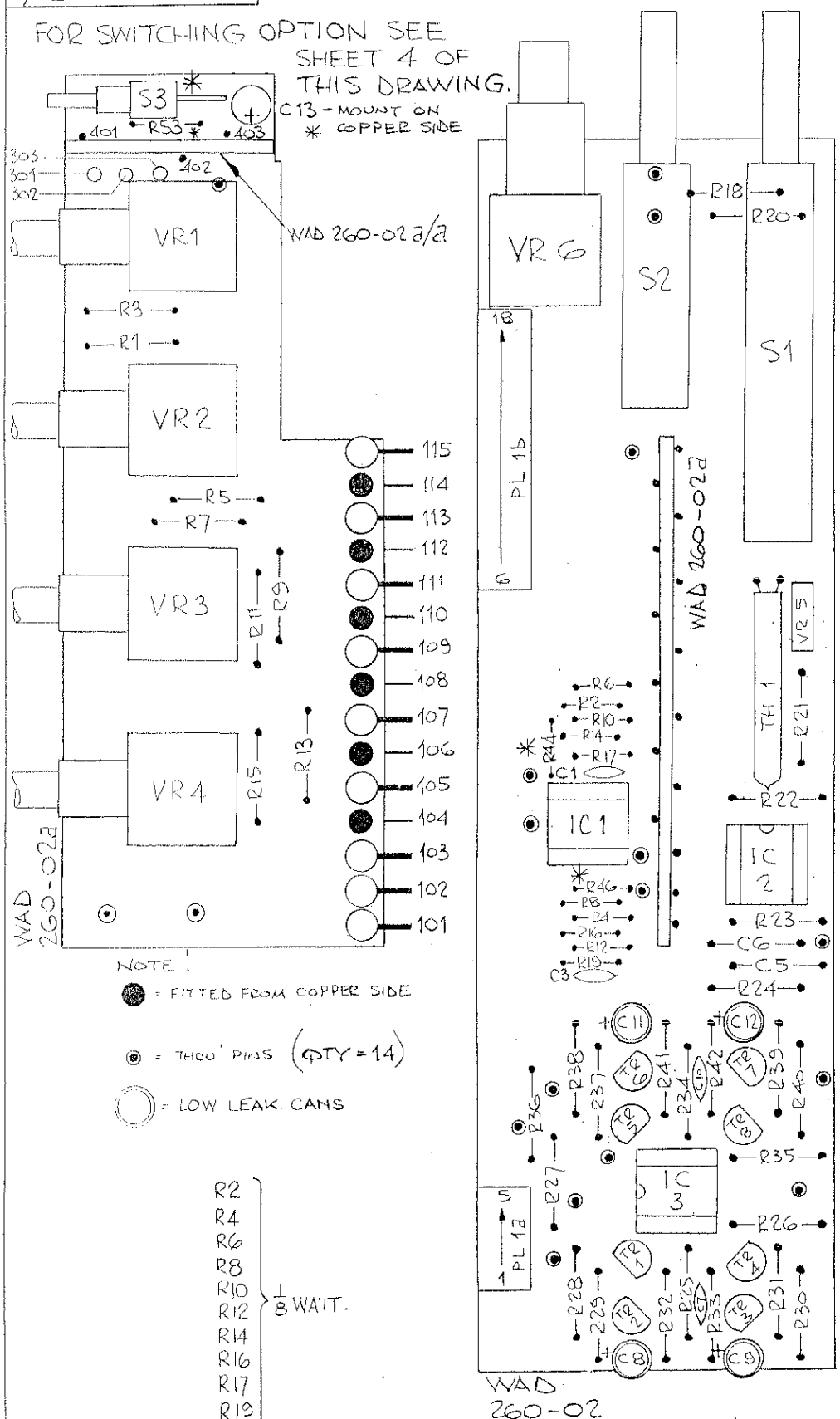

NOTE:

● = FITTED FROM COPPER SIDE

◎ = THRU' PINS (QTY = 14)

○ = LOW LEAK. CANS

R2
R4
R6
R8
R10
R12
R14
R16
R17
R19
R44
R46
R53
} ⅛ WATT.

NOTE!
CAPACITORS C7 & C10 FITTED IF REQUIRED.

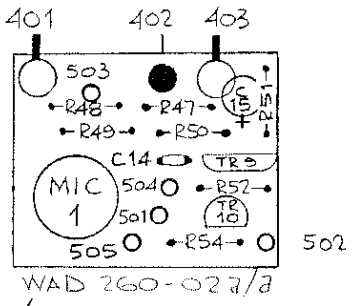

THIS BOARD AND ITEMS MARKED * OMITTED FROM MK I UNITS.

WIRING:-

501 - ORANGE TO 301.
502 - BLUE TO 302.
503 - RED
504 - PINK
505 - WHITE
303 - N.C.

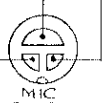

MIC REAR VIEW (PEDOKA)

THESE WIRES SOLDERED DIRECT TO COPPER SIDE OF BOARD WAD 260-02a/a

503 - RED
504 - WHITE
505 - SCREEN



MIC REAR VIEW (TANDY)

ISS	DESCRIPTION	SIG.
9	TANDY MIC WIRING ADDED DIF 405 25.3.94	jgm
8	MIC BOARD RE DESIGNED DIF 295 14.7.92	jgm
7	FIRST OFFICIAL ISSUE: DIF001 .22.1.90	jgm
6	NOTE ADDED TO WIRING OF HOLES 501-505 29.9.88	jgm
5	C13 MOVED LINK DELETED R53 ADDED 16.8.88	jgm
4	R44&46 WERE 2K2 R45 DELETED LINK WAS R43 5.5.88	jgm
3	C14,15; R47-52; AND TR9 ADDED. 14.1.88	jgm
2	R47 DELETED 29.10.87	jgm
1	FIRST 21.1.87	jgm

PCB NO. WAD 260-02	Drawn 21.1.87 jgm	Scale 2:1	Unstated Tolerances	(MK I & II) ROUTING AND MONITOR BOARDS — COMPONENT LOCATION	Audio Developments Ltd, Hall Lane, Walsall Wood, Staffs.
	Checked	Material N/A	2 Dec. Pl. ±.010		DRG. No. SHEET 1 OF 7 AD.260.C.309
	Approved	Finish N/A	3 Dec. Pl. ±.005 Fractions ±1/64 Metric ±.2mm		

(TAKEN FROM MS.260.C.309)

NOTE: Items marked * omitted from Mark I unit.

AD 260

MIXER/MONITOR - Panning Option

COMPONENT CROSS REFERENCE LIST

1. Capacitors

	C1	15pF
	C2	
	C3	15pF
	C4	
	C5	1500pF
	C6	1500pF
	C7	on test
	C8	10uF 25v low leak can
	C9	10uF 25v low leak can
	C10	on test
	C11	10uF 25v low leak can
	C12	10uF 25v low leak can
*	C13	10uF 16v
*	C14	22nF
*	C15	0.47uF 50v

2. Integrated Circuit

	IC1	NE 5532
	IC2	TL 061
	IC3	TL 062

3. Microphone

*	MIC 1	Electret Condenser

4. Resistors

	R1	6K8
	R2	22K - 1/8 watt
	R3	6K8
	R4	22K - 1/8 watt
	R5	6K8
	R6	22K - 1/8 watt
	R7	6K8
	R8	22K - 1/8 watt
	R9	6K8
	R10	22K - 1/8 watt
	R11	6K8
	R12	22K - 1/8 watt
	R13	6K8
	R14	22K - 1/8 watt
	R15	6K8
	R16	22K - 1/8 watt
	R17	47K - 1/8 watt
	R18	470R
	R19	47K - 1/8 watt
	R20	1K8
	R21	220R
	R22	470R
	R23	100K

4. Resistors (continued)

	R24	100K
	R25	100K
	R26	47K
	R27	100K
	R28	10K
	R29	10K
	R30	10K
	R31	10K
	R32	10R
	R33	10R
	R34	100K
	R35	47K
	R36	100K
	R37	10K
	R38	10K
	R39	10K
	R40	10K
	R41	10R
	R42	10R
*	R43	
*	R44	4K7 - 1/8 watt
*	R45	
*	R46	4K7 - 1/8 watt
*	R47	470R
*	R48	4K7
*	R49	4K7
*	R50	1M
*	R51	22K
*	R52	47K
*	R53	100K - 1/8 watt
*	R54	4K7

5. SWITCHES

	S1	4PCO BBM
	S2	2PCO BBM
*	S3	1PCO moment

6. Thermistor

	TH1	RA 53

7. Transistors

	TR1	BC 549
	TR2	BC 559
	TR3	BC 549
	TR4	BC 559
	TR5	BC 549
	TR6	BC 559
	TR7	BC 549
	TR8	BC 559
*	TR9	2N 5457
*	TR10	BC 549

AD 260

MIXER/MONITOR - Panning Option

COMPONENT CROSS REFERENCE LIST

8. Variable Resistors.

VR1	50K/50K Lin
VR2	50K/50K Lin
VR3	50K/50K Lin
VR4	50K/50K Lin
VR5	470K Pre-set
VR6	10K Log

DRG. No. SHEET 3 OF 4
AD.260.C.109

THIRD ANGLE PROJECTION

DO NOT SCALE

NOTE:
ITEMS MARKED * OMITTED FROM MK I UNITS.

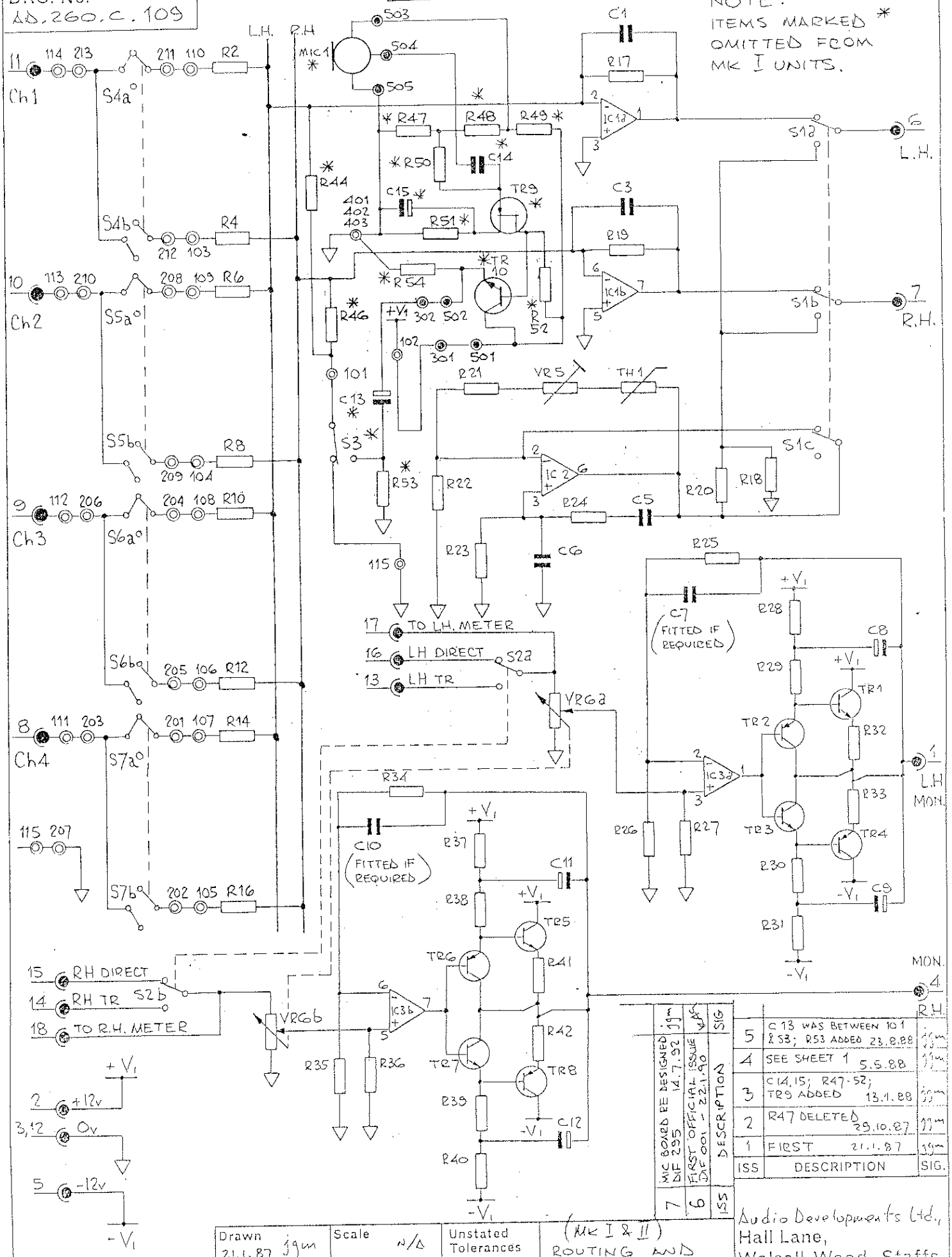

ISS	DESCRIPTION	SIG.
5	C13 WAS BETWEEN 101 & S3; R53 ADDED 23.8.88	RH
4	SEE SHEET 1 5.5.88	
3	C14,15; R47-52; TR9 ADDED 13.1.88	
2	R47 DELETED 29.10.87	
1	FIRST 21.1.87	

ISS	DESCRIPTION	SIG.
7	MIC BOARD RE DESIGNED DIF 295 14.7.92	
6	FIRST OFFICIAL ISSUE DIF 001 - 22.1.90	

Drawn 21.1.87	Scale N/A	Unstated Tolerances	(MK I & II) ROUTING AND MONITOR BOARD — CIRCUIT DIAGRAM
Checked	Material N/A	2 Dec. Pl. ±.010	
Approved	Finish N/A	3 Dec. Pl. ±.005	
		Fractions ±1/64	
		Metric ±.2mm	

Audio Developments Ltd.,
Hall Lane,
Walsall Wood, Staffs.

DRG. No. SHEET 3 OF 4
AD.260.C.109

DRG. No. SHEET 5 OF 7
AD.260.C.309

THIRD ANGLE PROJECTION

DO NOT SCALE

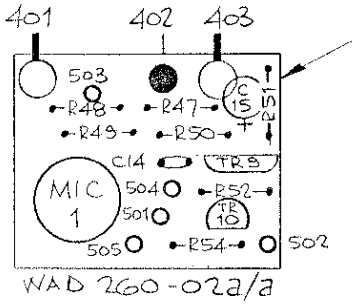

WAD 260-02a/a

THIS BOARD AND ITEMS MARKED * OMITTED FROM MK I UNITS.

FOR PANNING OPTION AND MODULE MAIN BOARD SEE SHEET 1 OF THIS DRAWING.

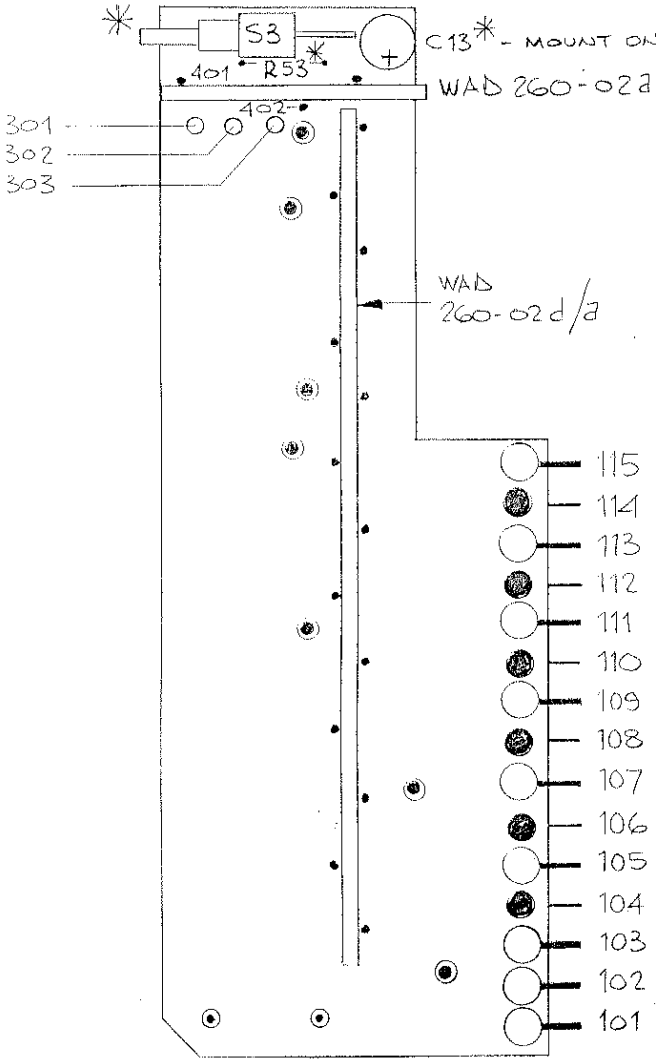

* MOUNT ON COPPER SIDE WAD 260-02a/a

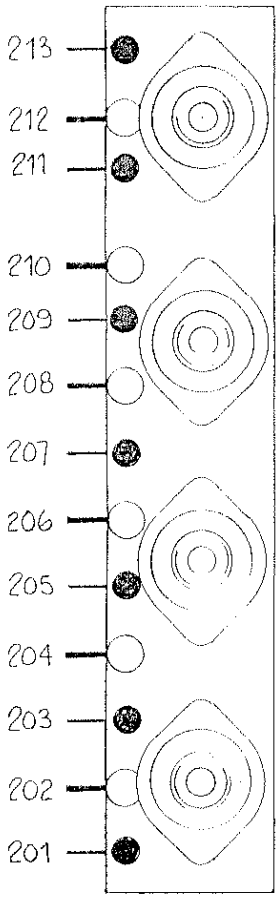

WAD 260-02d/a

ISS	DESCRIPTION	SIG.
10	TANDY MIC WIRING ADDED DIF 405 24.3.94	jgm
9	MIC BOARD RE DESIGNED DIF 295 14.7.92	jgm
8	FIRST OFFICIAL ISSUE DIF 001 - 22.1.90	
7	NOTE ADDED TO WIRING OF HOLES 501-505 25.9.89	jgm
6	C13 MOVED LINK DELETED R53 ADDED 23.8.88	jgm
5	LINK WAS R43 R45 DELETED 5.5.88	jgm
4	C14,15; R47-52; AND TR9 ADDED. 14.1.88	jgm
3	R47 DELETED 29.10.87	jgm
2	R43,45,47 & C13 ADDED 24.3.87	jgm
1	FIRST 20.1.87	

● THRU PINS (QTY. 7)

● FITTED FROM COPPER SIDE

WIRING
501 - ORANGE TO 301
502 - BLUE TO 302
503 - RED
504 - PINK
505 - WHITE
303 - N.C.

RED - 503
WHITE - 504
SCREEN - 505

THESE WIRES SOLDERED DIRECT TO COPPER SIDE ON BOARD NO WAD 260-02a/a

MIC REAR VIEW (TANDY)

MIC REAR VIEW (PEDOKA)

(MK I & II)
ROUTING AND MONITOR BOARDS
(SWITCHING OPTION)

COMPONENT LOCATION

Audio Developments Ltd.
Hall Lane,
Walsall Wood, Staffs.

P.C.B. NO. WAD 260-02	Drawn 20.1.87 jgm	Scale 2:1	Unstated Tolerances	DRG. No. SHEET 5 OF 7 AD.260.C.309
	Checked	Material N/A	2 Dec. Pl. ±.010	
	Approved	Finish N/A	3 Dec. Pl. ±.005	
			Fractions ±1/64	
			Metric ±.2mm	

(TAKEN FROM AD.260.C.304) MAY 29096R

NOTE: Items marked * omitted from Mark I unit.

AD 260

MIXER/MONITOR - Switching Option

COMPONENT CROSS REFERENCE LIST

(FOR MAIN BOARD COMPONENTS SEE SHEET 3 & 4)

1. Capacitors

*	C13	10uF 16v
*	C14	22nF
*	C15	0.47uF 50v

2. Microphone

*	Mic 1	Electret Condenser

3. Resistors

*	R47	470R
*	R48	4K7
*	R49	4K7
*	R50	1M
*	R51	22K
*	R52	47K
*	R54	4K7

4. Switches

*	S3	1PCO Moment
	S4	2 pole 3 way Rotary
	S5	2 pole 3 way Rotary
	S6	2 pole 3 way Rotary
	S7	2 pole 3 way Rotary

5. Transistor

*	TR9	2N 5457
*	TR10	BC 549

DRG. No. AD.260.D.101 SHT. 3 OF 4

PROJECTION

DO NOT SCALE

DRG. No. AD.260.D.101 SHT. 3 OF 4

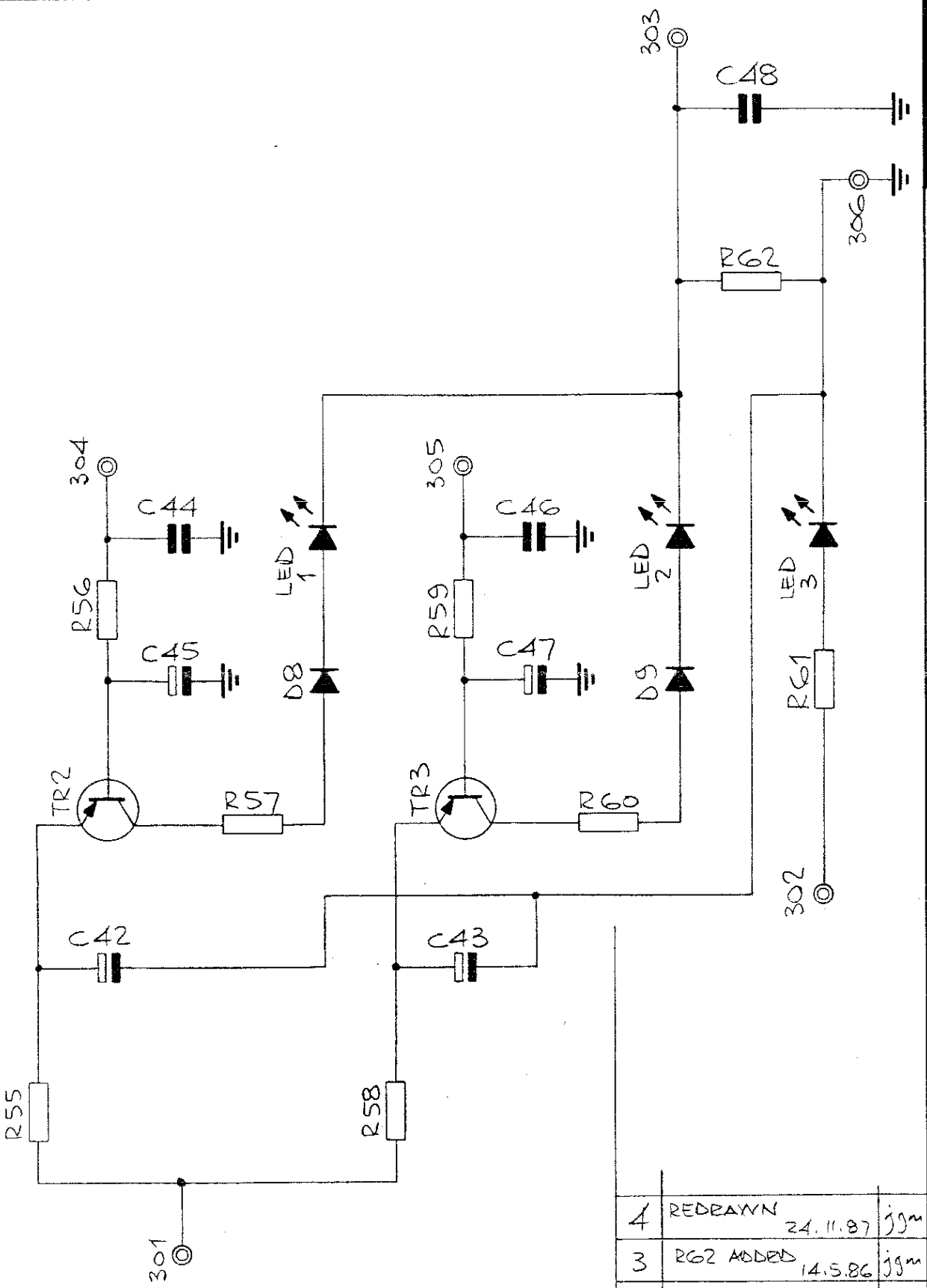

ISS.	REVISION/DATE	SIG.
4	REDRAWN 24.11.87	jgm
3	RG2 ADDED 14.5.86	jgm
2	LED COLOURS ADDED 6.5.86	jgm
1	FIRST 19.3.86	jgm

THE COPYRIGHT OF THIS DRAWING IS OWNED BY AUDIO DEVELOPMENTS LTD. AND ANY REPRODUCTION OF THIS DRAWING IN WHOLE OR PART WITHOUT THEIR WRITTEN AUTHORITY IS FORBIDDEN © 1987

DRAWN 26.11.87 jgm

CHECKED/APP'D.

SCALE

P.C.B. No.

TITLE

MOTHER BOARD (LED DRIVER SECTION) CIRCUIT DIAGRAM

Audio Developments Ltd.
Hall Lane, Walsall Wood, Walsall.
West Midlands, WS9 9AU. England
Tel. Brownhills (0543) 375351

PART No.

DRG. No. AD.260.D.101 SHT. 3 OF 4

DRG. No. AD.260 .D.301 SHT. 5 OF 7

PROJECTION

DO NOT SCALE

DRG. No. AD.260 .D.301 SHT. 5 OF 7

SEE SHEET 1 FOR REMAINDER OF MOTHER BOARD

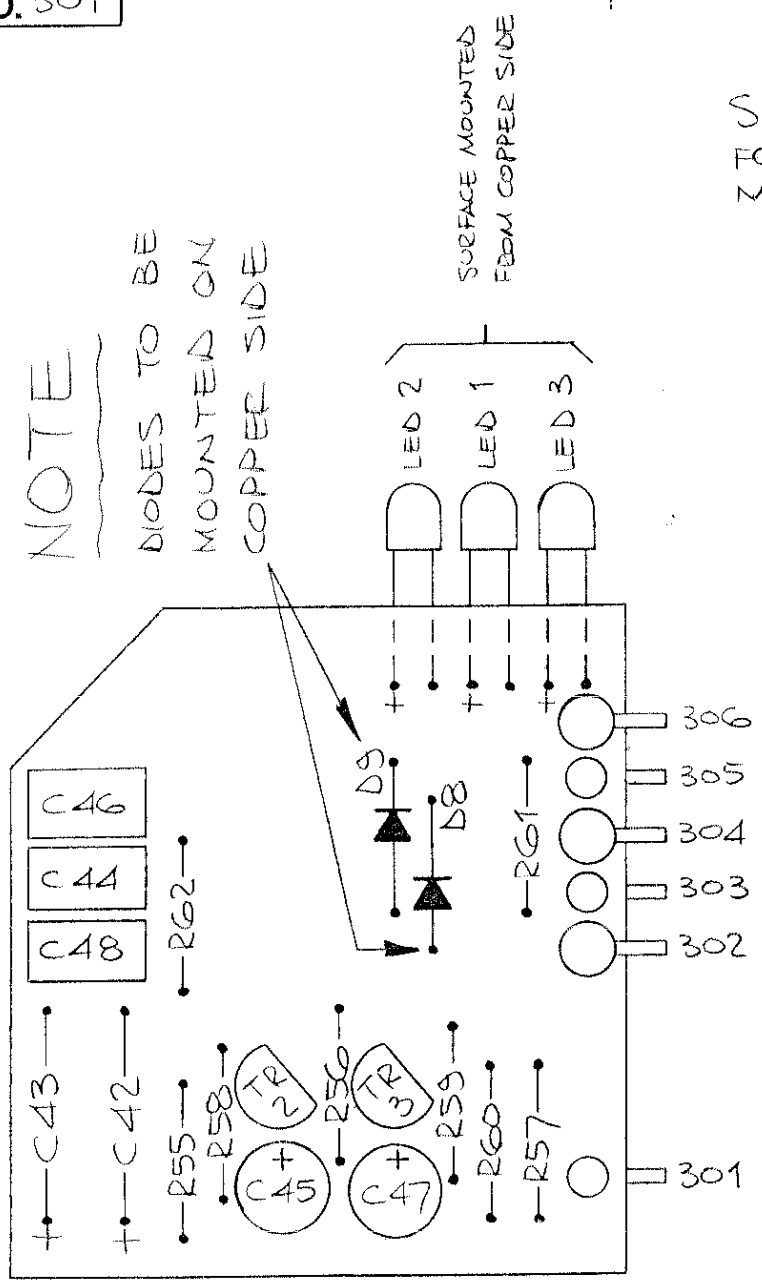

ISS.	REVISION/DATE	SIG.
5	DIODES WERE ON COMPT SIDE 11.9.89	jgm
4	REDESIGNED 26.11.87	jgm
3	RG2 ADDED 16.5.86	jgm
2	BOARD SHORTENED 6.4.86	jgm
1	FIRST 19.3.86	jgm

THE COPYRIGHT OF THIS DRAWING IS OWNED BY AUDIO DEVELOPMENTS LTD. AND ANY REPRODUCTION OF THIS DRAWING IN WHOLE OR PART WITHOUT THEIR WRITTEN AUTHORITY IS FORBIDDEN © 19 87

DRAWN 26.11.87 jgm

CHECKED/APP'D.

SCALE

P.C.B. No. WAD 260-032

TITLE: MOTHER BOARD (LED DRIVER SECTION)

COMPONENT LOCATION

Audio Developments Ltd.
Hall Lane, Walsall Wood, Walsall.
West Midlands, WS9 9AU. England
Tel. Brownhills (0543) 375351

PART No.

DRG. No. AD. 260 .D. 301 SHT. 5 OF 7

AD 260

L.E.D. DRIVER

COMPONENT CROSS REFERENCE LIST

1. Capacitors

C42	10 uF 25v
C43	10 uF 25v
C44	0.047 uF
C45	1 uF 63v
C46	0.047 uF
C47	1 uF 63v
C48	0.047 uF

2. Diodes

D8	1N 4148
D9	1N 4148

3. Light Emitting Diodes

LED1	Yellow
LED2	Green
LED3	Red

4. Resistors

R55	100R
R56	220K
R57	4K7
R58	100R
R59	220K
R60	4K7
R61	4K7
R62	47K

5. Transistors

TR2	BC559
TR3	BC559

DRG. No. AD. 043 .C. 103 SHT. 1 OF 2

PROJECTION:

DO NOT SCALE

DRG. No. AD. 043 .C. 103 SHT. 1 OF 2

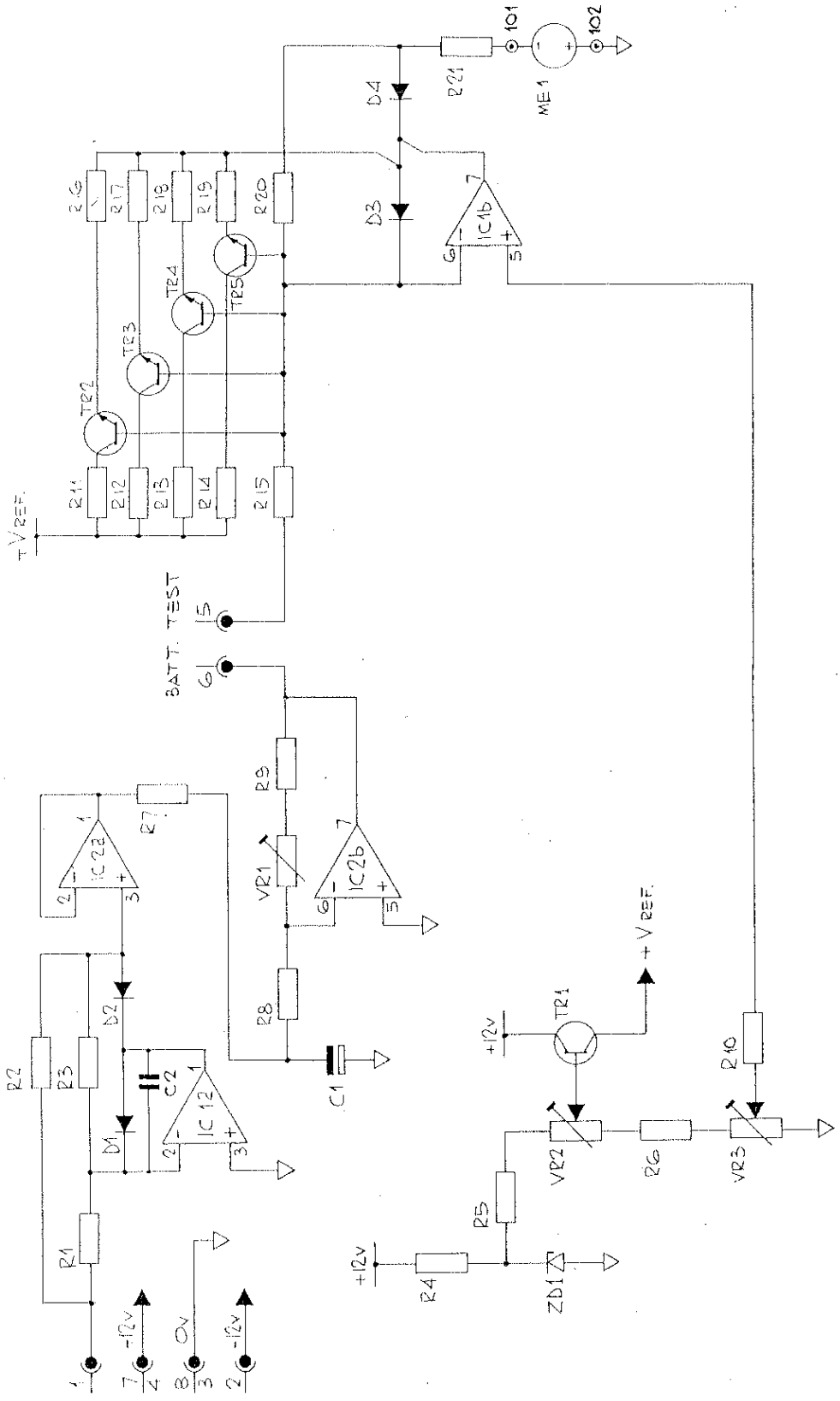

THE COPYRIGHT OF THIS DRAWING IS OWNED BY AUDIO DEVELOPMENTS LTD. AND ANY REPRODUCTION OF THIS DRAWING IN WHOLE OR PART WITHOUT THEIR WRITTEN AUTHORITY IS FORBIDDEN © 19

ISS.	REVISION/DATE	SIG.
1	REDRAWN FORMERLY AD.160.C.21 DIF.109 27.11.90	jgm

DRAWN	27.11.90 jgm
CHECKED/APP'D.	RT.
SCALE	N/A
P.C.B. No.	N/A
TITLE	PPM DRIVER — CIRCUIT DIAGRAM —
P.T. No.	
DRG. No.	AD. 043 .C. 103
SHT.	1 OF 2

Audio Developments Ltd.
Hall Lane, Walsall Wood, Walsall.
West Midlands, WS9 9AU. England
Tel. Brownhills (0543) 375351

MY(3)203628 R

DRG. No. SHT 1 OF 7 AD.043.D.303	THIRD ANGLE PROJECTION	DO NOT SCALE

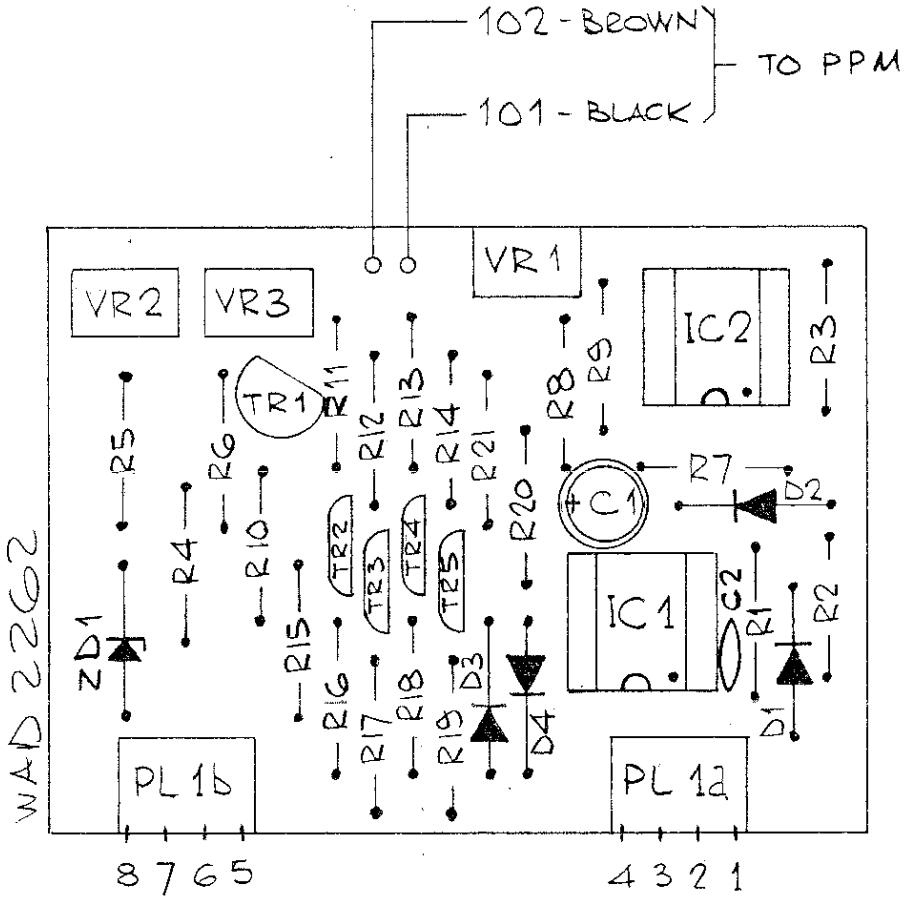

LOW LEAK CAN.

ISS	DESCRIPTION	SIG.
1	FORMERLY AD.160.D.22 DIF.109 27.11.90	jgm
6	FIRST OFFICIAL ISSUE. DIF001 - 23-1-90	
5	101 & 102 REVERSED 101 WAS WHITE 102 WAS PINK 12.7.88	jgm
4	C1 NOW LOW LEAK CAN. C2 ADDED. 18.4.84	
3	SEE SHEETS 2 & 3 10.4.84	
2	EDGE CONNECTOR PIN NOS. REVERSED. DRG. NO. WAS: AD.160.D.36 21.11.83	
1	FIRST 9.11.83	

Drawn jgm 9.11.83	Scale 2:1	Unstated Tolerances	PPM DRIVER
Checked MK	Material N/A	2 Dec.Pl. ±·010 3 Dec.Pl. ±·005	COMPONENT LOCATION DRAWING (MANUAL)
Approved RT.	Finish N/A	Fractions ± 1/64 Metric ±·2mm	

Audio Developments Ltd.,
Hall Lane,
Walsall Wood, Staffs

DRG. No. SHT 1 OF 7
AD.043.D.303

MY 26094 R

AD 043

PPM DRIVER

(BBC)

COMPONENTS CROSS REFERENCE LIST

1. Capacitors

C1	10 µF 16v low leak
C2	22 pF

2. Diodes

D1	1N 4148
D2	1N 4148
D3	1N 4148
D4	1N 4148

3. Op. Amps

IC1	TL 062
IC2	LM 392

4. Resistors

R1	20K
R2	10K
R3	10K
R4	10K
R5	1K
R6	10K
R7	47R
R8	100K
R9	300K
R10	22K
R11	22K
R12	39K
R13	120K
R14	390K
R15	24K
R16	20K
R17	30K
R18	68K
R19	120K
R20	82K
R21	3K6

5. Transistors

TR1	BC 549
TR2	ZTX 109
TR3	ZTX 109
TR4	ZTX 109
TR5	ZTX 109

6. Variable Resistors

VR1	200K
VR2	10K
VR3	1K

7. Zener Diode

ZD1	BZY 88 C5V6

AD 043

PPM DRIVER

(N.10)

COMPONENT CROSS REFERENCE LIST

1. Capacitors

C1	10 µF 16v low leak
C2	22pF

2. Diodes

D1	1N 4148
D2	1N 4148
D3	1N 4148
D4	1N 4148

3. Op. Amps

IC 1	TL 062
IC 2	LM 392

4. Resistors

R1	20K
R2	10K
R3	10K
R4	10K
R5	1K
R6	10K
R7	47R
R8	100K
R9	300K
R10	22K
R11	30K
R12	120K
R13	300K
R14	1M
R15	36K
R16	33K
R17	100K
R18	180K
R19	330K
R20	470K
R21	3K6

5. Transistors

TR1	BC 549
TR2	ZTX 109
TR3	ZTX 109
TR4	ZTX 109
TR5	ZTX 109

6. Variable Resistors

VR1	200K
VR2	10K
VR3	1K

7. Zener Diode

ZD1	BZY 88 C5V6

DRG. No. AD.043 .D. 104 SHT. 1 OF 2

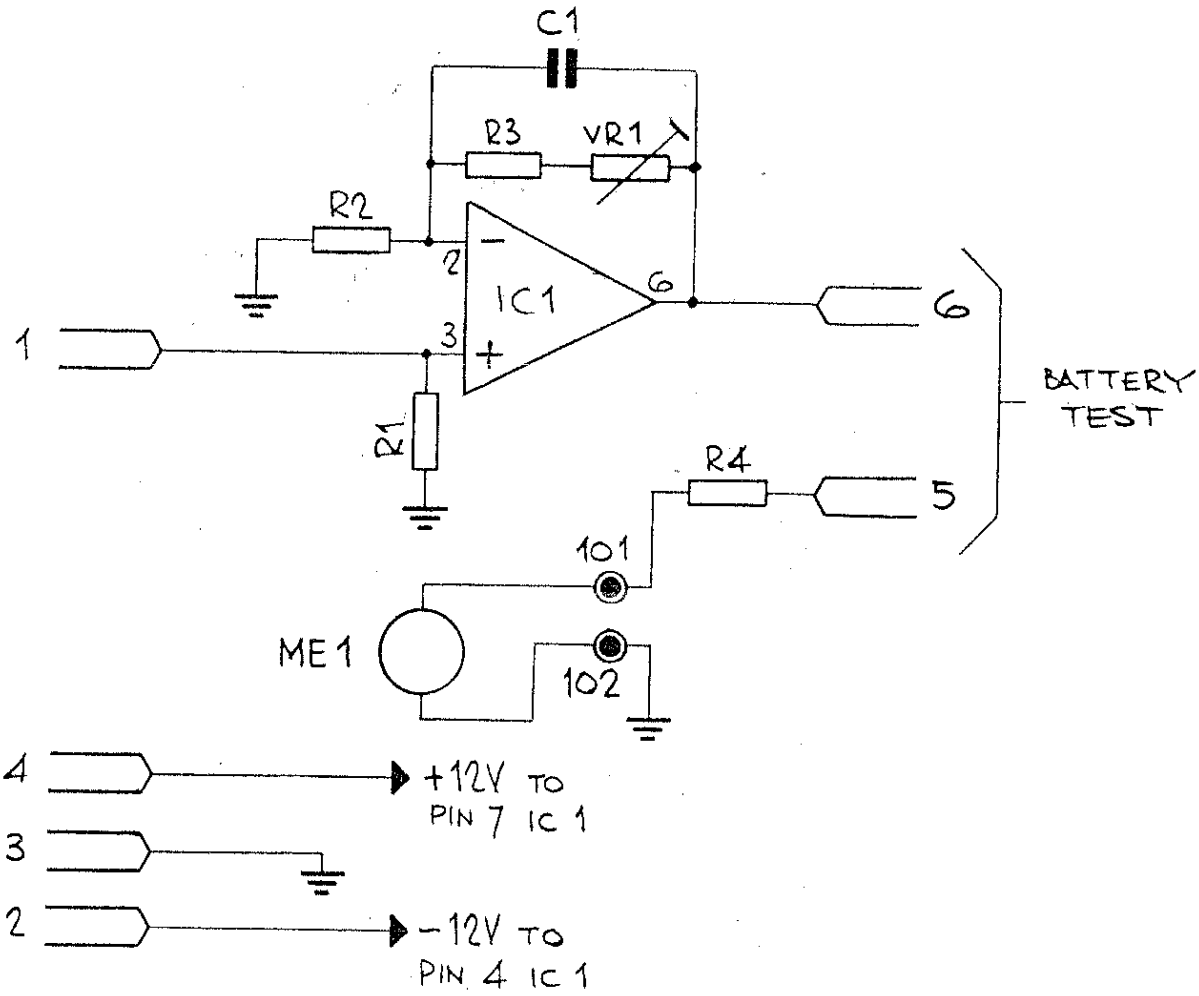

THE COPYRIGHT OF THIS DRAWING IS OWNED BY AUDIO DEVELOPMENTS LTD. AND ANY REPRODUCTION OF THIS DRAWING IN WHOLE OR PART WITHOUT THEIR WRITTEN AUTHORITY IS FORBIDDEN © 1992

ISS.	REVISION/DATE	SIG.
2	RE-DESIGNED & REDRAWN DIF 273 10.9.92	jgm

DRAWN jgm

CHECKED/APP'D. R.F.T.

SCALE N/A

P.C.B. No. N/A

TITLE: V.U. DRIVER

Audio Developments Ltd.
Hall Lane, Walsall Wood, Walsall.
West Midlands, WS9 9AU. England
Tel. Brownhills (0543) 375351

PART No.

DRG. No. AD.043 .D. 104 SHT. 1 OF 2

DRG. No. AD. 043 .D. 304 SHT. 1 OF 3

PROJECTION

DO NOT SCALE

DRG. No. AD. 043 .D. 304 SHT. 1 OF 3

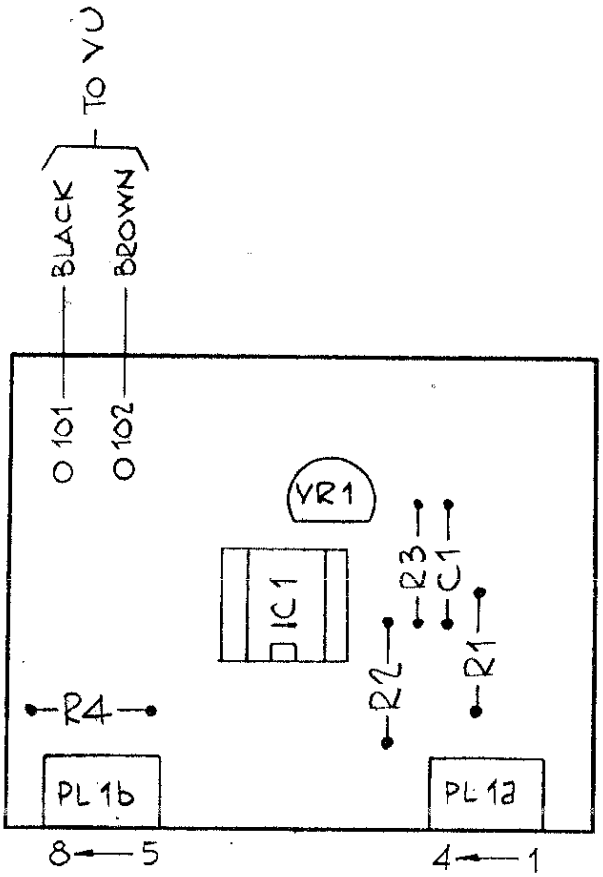

THE COPYRIGHT OF THIS DRAWING IS OWNED BY AUDIO DEVELOPMENTS LTD. AND ANY REPRODUCTION OF THIS DRAWING IN WHOLE OR PART WITHOUT THEIR WRITTEN AUTHORITY IS FORBIDDEN © 1992

ISS.	REVISION/DATE	SIG.
2	RE-DESIGNED & REDRAWN DIF 273 10.9.92	jgm

DRAWN jgm

CHECKED/APP'D. RFT.

SCALE 155%

P.C.B. No. 62-016-011

TITLE: VU DRIVER

Audio Developments Ltd.
Hall Lane, Walsall Wood, Walsall.
West Midlands, WS9 9AU. England
Tel. Brownhills (0543) 375351

PART No. 88-016-011

DRG. No. AD. 043 .D. 304 SHT. 1 OF 3

MY (2) 202628 B

AD 043

VU DRIVER

COMPONENT CROSS REFERENCE LIST

1. Capacitors

C1	100pF

2. Op. Amp

IC1	TL 061

3. Resistors

R1	1M
R2	27K
R3	22K
R4	3K6

4. Variable Resistors

VR1	10K

DRG. No. SHT 1 OF 2
AD.100.C.67

THIRD ANGLE PROJECTION

DO NOT SCALE

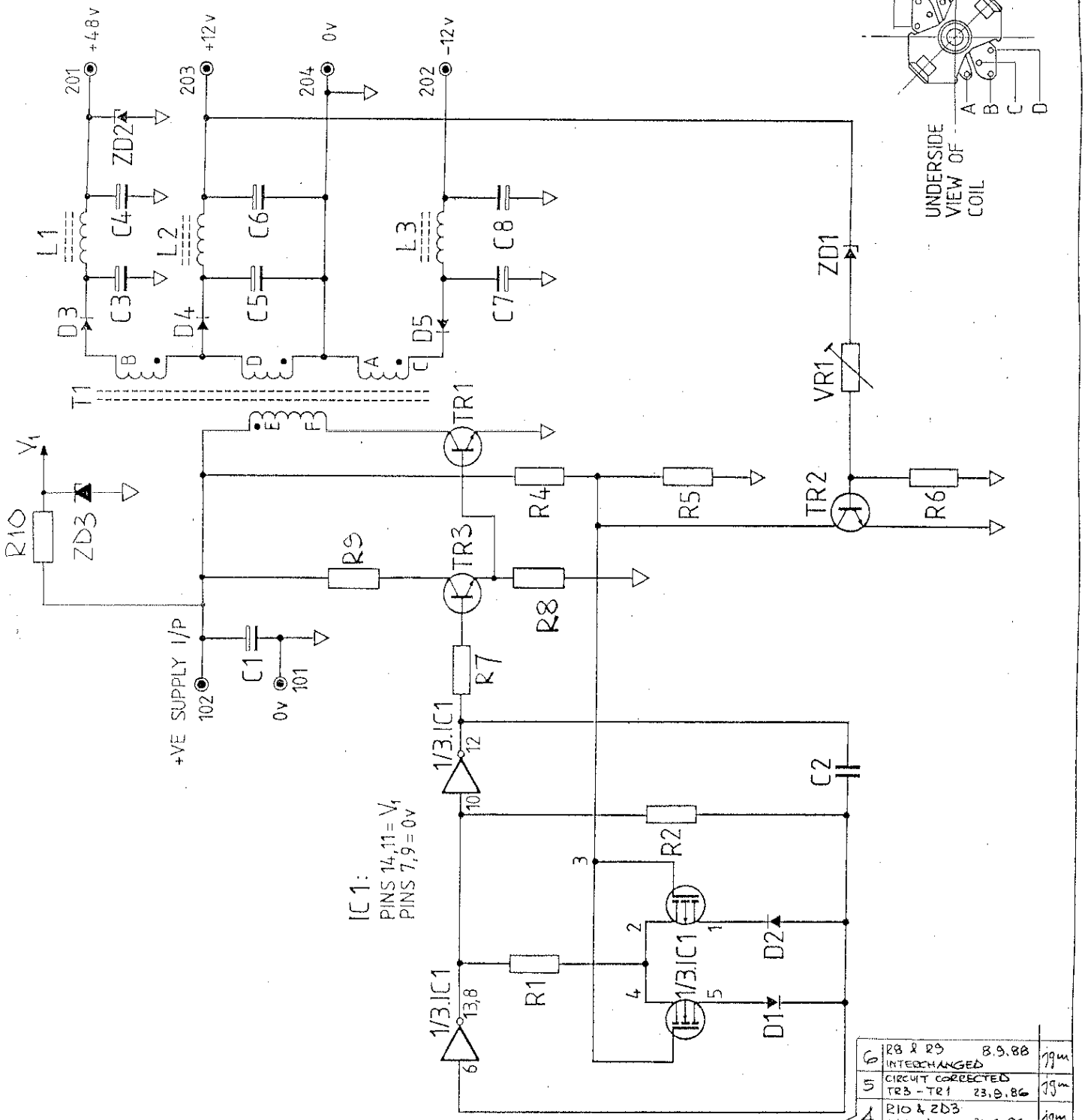

ISS	DESCRIPTION	SIG.
6	R8 & R9 INTERCHANGED 8.9.88	jgm
5	CIRCUIT CORRECTED TR3 - TR1 23.9.86	jgm
4	R10 & ZD3 ADDED 30.6.86	jgm
3	SEE SHEET 2 7.2.85	jgm
2	R3 DELETED. R7, R8, R9, TR3 ADDED 18.12.84	jgm
1	DRG. NO. WAS AD.100.C.68 (FIRST ISSUE) 6.12.83	
1	FIRST 18.5.83	

Drawn 18.5.83 jgm	Scale 1	Unstated Tolerances	CONVERTER CIRCUIT DIAGRAM (WITH COMPONENT VALUES)
Checked	Material	2 Dec Pl ± 010 3 Dec Pl ± 005 Fractions ± 1/64 Metric ± 2mm	
Approved	Finish		

AUDIO DEVELOPMENTS,
Hall Lane,
Walsall Wood, Staffs.

DRG. No. SHT. 1 OF 2
AD.100.C.67

DRG. No. SHT 1 OF 3 AD.100.D.68	THIRD ANGLE PROJECTION	DO NOT SCALE

USED ON:-

AD.145
AD.160

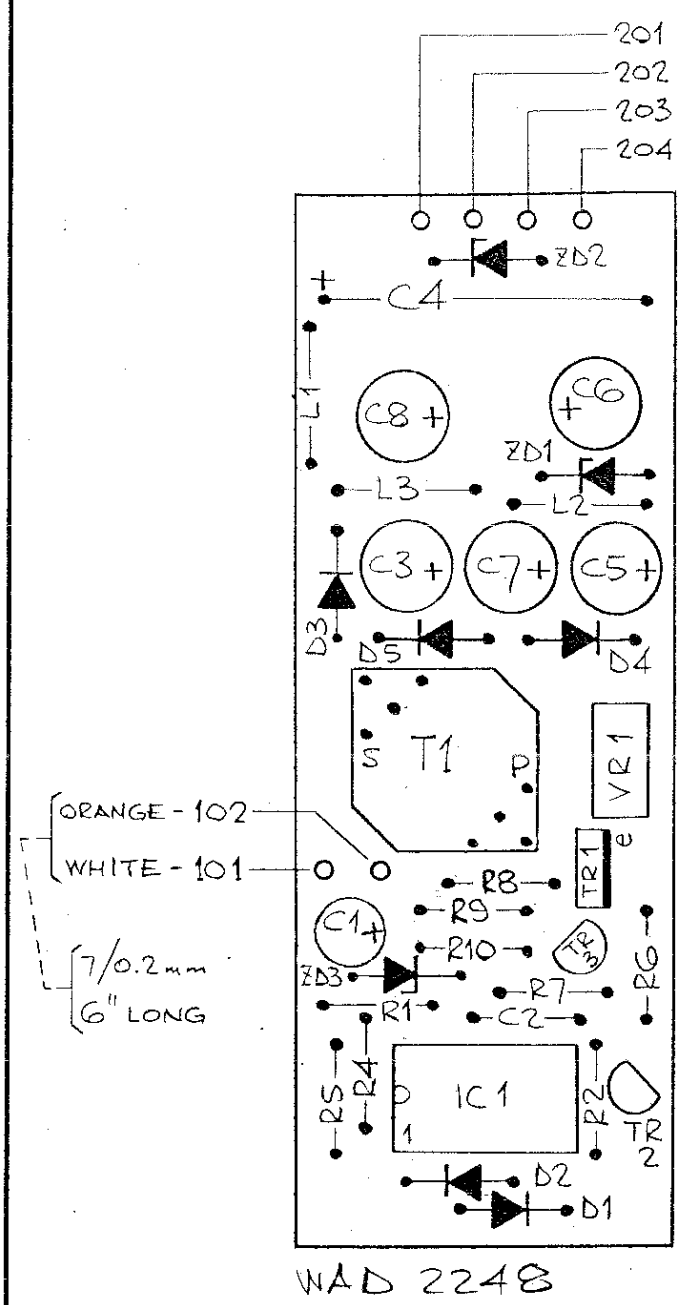

WAD 2248

ISS	DESCRIPTION	SIG.
8	R8 & R9 8.9.88 INTERCHANGED	jgm
7	R10 & ZD3 ADDED 30.6.86	jgm
6	SEE SHEET 2 7.2.85	jgm
5	WIRE LENGTH 12" WAS 9" R8 + R9 INTERCHANGED 4-2-85	jgm
4	R3 DELETED R7, R8, R9, TR3 ADDED 18.12.84	jgm
3	WIRE LENGTHS INCREASED BY 2" 19.4.84	jgm
2	WIRE HOLE NOS. MODIFIED TO CONFORM TO CIRCUIT DIAGRAM 15.12.83	jgm
1	DRG. NO. WAS AD.100.D.65 6.12.83	jgm
1	1ST ISSUE 19.8.83	jgm

Drawn 19.8.83 jgm	Scale	Unstated Tolerances
Checked	Material	2 Dec. Pl. ±·010 3 Dec. Pl. ±·005
Approved	Finish	Fractions ± 1/64 Metric ±·2mm

CONVERTER COMP'T. LOCATION DRG. (MANUAL)

Audio Developments Ltd.,
Hall Lane,
Walsall Wood, Staffs

DRG. No. SHT. 1 OF 3
AD.100.D.68

MY 26094 R

AD 100

CONVERTER

COMPONENT CROSS REFERENCE LIST

1. Capacitors

C1	220 µF 16v
C2	330 pF
C3	47 µF 63v
C4	100 µF 63v
C5	220 µF 16v
C6	220 µF 16v
C7	220 µF 16v
C8	220 µF 16v

2. Diodes

D1	IN 4148
D2	IN 4148
D3	BY 206
D4	BY 206
D5	BY 206

3. Inductances

L1	220 µH
L2	220 µH
L3	220 µH

4. Resistors

R1	4K7
R2	100K
R3	-
R4	12K
R5	39K
R6	1K
R7	1K5
R8	150R
R9	470R
R10	82R

5. Op. Amps

IC1	4007 UB

6. Transistors

TR1	BD 131
TR2	BC 109C
TR3	2N 3904

7. Transformer

T1	RM7 250

8. Variable Resistor

VR1	2K2

9. Zener Diode

ZD1	BZY 88 C11
ZD2	BZX 61 C56
ZD3	BZY 88 C18

DRG. No. AD 100-07 D.05 Sht.3 of 3	THIRD ANGLE PROJECTION	DO NOT SCALE

INSTRUCTIONS FOR CONNECTING P.S.U. TYPE NOS. AD100-07 and AD100-24

- to -

MIXER, TYPE NO. AD 160

A 2-core lead is required, connected as follows:-

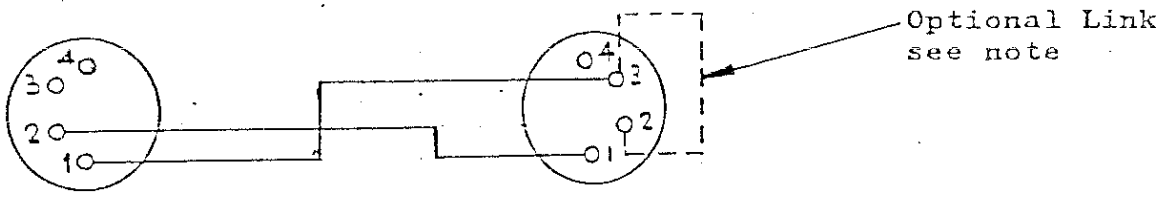

P.S.U. Output Mixer Power Input

NOTE: If rechargeable (Nickel Cadmium) Batteries are fitted to the Mixer, link Pins 2 and 3 in the Connector at the Mixer end of the cable to bring the constant current charger in the Mixer into operation.

Some earlier models of Mixer required a separate +48v supply and optional constant current charger. These are provided in the AD 100-02 P.S.U. with their outputs connected to Pins 4 and 3 respectively. They are not required by the Mixer listed here and should NOT be used.

ISS	DESCRIPTION	SIG.
1	First 27.1.84	

Drawn	Scale	Unstated Tolerances	Instructions for connecting P.S.U.	Hall Lane, Walsall Wood, Staffs
Checked	Material	2 Dec.Pl. ±.010 3 Dec.Pl. ±.005		DRG. No. Sht. 3 of 3 AD 100-07 D.05
Approved	Finish	Fractions ± 1/64 Metric ±.2mm		

MY 26094 R