OWNER'S MANUAL

Fender®

MUSICAL INSTRUMENTS
1300 E. Valencia Fullerton, California 92631

TELECASTER THINLINE

MANUAL NO. 010339 (L/GE)

Downloaded from www.Manualslib.com manuals search engine

TELECASTER THINLINE

Your new Fender Guitar incorporates the highest standards of craftsmanship and quality components. As a Fender owner you can be proud and self-assured in the knowledge that you have the finest.

Your playing pleasure will be enhanced if you become thoroughly acquainted with all of the features of your instrument. Please read this instruction manual carefully and completely. If you need more information, contact your authorized Fender Dealer.

Copyright© 1975 CBS Musical Instruments
a Division of CBS Inc.

Downloaded from www.Manualslib.com manuals search engine

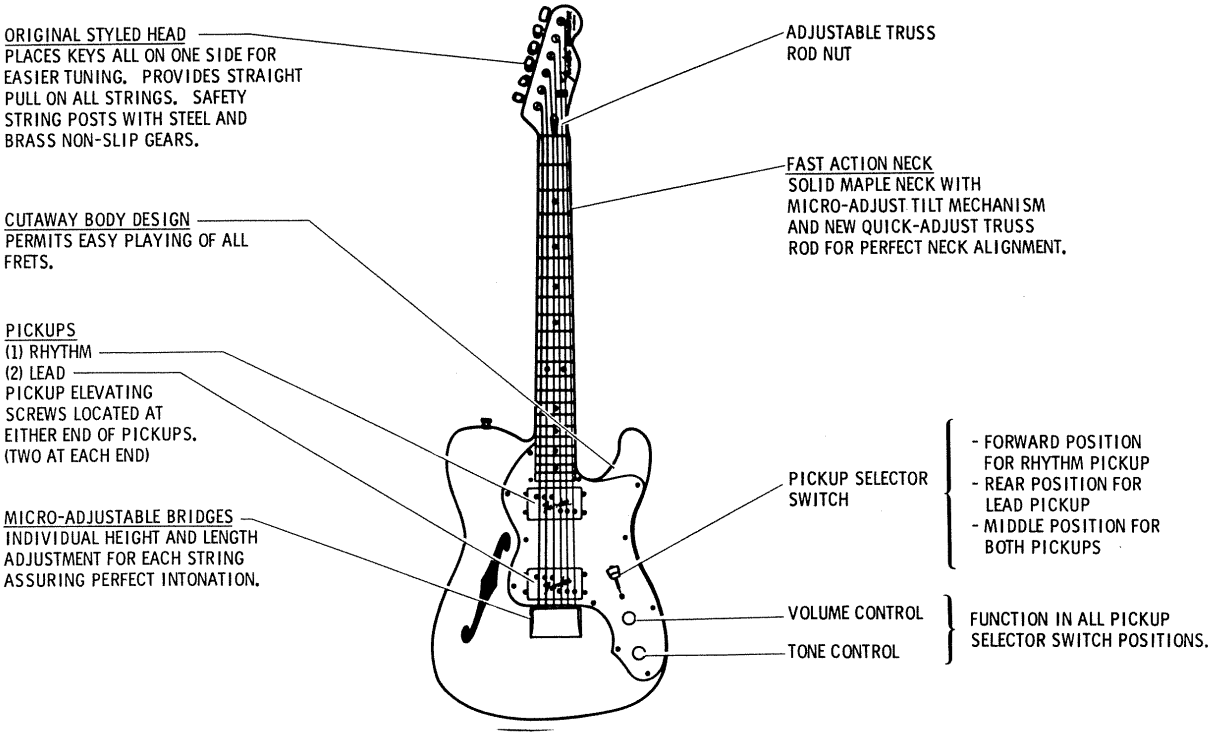

FIGURE 1

Downloaded from www.Manualslib.com manuals search engine

PICKUP ADJUSTMENT

The height of each of the two pickups is adjusted by turning the four outboard screws (two on each side) clockwise to raise and counter-clockwise to lower. For optimum performance, the pickup covers should be 1/16 inch below the first and sixth strings when these strings are played on the last fret.

A string is adjusted for balance by turning the magnetic pole screw which is directly under it. If a string sounds weak, in relation to the other strings, raise the screw by turning it counter-clockwise. If a string sounds too loud, lower the screw by turning it clockwise.

Note: Normally, the second string screw should be somewhat lower than the other screws and the first and sixth string screws should not extend above the pickup cover.

STRING HEIGHT ADJUSTMENT

Six individual bridges are located under the snap-on bridge cover. Each has two height adjusting screws (use allen-wrench provided).

To raise the strings turn the screws clockwise. To lower the strings turn the screws counter-clockwise. Low string action makes for easier playing but if the strings are too low they will buzz on the frets.

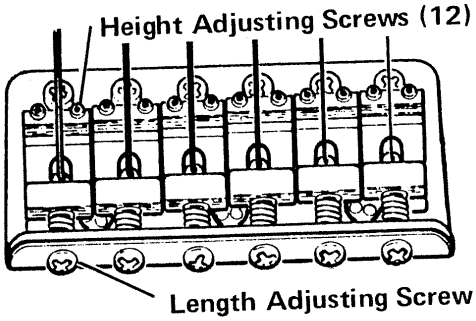

FIGURE 2

Downloaded from www.Manualslib.com manuals search engine

STRING LENGTH ADJUSTMENT

There are six length adjusting screws (Fig. 2). If a string sounds flat when played at the twelfth fret compared with the open string harmonic at the same fret, turn the screw counter-clockwise to shorten the string. If a string sounds sharp to the harmonic, turn the screw clockwise to lengthen the string.

FENDER/BIGSBY TREMOLO (OPTIONAL)

The Fender/Bigsby Tremolo (optional original equipment or available in kit form) now makes it possible to lower or raise the pitch of the Telecaster by lowering or raising the tremolo handle. For optimum tremolo performance the handle should be parallel with the instrument body when not in use.

Should the handle be out of position because of a string gauge change, the spacer and/or spring under the handle must be changed. First, loosen the strings in order to remove the spring and spacer (if any), from under the handle. If light gauge strings are used, the tension on the tremolo will be lessened and therefore the handle will raise. To lower the handle to its optimum position, the spacer must be removed and/or the spring must be replaced with one shorter. Conversely, if the handle is too low, a longer spring and/or

Downloaded from www.Manualslib.com manuals search engine

FENDER/BIGSBY TREMOLO (OPTIONAL) (CONTINUED)

larger spacer must be used. An extra spacer and spring have been included with the unit in order that the tremolo may be kept at peak performance no matter what strings are used. Figure 3.

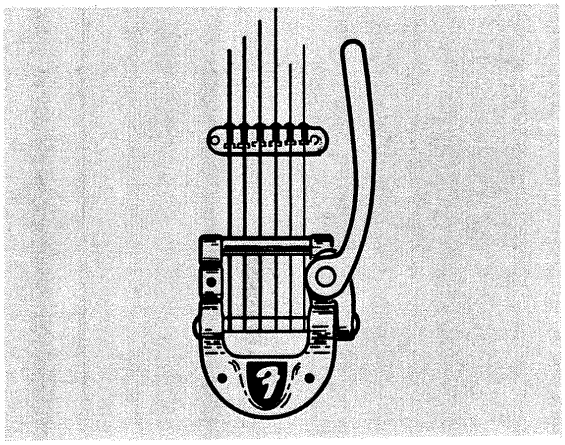

FIGURE 3

STRING HEIGHT ADJUSTMENT (MODEL WITH TREMOLO)

The bridge employed on the Telecaster Thinline with Tremolo utilizes a bridge channel supported at each end. You will note this channel "floats" or rocks on the bridge posts. The purpose of this design feature is to provide smooth tremolo action, eliminating undue wear of the strings. To raise the channel at either end, insert an allen wrench in the bridge posts and raise or lower it as desired.

If all of the strings are to be raised or lowered, it is better to adjust the entire

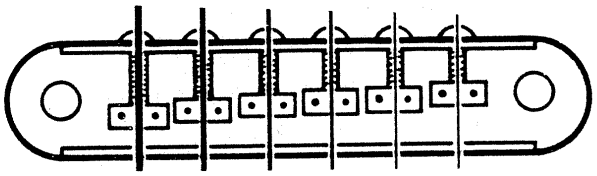

FIGURE 4

Downloaded from www.Manualslib.com manuals search engine

STRING HEIGHT ADJUSTMENT (CONTINUED)

bridge channel first, then adjust the individual string height as desired. With this type of bridge, extremely low playing action can be obtained facilitating fast playing action and ease of playing.

STRING LENGTH ADJUSTMENT (MODEL WITH TREMOLO)

Follow the same procedure as described on page 3.

STRING CHANGE AND ADJUSTMENT

Changing from the original strings may cause the instrument to fret improperly and to have improper intonation. This may be corrected by making the proper string adjustments.

ADJUSTABLE NECK TRUSS ROD

A 1/8" allen wrench is provided to use with the bullet-shaped neck adjustment nut (Fig. 5). If the neck is bowed away from the strings the nut should be tightened (clockwise). If the neck is bowed toward the strings, the nut should be loosened (counter-clockwise). While turning the nut it may be helpful to apply pressure to the neck in the same direction as the required adjustment.

Downloaded from www.Manualslib.com manuals search engine

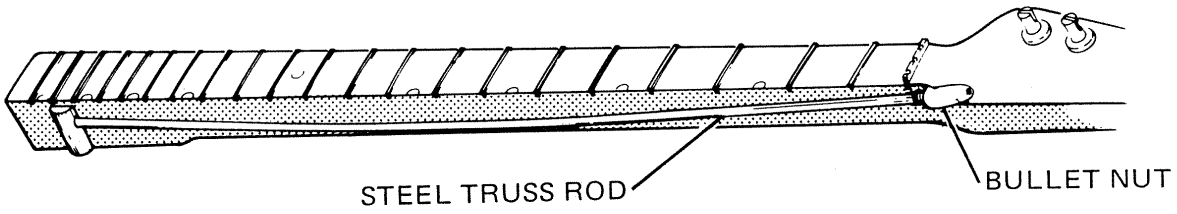

Figure 4

ADJUSTABLE NECK TRUSS ROD

String tension pulls the guitar head forward increasing the distance between the frets and the strings. The steel Truss Rod exerts a counter force to the pull of the strings.

The bullet nut at the guitar head is used to adjust the tension of the Truss Rod. Insert the allen wrench, provided with the guitar, in the bullet nut and tighten it (clockwise) if the middle of the fretboard is bowed away from the strings. If the neck is bowed toward the strings the bullet nut should be loosened. Usually, only a small adjustment is required, such as a quarter turn. While turning the nut it is helpful to apply pressure to the neck in the same direction as the required adjustment.

NOTE: When loosening the bullet nut, place the guitar on its back with a block (such as a book) under the head and apply pressure to the middle of the neck.

Downloaded from www.Manualslib.com manuals search engine

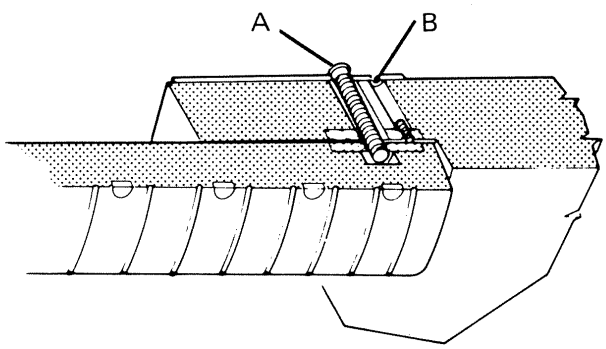

Figure 5

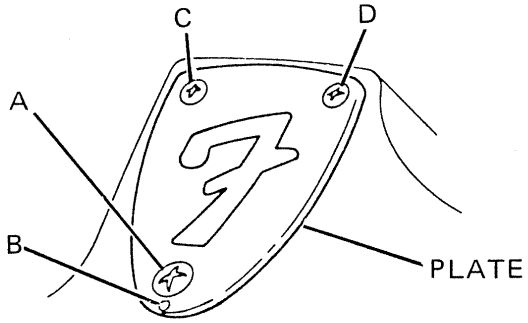

(BACK OF GUITAR)

Figure 6

MICRO-TILT NECK ADJUSTMENT

To adjust the alignment of the neck to the body, loosen lock screw "A" two full turns. Screws "C" and "D" need not be loosened. Insert the 3/32 allen wrench (furnished with instrument) through hole "B" in the neck plate and into the set screw in the bottom of the hole. To increase the angle, turn the screw clockwise. To decrease the angle, turn the screw counterclockwise. When desired adjustment is reached, tighten lock screw "A" and recheck, as tightening the lock screw may alter the adjustment slightly.

Downloaded from www.Manualslib.com manuals search engine

REPLACEMENT STRINGS:

Recommended for your Telecaster Thinline

Fender	1500 Set — Regular	Standard Gauge
Fender	150 Set — Regular	Light Gauge
Fender	50 Set — Flat Wound	Standard Gauge
Fender	505 Set — Flat Wound	Light Gauge

ACCESSORIES FOR YOUR FENDER GUITAR

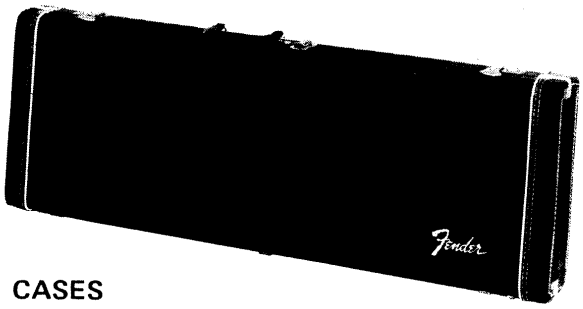

CASES

Available for the Telecaster Thinline guitar. Covered with durable scuff-resistant vinyl and single-stitched. Accessory compartment is provided.



FENDER BLENDER

Fuzz and sustain unit for sound modification. Blends and sustains tone to any pre-set level.

Downloaded from www.Manualslib.com manuals search engine

ACCESSORIES (CONTINUED)

PICKS
Fender professional guitar picks are preferred by guitar players throughout the world. Available in thin, medium or heavy weights.

GUITAR POLISH
Non-abrasive, non-oily. For all guitar finishes and hardware. Cleans and protects. Aerosol can.

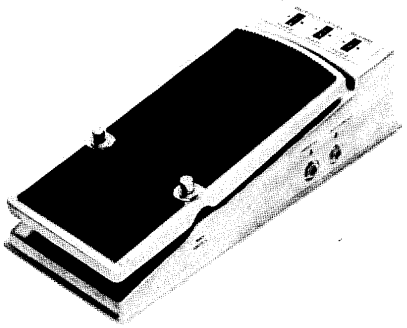

FUZZ/WAH/VOLUME PEDAL

Up and down foot control for the Fuzz, Wah and Volume. Separate foot switches for the Fuzz and Wah. Fingertip pre-setting of balance and blend of the Fuzz and Wah.

Downloaded from www.Manualslib.com manuals search engine

FAMOUS FENDER AMPLIFIERS

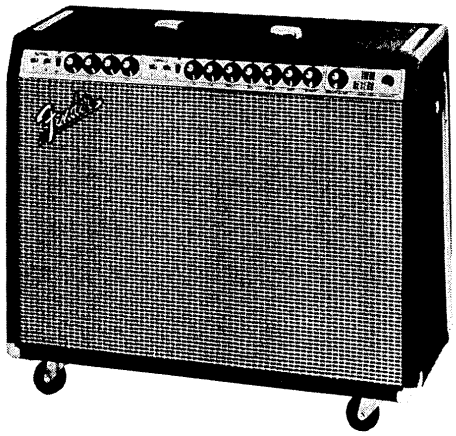

TWIN REVERB
A favorite among top musicians. **135** watts RMS power with ~~200~~ watts peak music power.

Specifications: Two heavy duty 12 inch speakers.

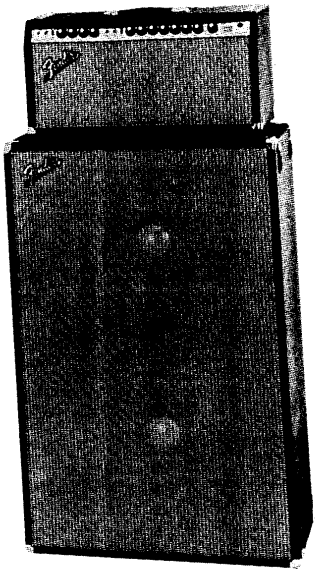

DUAL SHOWMAN REVERB
One of Fender's top piggyback amplifiers. Authentic built-in reverb and vibrato.

Specifications: **135** watts RMS power with ~~220~~ watts peak music power.

Downloaded from www.Manualslib.com manuals search engine

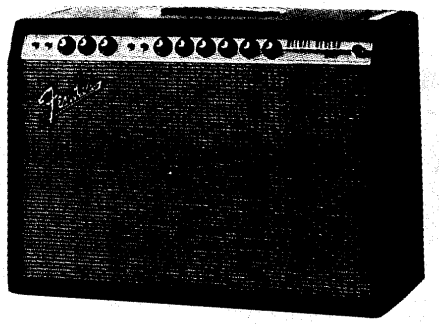

DELUXE REVERB
A top performer in the popular price range with a wide range 12 inch speaker for true tone reproduction.

Specifications: 20 watts RMS; 44 watts peak music power.

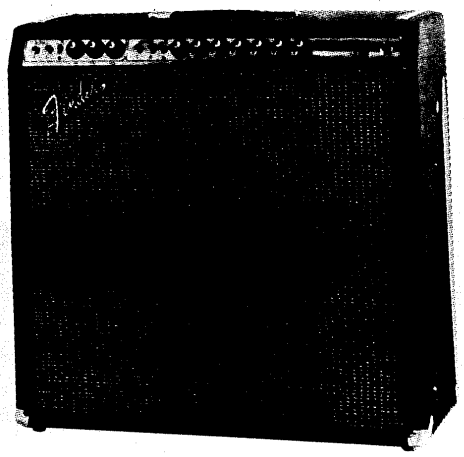

SUPER-REVERB
Widely used in clubs and studios for its reliable performance. Four heavy duty 10 inch speakers.

Specifications: 70 watts power with ~~100~~ watts peak music power.

Downloaded from www.Manualslib.com manuals search engine

LIMITED WARRANTY

Fender Musical Instruments warrants this product to be free from defects in materials and workmanship for a period of one (1) year from date of purchase. All implied warranties are limited to the period of this express warranty. This warranty does not apply to [redacted] any-one other than authorized dealers to strings to products which have been subjected to alteration, misuse, accident, neglect (such as extremes of temperature and/or moisture), or to wear resulting from normal usage.

This warranty becomes effective upon receipt of the completed attached registration card within ten (10) days after date of purchase. Upon its receipt, the purchaser will be sent a personalized identification card. Presentation of the card within the warranty period will entitle the purchaser to receive service and repair from any authorized dealer, or upon manufacturer's prior written approval, the factory service center. Transportation charges to and from the factory service center shall be borne by the purchaser. Service and repair will include all labor and materials necessary to make the repairs and replacements covered under the terms of this warranty.

THIS WARRANTY IS VOID IF REGISTRATION CARD IS NOT RETURNED WITHIN TEN DAYS

Downloaded from www.Manualslib.com manuals search engine

FENDER GUITAR ONE YEAR WARRANTY REGISTRATION

TELECASTER THINLINE

The Fender warranty becomes effective only if this card is returned to Fender Musical Instruments within ten (10) days after purchase. It should be filled out, signed, detached, and mailed immediately. Upon receipt of this card, you will be mailed your Fender-owner identification card.

Purchase date _____ Serial No. _____

Owner's name _____ Age _____ Sex _____

Address _____ City _____ State _____

Zip _____ Purchased from _____

City _____ State _____

Owner's Signature _____

I am: professional ☐ semi-professional ☐ amateur ☐

I bought a Fender because of:

Personal preference ☐ Advertising ☐ Reputation ☐ Recommended ☐ Other ☐

Education: Years _____

List two of your favorite magazines _____

Downloaded from www.Manualslib.com manuals search engine

PLACE
STAMP
HERE

FENDER MUSICAL INSTRUMENTS
1300 East Valencia
Fullerton, California 92631

Litho U.S.A. Copyright © 1971 CBS Musical Instruments
a Division of CBS Inc.

Downloaded from www.Manualslib.com manuals search engine