6ND430

Low Frequency Neo Transducer

Key Features

92,5 dB SPL 1W / 1m average sensitivity
45 mm (1,77 in) aluminum voice coil
200 W AES power handling
Neodymium motor assembly
Weather protected cone
Improved heat dissipation via unique basket design
Ideal for compact two way and multiway systems



General Description

The 6ND430 is a 6 inch neodymium woofer designed for low frequency reproduction in 2-way systems or multiway systems where both low weight and high intelligibility are required.
The speaker has been specifically designed for compact reflex enclosures where high quality low-bass and mid frequencies are required such as studio monitoring applications. It is also currently used in line array or multiway systems with excellent results.
The extremely powerful external neodymium magnet assembly assures high flux concentration, low power compression and excellent heat exchange. The levels of force factor and power handling are, as a consequence, at a top professional level with an optimum power to weight ratio.
A consistent heat transfer is guaranteed by the encapsulation of the magnetic structure in the interior of the basket, offering a large contact space between the back plate and the dissipating structure.
Particular effort was given to the surround shape and material design in order to minimise the resonances on mid range frequencies. The new design, realised with specified rubber based material density, offers a consistent dampening to typical bell modes.
The 45 mm voice coil is made from a light-weight aluminum wire and assures linearity and high power handling.
A proprietary humidity-block cone treatment makes the transducer suitable for outdoor use in adverse weather conditions. In addition, a special coating applied to both the top and back plates makes the 6ND430 far more resistant to the corrosive effects of salts and oxidization.

022068N430 8 Ohm
022066N430 16 Ohm
022064N430 4 Ohm

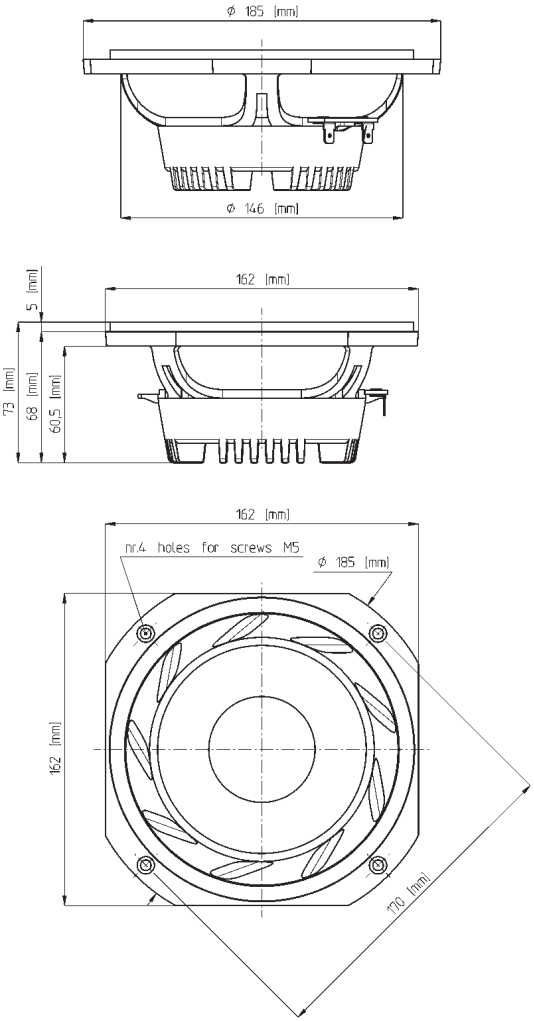

NEODYMIUM LF-MB-MF TRANSDUCERS

info@eighteensound.com
www.eighteensound.com

6ND430

Low Frequency Neo Transducer

GENERAL SPECIFICATIONS

NOMINAL DIAMETER	152mm (6 in)
RATED IMPEDANCE	8 Ohm
AES POWER	200 W
PROGRAM POWER (1)	260 W
PEAK POWER (2)	500 W
SENSITIVITY (3)	92,5 dB
FREQUENCY RANGE (4)	63 ÷ 5500 Hz
POWER COMPRESSION @-10DB (5)	1,0 dB
POWER COMPRESSION @-3DB	1,5 dB
POWER COMPRESSION @FULL POWER	2,9 dB
MAX RECOMM. FREQUENCY	3000 Hz
RECOMM. ENCLOSURE VOLUME	10 ÷ 40 lt. (0,35 ÷ 1,41 cuft)
MINIMUM IMPEDANCE	6,1 Ohm at 25°C
MAX PEAK TO PEAK EXCURSION	22 mm (0,87 in)
VOICE COIL DIAMETER	44 mm (1,75 in)
VOICE COIL WINDING MATERIAL	aluminum
SUSPENSION	Single roll, Rubber
CONE	Curvilinear, Paper

THIELE SMALL PARAMETERS (6)

Fs	61 Hz
Re	5.5 Ohm
Sd	0,0133 sq.mt. (20,6 sq.in.)
Qms	6.5
Qes	0.28
Qts	0.27
Vas	12.6 lt. (0,4 cuft)
Mms	13,3 gr. (0,03 lb)
BL	10.0 Tm
Linear Mathematical Xmax (7)	± 5 mm (±0,20 in)
Le (1kHz)	0.28 mH
Ref. Efficiency 1W@1m (half space)	92 dB

MOUNTING INFORMATIONS

Overall diameter	162 mm (6,38 in)
N. of mounting holes	4
Mounting holes diameter	5,5 mm (0,22 in)
Bolt circle diameter	170 mm (6,69 in)
Front mount baffle cutout ø	148 mm (5,38 in)
Rear mount baffle cutout ø	148 mm (5,38 in)
Total depth	73 mm (2,87 in)
Flange and gasket thickness	9,5 mm (0,37 in)
Net weight	1,25 kg (2,76 lb)
Shipping weight	1,8 kg (3,97 lb)
CardBoard Packaging dimensions	170 x 170 x 80 mm (6,69 x 6,69 x 3,15 in)

FREQUENCY RESPONSE CURVE OF 6ND430 MADE ON 18 LIT. ENCLOSURE TUNED AT 60HZ IN FREE FIELD (4PI) ENVIRONMENT. ENCLOSURE CLOSES THE REAR OF THE DRIVER. THE THIN LINE REPRESENTS 45 DEG. OFF AXIS FREQUENCY RESPONSE

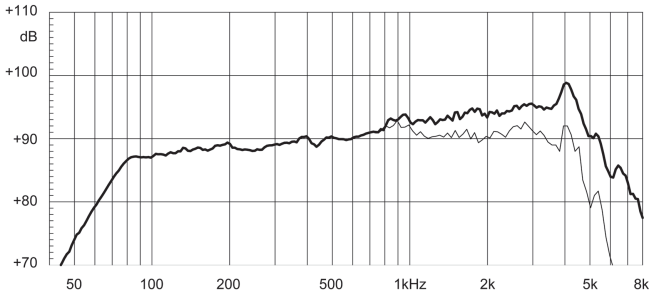

FREE AIR IMPEDANCE MAGNITUDE CURVE

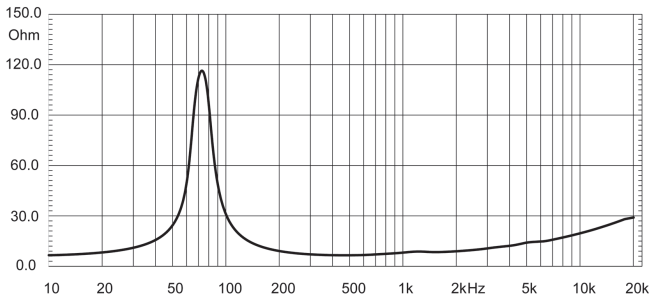

NOTES

(1) Program power rating is measured in 18 lit enclosure tuned at 60 Hz using a 70 - 3000Hz band limited pink noise test signal with 50% duty cycle, applied for 2 hours.

(2) The peak power rating represents the maximum permitted instantaneous peak power level over a maximum period of 10ms which will be withstood by the loudspeaker without damage.

(3) Sensitivity represents the averaged value of acoustic output as measured on the forward central axis of cone, at distance 1m from the baffle panel, when connected to 2,83V sine wave test signal swept between 500Hz and 2500Hz with the test specimen mounted in the same enclosure as given for (1) above.

(4) Frequency range is given as the band of frequencies delineated by the lower and upper limits where the output level drops by 10 dB below the rated sensitivity in half space environment.

(5) Power compression represents the loss of sensitivity for the specified power, measured from 100-1000 Hz, after a 5 min pink noise preconditioning test at the specified power.

(6) Thiele - Small parameters are measured after the test specimen has been conditioned by 200 W AES power and represent the expected long term parameters after a short period of use.

(7) Linear Math. Xmax is calculated as (Hvc-Hg)/2 + Hg/4 where Hvc is the coil depth and Hg is the gap depth.

Eighteen Sound engages in research and product improvement. New materials and design refinements can be introduced into existing products without notice.