SYLVANIA engineering data service 5719

MECHANICAL DATA

Bulb	T-3
Base	E8-10, Subminiature Button Flexible Leads
Outline	JETEC 3-1
Basing	8DK
Cathode	Coated Unipotential
Mounting Position	Any

RATINGS[1] (Absolute Maximum)

Impact Acceleration	450 G
Uniform Acceleration	1000 G
Fatigue (Vibrational Acceleration for Extended Periods)	2.5 G
Bulb Temperature	220° C
Altitude[2]	80000 Ft.

ELECTRICAL DATA

HEATER CHARACTERISTICS

	Min.	Bogey	Max.	
Heater Voltage[3]	6.0	6.3	6.6	V
Heater Current		150		mA

DIRECT INTERELECTRODE CAPACITANCES

	Shielded[4]	Unshielded
Grid to Plate	0.8	0.8 μμf
Input	1.9	1.7 μμf
Output	2.2	0.6 μμf

RATINGS[1 & 5] (Absolute Maximum)

Plate Voltage	165 Vdc
Peak Plate Forward Voltage[6]	330 v
Plate Dissipation	0.55 W
Plate Current	3.3 mAdc
DC Grid Voltage	
Positive Value	0 Vdc
Negative Value	55 Vdc
Heater-Cathode Voltage	
Heater Positive with Respect to Cathode	200 v
Heater Negative with Respect to Cathode	200 v
Grid Circuit Resistance	1.2 Meg

CHARACTERISTICS

Plate Voltage	100	150 Vdc
Cathode Resistor	1500	680 Ohms
Plate Current	0.73	1.85 mAdc
Amplification Factor	70	70
Transconductance	1700	2300 μmhos
Grid Voltage for Ib = 50 μAdc Max.	−2.5	−3.8 Vdc

NOTES:

1. *Limitations beyond which normal tube performance and tube life may be impaired.*
2. *If altitude rating is exceeded, reduction of instantaneous voltages (Ef excluded) may be required.*
3. *Tube life and reliability of performance are directly related to the degree of regulation of the heater voltage to its center rated value of 6.3 volts.*
4. *External shield of 0.405 inch diameter connected to cathode.*
5. *Values shown are as registered with RETMA.*
6. *Per MIL-E-1C par. 6.5 and General Section of this Sylvania Subminiature Tube Manual titled Specifications and Ratings.*

QUICK REFERENCE DATA

The Premium Subminiature Type 5719 is a high mu triode designed for use in low level audio applications. It is intended for service under conditions of severe shock, vibration, high temperature and high altitude and is manufactured and inspected to meet the applicable MIL-E-1 specification for reliable operation.

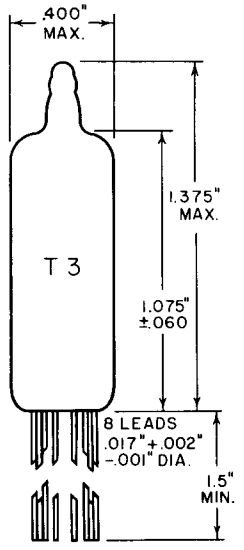

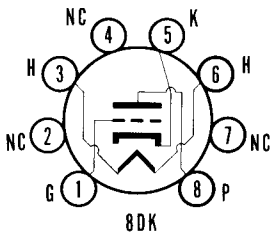

SYLVANIA ELECTRIC PRODUCTS INC.

RADIO TUBE DIVISION
EMPORIUM, PA.

Prepared and Released By The
TECHNICAL PUBLICATIONS SECTION
EMPORIUM, PENNSYLVANIA

FEBRUARY 1957

ACCEPTANCE CRITERIA

Test Conditions

Heater Voltage	6.3 V	Heater-Cathode Voltage MIL-E-1 Par. 3.2.2.1	0 V
Plate Voltage	100 Vdc	Cathode Resistor MIL-E-1 Par. 3.2.2.1	1500 Ohms
Grid Voltage	0 V		

For the purposes of inspection, use applicable reliable paragraphs of MIL-E-1 and Inspection Instructions for Electron Tubes

MIL-E-1 Ref.	Test	AQL (%)	Limits					Units
			Min.	LAL	Bogey	UAL	Max.	
Measurements Acceptance Tests, Part 1, Note 1								
4.1.1.7	(Method A)							
4.10.8	Heater Current: ALD = 12	—	—	144	150	156	—	mA
4.10.8	Heater Current:	0.65	140	—	—	—	160	mA
4.10.15	Heater-Cathode Leakage:	0.65	—	—	—	—	—	
	Ehk = +100 Vdc	—	—	—	—	—	5.0	μAdc
	Ehk = −100 Vdc	—	—	—	—	—	5.0	μAdc
4.10.6.1	Grid Current: Eb = 150 Vdc; Rk = 2700 Ohms; Rg = 1.0 Meg	0.65	0	—	—	—	−0.3	μAdc
4.10.4.1	Plate Current (1):	0.65	0.50	—	—	—	0.90	mAdc
4.10.4.1	Plate Current (2): Ec = −2.5 Vdc	0.65	—	—	—	—	50	μAdc
4.1.1.7	(Method A)							
4.10.9	Transconductance (1): ALD = 350 Sm	—	—	1550	1700	1850	—	μmhos
4.10.9	Transconductance (1): Sm	0.65	1400	—	—	—	2000	μmhos
4.7.5	Continuity and Shorts (Inoperatives):	0.4	—	—	—	—	—	
4.9.1	Mechanical: Envelope (8-1)	—	—	—	—	—	—	
Measurements Acceptance Tests, Part 2								
4.8.2	Insulation of Electrodes:	2.5	—	—	—	—	—	
	g-all	—	100	—	—	—	—	Meg
	p-all	—	100	—	—	—	—	Meg
4.10.4.1	Plate Current (3): Ec = −1.8 Vdc	2.5	5	—	—	—	—	μAdc
4.10.9	Transconductance (2): $\frac{\Delta Sm}{\Delta Ef}$ Ef = 5.7 V	2.5	—	—	—	—	10	%
4.10.6.2	Grid Emission: Note 4 Ef = 7.5 V; Ec = −2.5 Vdc; Rg = 1.0 Meg	2.5	0	—	—	—	−0.3	μAdc
4.10.3.2	AF Noise: Esig = 45 mVac; Rg = 1.0 Meg; Rk = 1500 Ohms; Rp = 0.2 Meg; Ck = 1000 μf	2.5	—	—	—	—	16	VU
4.10.11.1	Amplification Factor:	6.5	60	—	70	—	80	
4.10.11.2	AC Amplification: Ebb = 100 Vdc; Ecc = O V; Esig = 0.2 Vac; Rk = 0 Ohms	6.5	8.0	—	—	—	—	Vac
4.10.14	Capacitance:	6.5	—	—	—	—	—	
	No Shield Cgp	—	0.6	—	—	—	1.0	μμf
	No Shield Cin	—	1.2	—	—	—	2.2	μμf
	No Shield Cout	—	0.4	—	—	—	0.8	μμf
4.9.12.1	Low Pressure Voltage Breakdown: Pressure = 20 ±5 mm Hg.; Voltage = 300 Vac	6.5	—	—	—	—	—	

ACCEPTANCE CRITERIA (Continued)

MIL-E-1 Ref.	Test	AQL (%)	Limits Min.	LAL	Bogey	UAL	Max.	Units
Measurements Acceptance Tests, Part 2 (Continued)								
4.9.20.3	Vibration (1): No Voltages; Post Shock and Fatigue Test End Points Apply	10.0	—	—	—	—	—	
4.9.19.1	Vibration (2): Rp = 10,000 Ohms; Ck = 1000 μf; F = 40 cps; G = 15	2.5	—	—	—	—	25	mVac
4.9.19.1	White Noise: Note 5; Rp = 10,000 Ohms; Ck = 1000 μf; Peak Acceleration = 15 G	2.5 2.5	— —	— —	— —	— —	40 5	mv pk-pk mVac
Degradation Rate Acceptance Tests, Note 2								
4.9.5.3	Subminiature Lead Fatigue:	2.5	4	—	—	—	—	arcs
4.9.20.5	Shock: Hammer Angle = 30°; Ehk = +100 Vdc; Rg = 0.1 Meg	20	—	—	—	—	—	
4.9.20.6	Fatigue: G = 2.5; Fixed Frequency; F = 25 min., 60 max.	6.5	—	—	—	—	—	
- - - -	Post Shock and Fatigue Test End Points: Vibration (2) Heater-Cathode Leakage Ehk = +100 Vdc Ehk = -100 Vdc Change in Transconductance (1) of Individual Tubes Δ_t Sm	— — — —	— — — —	— — — —	— — — —	— — — —	100 15 15 15	mVac μAdc μAdc %
4.9.6.3	Glass Strain:	6.5	—	—	—	—	—	

MIL-E-1 Ref.	Test	AQL (%)	Allowable Defectives per Characteristic 1st Sample	Combined Samples	Limits Min.	Max.	Units
Acceptance Life Tests, Note 2							
4.11.7	Heater Cycling Life Test: Ef = 7.0 V; 1 min. on, 4 min. off; Ehk = 140 Vac; Eb = Ec = O V	2.5	—	—	—	—	
4.11.3.1	Stability Life Test: (1 Hour) Eb = 150 Vdc; Ehk = +200 Vdc; Rg = 1.0 Meg; Rk = 680 Ohms; TA = Room	1.0	—	—	—	—	
4.11.4	Stability Life Test End Points: Change in Transconductance (1) of Individual Tubes Δ_t Sm	—	—	—	—	10	%
4.11.3.1 4.11.3.1.1	Survival Rate Life Test: (100 Hours) Stability Life Test Conditions or Equivalent; TA = Room	—	—	—	—	—	
4.11.4	Survival Rate Life Test End Points: Continuity and Shorts (Inoperatives) Transconductance (1) Sm	0.65 1.0	— —	— —	— 1200	— —	 μmhos
4.11.5 4.11.3.1	Intermittent Life Test: Note 3 Stability Life Test Conditions; T Envelope = +220°C min.; 1000 Hour Requirements Do Not Apply	—	—	—	—	—	

ACCEPTANCE CRITERIA (Continued)

MIL-E-1 Ref.	Test	AQL (%)	Allowable Defectives per Characteristic		Limits		Units
			1st Sample	Combined Samples	Min.	Max.	
Acceptance Life Tests, Note 2 (Continued)							
4.11.4 4.11.3.1	Intermittent Life Test End Points: (500 Hours)						
	Inoperatives	—	1	3	—	—	
	Grid Current	—	1	3	0	-0.6	μAdc
	Heater Current	—	2	5	138	164	mA
	Change in Transconductance (1) of Individual Tubes $\triangle \frac{Sm}{t}$	—	1	3	—	20	%
	Transconductance (2) $\triangle \frac{Sm}{Ef}$	—	2	5	—	15	%
	Heater-Cathode Leakage	—	2	5	—	—	
	Ehk = +100 Vdc	—	—	—	—	10	μAdc
	Ehk = -100 Vdc	—	—	—	—	10	μAdc
	Insulation of Electrodes	—	2	5	—	—	
	g-all	—	—	—	25	—	Meg
	p-all	—	—	—	25	—	Meg
	Transconductance (1) Average Change, Avg $\triangle \frac{Sm}{t}$	—	—	—	—	15	%
	Total Defectives	—	4	8	—	—	

ACCEPTANCE CRITERIA NOTES:

1: The AQL for the combined defectives for attributes in Measurements Acceptance Tests, Part 1, excluding inoperatives and mechanical shall be one (1) percent. A tube having one (1) or more defects shall be counted as one (1) defective.

2: Tubes subjected to the following destructive tests are not to be accepted under this specification.

4.9.5.3	Subminiature lead fatigue
4.9.20.5	Shock
4.9.20.6	Fatigue
4.11.7	Heater cycling life test
4.11.5	Intermittent life test

3: Envelope temperature is defined as the highest temperature indicated when using a thermocouple of #40 BS or smaller diameter elements welded to a ring of 0.025 inch diameter phosphor bronze placed in contact with the envelope. Envelope temperature requirement will be satisfied if a tube, having bogey Ib (±5%) under normal test conditions, is determined to operate at maximum specified temperature at any position on the life test rack.

4: Prior to this test tubes shall be preheated five (5) minutes at conditions indicated below. Test within three (3) seconds after preheating. Three-minute test is not permitted. Grid Emission shall be the last test performed on the sample selected for the Grid Emission Test.

Ef	Ec	Eb	Rk	Rg
V	Vdc	Vdc	Ohms	Meg
7.5	0	100	1500	1.0

5: The tube shall be rigidly mounted on a table vibrating such that the instantaneous values of acceleration shall constitute approximately a "White Noise" spectrum which is free from discontinuities from 100 cps to 5000 cps. The spectrum of instantaneous acceleration shall be such that each octave of bandwidth delivers 2.3 G's rms acceleration. With this the case, the rms value of acceleration for any bandwidth within the specified spectrum is equal to

$$G\ rms = 2.3\ G \sqrt{3.32 \log_{10} (f2/f1)}$$

f2 and f1 are the upper and lower frequencies, respectively, of the band under consideration. The degree of clipping of the peak accelerations shall be such that the peak value of acceleration is at least 15 G's.

The voltage (ep) produced across the resistor (Rp) as a result of vibration shall be coupled through a compensating amplifier to a low pass filter. The compensating amplifier shall have a high input impedance (0.25 megohm or more) and shall be adjusted to compensate for any insertion losses in the filter. The combined frequency response of amplifier and filter shall be flat within ±0.5 db from 50 cps to 8000 cps, shall be down no more than 5 db at 10,000 cps and at 20 cps, and down at least 40 db at 13,000 cps. For reading the peak to peak value of output voltage the filter output shall be fed directly to the input of a Ballantine Model 305 peak to peak electronic voltmeter or equal, while the rms value shall be measured with a Hewlett-Packard Model 400C or equal.

APPLICATION DATA

The Sylvania Premium Subminiature Type 5719 is a high mu triode designed for operation under conditions of severe vibration, shock, high temperature and high altitude. The 5719 is manufactured and inspected to meet the applicable MIL-E-1 specification.

This type is characterized by its high mu and low hum output resulting from incorporation of a folded coiled heater. These features make the tube particularly useful in low level audio applications.

Resistance coupled amplifier data is shown for both self bias operation and zero bias operation. A voltage gain of approximately 50 is easily obtained under either condition with low distortion and low plate supply voltage. When operated under external zero bias conditions, a grid resistance of from 5 to 10 megohms should be employed to reduce contact potential loading and provide a better plate current balance between individual tubes.

To insure correlation with actual field conditions and thereby enhance equipment reliability, vibrational noise output is controlled by the "white noise test" as shown in the acceptance criteria. Briefly, this test consists of subjecting the tubes to a white noise vibration spectrum covering the frequency band of 100 to 5000 cps at a rms level of 2.3 g's per octave and a peak level of 15 g's. Limits are shown for both peak and rms output. A further discussion of the white noise vibrational test is included in the frontal section of this manual.

Life expectancy is described by the life tests, specified on the attached pages and/or individual MIL-E-1 specifications. The actual life expectancy of the tubes in an operating circuit is affected by both the operating and environmental conditions involved. Likewise, the life tests specified indicate performance under certain operating criteria to a set of specified end points. Performance at conditions other than those specified can usually be estimated only roughly as giving better or poorer life expectancy. For further discussion of life expectancy, reference should be made to the frontal section of this manual.

When operated under conditions common to on-off control applications the tube exhibits freedom from the development of interface resistance. The heater-cathode construction is designed to withstand intermittent operation.

The information presented on this data sheet is furnished without assuming any obligation.

RESISTANCE COUPLED AMPLIFIER DATA
SELF-BIAS OPERATION

	Ebb = 100 Volts						Ebb = 200 Volts					
Rb (megohms)	0.10		0.27		0.47		0.10		0.27		0.47	
Rcf (megohms)	0.27	0.47	0.47	1.0	0.47	1.0	0.27	0.47	0.47	1.0	0.47	1.0
Rk (ohms)	2700	2700	5600	6800	10000	10000	1500	1800	3300	3900	5600	6800
Ib (ma)	0.335	0.335	0.165	0.149	0.100	0.100	0.86	0.80	0.400	0.36	0.238	0.22
Ec (volts)	-0.905	-0.905	-0.925	-1.122	-1.0	-1.0	-1.29	-1.44	-1.32	-1.403	-1.332	-1.497
Eb (volts)	66.5	66.5	55.5	59.8	53.0	53.0	114	120.0	92.0	102.8	88.0	96.5
Esig (volts, rms)	0.1	0.1	0.1	0.1	0.1	0.1	0.1	0.1	0.1	0.1	0.1	0.1
Eout (volts, rms)	3.7	3.9	4.1	4.2	3.95	4.3	4.4	4.6	4.9	5.0	4.8	5.0
Gain	37	39	41	42	39.5	43	44	46	49	50	48	50
% Distortion	2.4	2.1	2.1	1.8	2.4	1.7	0.7	0.7	0.9	0.7	0.9	0.7
Esig* (volts, rms)	0.20	0.20	0.20	0.26	0.20	0.25	0.51	0.61	0.50	0.59	0.49	0.64
Eout (volts, rms)	7.3	7.7	8.1	10.7	7.8	10.7	22.0	27.0	24.2	29.0	23.2	31.6
Gain	36.5	38.5	40.5	41.2	39.0	42.8	43.1	44.3	48.4	49.2	47.3	49.4
% Distortion	5.0	4.5	4.3	4.9	5.0	4.5	3.9	5.0	4.5	4.5	5.0	5.0

RESISTANCE COUPLED AMPLIFIER DATA
ZERO-BIAS OPERATION

	Ebb = 100 Volts						Ebb = 200 Volts					
Rb (megohms)	0.1		0.27		0.47		0.1		0.27		0.47	
Rcf (megohms)	0.27	0.47	0.47	1.0	0.47	1.0	0.27	0.47	0.47	1.0	0.47	1.0
Rk (ohms)	—	—	—	—	—	—	—	—	—	—	—	—
Ib (ma)	0.355	0.355	0.174	0.174	0.112	0.112	1.10	1.10	0.49	0.49	0.300	0.300
Ec (volts)	—	—	—	—	—	—	—	—	—	—	—	—
Eb (volts)	64.5	64.5	53.0	53.0	47.4	47.4	90.0	90.0	67.8	67.8	59.0	59.0
Esig (volts, rms)	0.1	0.1	0.1	0.1	0.1	0.1	0.1	0.1	0.1	0.1	0.1	0.1
Eout (volts, rms)	3.8	4.0	4.3	4.55	4.2	4.55	4.7	4.9	5.35	5.4	5.2	5.4
Gain	38.0	40.0	43.0	45.5	42.0	45.5	47.0	49.0	53.5	54.0	52.0	54.0
% Distortion	2.2	2.0	1.9	1.6	2.1	1.6	0.4	0.4	0.8	0.7	0.9	0.7
Esig* (volts, rms)	0.20	0.21	0.22	0.26	0.20	0.27	0.59	0.63	0.54	0.65	0.50	0.63
Eout (volts, rms)	7.25	7.9	8.95	11.0	7.9	11.3	25.0	27.7	25.8	31.5	23.5	30.5
Gain	36.2	37.6	40.6	42.4	39.5	41.8	42.4	43.9	47.7	48.5	47.0	48.4
% Distortion	5.0	4.8	4.9	4.8	4.8	5.0	4.9	5.0	4.9	5.0	5.0	4.8

* Maximum signal for 5% distortion or 1/8 microampere grid current.

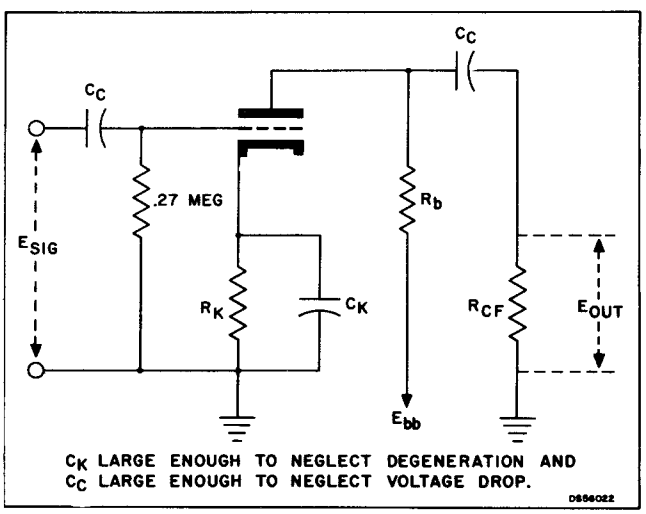

Resistance coupled amplifier circuit (Self-Bias)

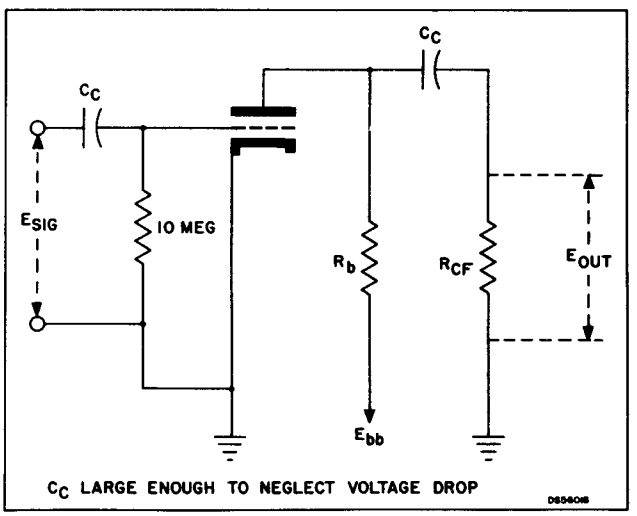

Resistance coupled amplifier circuit (Zero-Bias)

AVERAGE PLATE CHARACTERISTICS

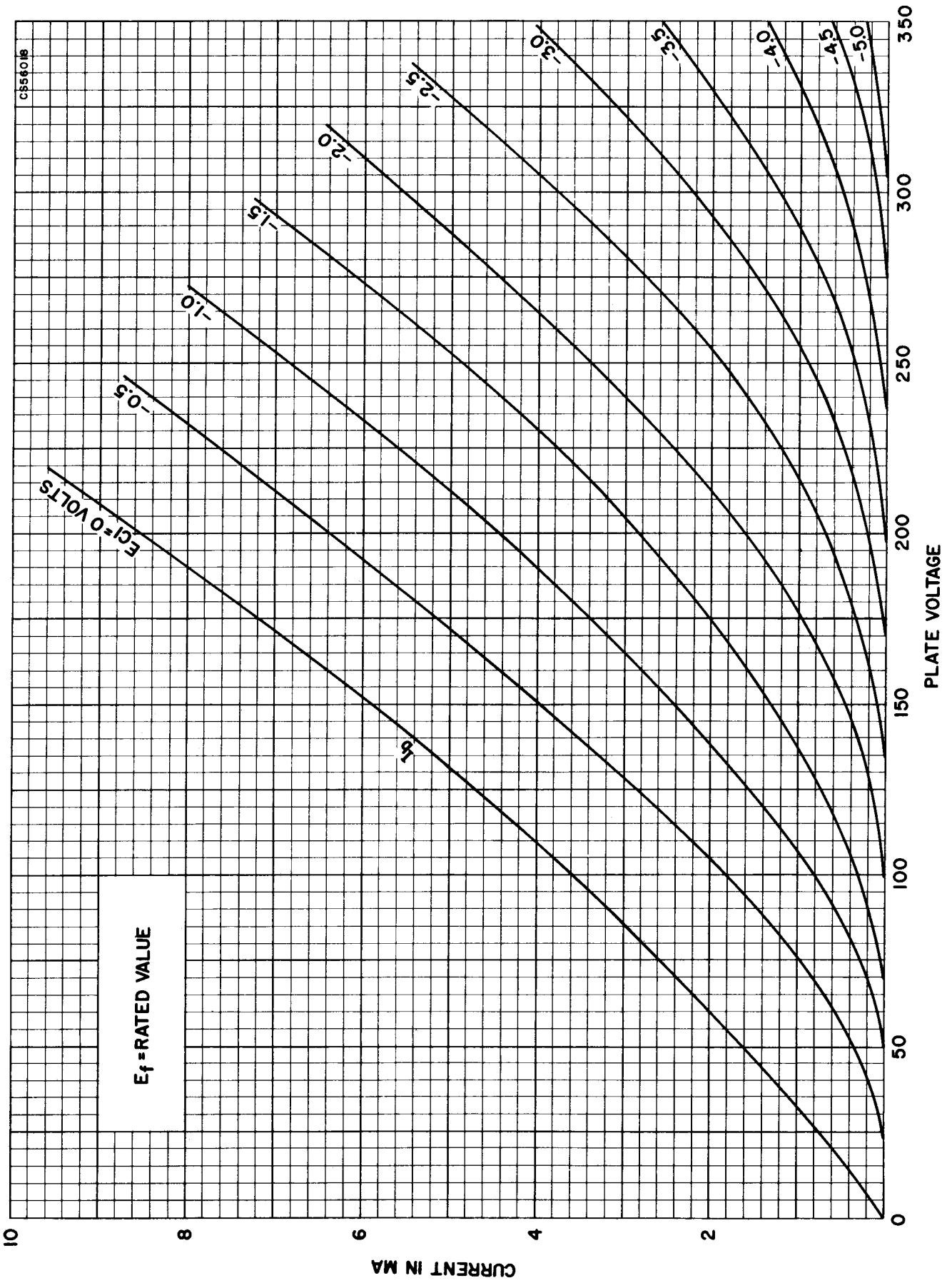

AVERAGE TRANSFER CHARACTERISTICS

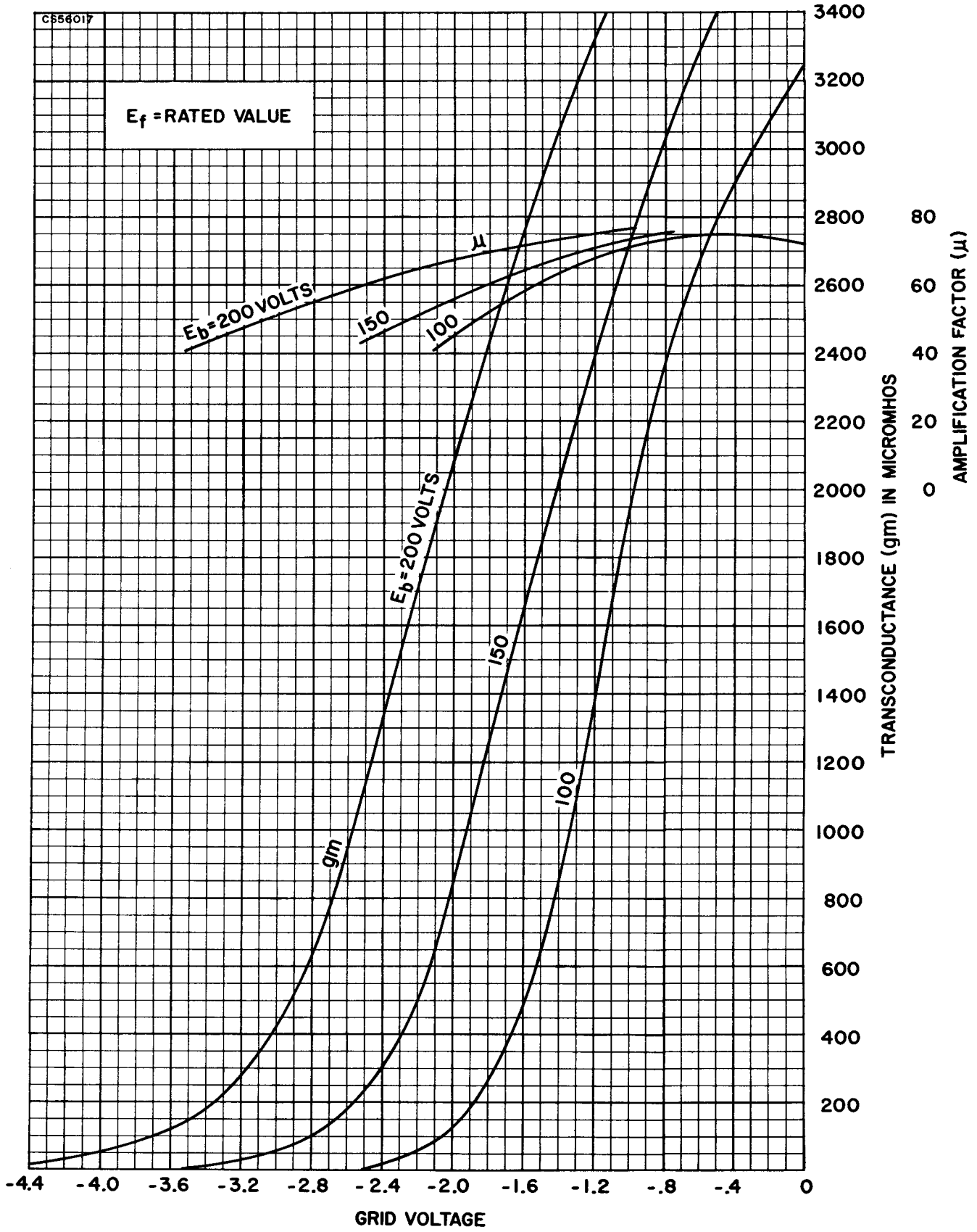

AVERAGE TRANSFER CHARACTERISTICS

