DATA SHEET

NE/SA/SE5532/5532A

Internally-compensated dual low noise operational amplifier

Product specification

1997 Sept 29

IC11 Data Handbook

Philips
Semiconductors

PHILIPS

Internally-compensated dual low noise operational amplifier

NE/SA/SE5532/5532A

DESCRIPTION

The 5532 is a dual high-performance low noise operational amplifier. Compared to most of the standard operational amplifiers, such as the 1458, it shows better noise performance, improved output drive capability and considerably higher small-signal and power bandwidths.

This makes the device especially suitable for application in high-quality and professional audio equipment, instrumentation and control circuits, and telephone channel amplifiers. The op amp is internally compensated for gains equal to one. If very low noise is of prime importance, it is recommended that the 5532A version be used because it has guaranteed noise voltage specifications.

FEATURES

- Small-signal bandwidth: 10MHz
- Output drive capability: 600Ω, $10V_{RMS}$
- Input noise voltage: $5nV/\sqrt{Hz}$ (typical)
- DC voltage gain: 50000
- AC voltage gain: 2200 at 10kHz
- Power bandwidth: 140kHz
- Slew rate: 9V/μs
- Large supply voltage range: ±3 to ±20V
- Compensated for unity gain

PIN CONFIGURATIONS

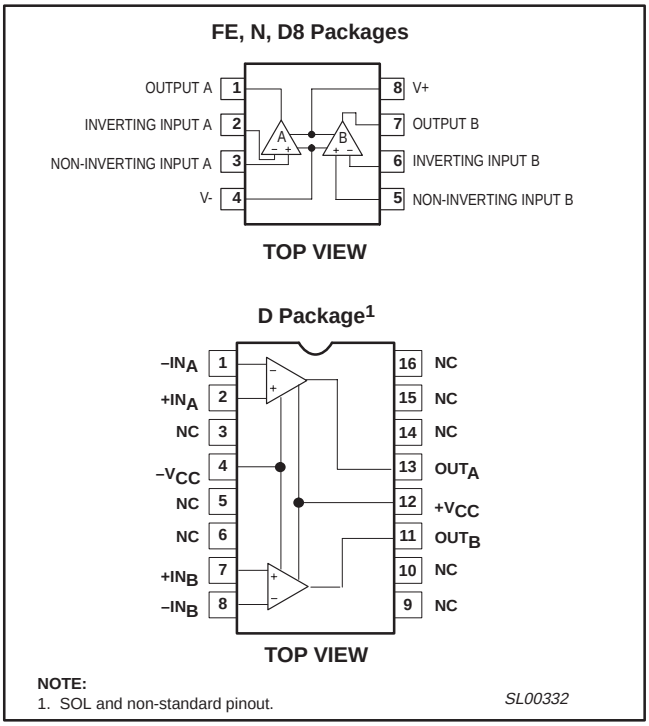

Figure 1. Pin Configurations

ORDERING INFORMATION

DESCRIPTION	TEMPERATURE RANGE	ORDER CODE	DWG #
8-Pin Plastic Dual In-Line Package (DIP)	0 to 70°C	NE5532N	SOT97-1
8-Pin Plastic Dual In-Line Package (DIP)	–40°C to +85°C	SA5532N	SOT97-1
8-Pin Plastic Dual In-Line Package (DIP)	–40°C to +85°C	SA5532AN	SOT97-1
8-Pin Ceramic Dual In-Line Package (CERDIP)	0 to 70°C	NE5532FE	0580A
8-Pin Plastic Dual In-Line Package (DIP)	0 to 70°C	NE5532AN	SOT97-1
8-Pin Ceramic Dual In-Line Package (CERDIP)	0 to 70°C	NE5532AF	0580A
8-Pin Ceramic Dual In-Line Package (CERDIP)	-55°C to +125°C	SE5532FE	0580A
8-Pin Ceramic Dual In-Line Package (CERDIP)	-55°C to +125°C	SE5532AF	0580A
8-Pin Small Outline Package (SO)	0 to 70°C	NE5532AD8	SOT96-1
8-Pin Small Outline Package (SO)	–40°C to 85°C	SA5532D8	SOT96-1
8-Pin Small Outline Package (SO)	–40°C to 85°C	SA5532AD8	SOT96-1
8-Pin Small Outline Package (SO)	-55°C to +125°C	SE5532AD8	SOT96-1
8-Pin Small Outline Package (SO)	0 to 70°C	NE5532D8	SOT96-1
8-Pin Small Outline Package (SO)	–40°C to 85°C	SA5532D8	SOT96-1
8-Pin Small Outline Package (SO)	–40°C to 85°C	SA5532AD8	SOT96-1
8-Pin Small Outline Package (SO)	-55°C to +125°C	SE5532D8	SOT96-1
16-Pin Plastic Small Outline Large (SOL) Package	0 to 70°C	NE5532D	SOT162-1
16-Pin Plastic Dual In-Line Package (DIP)	-55°C to +125°C	SE5532N	SOT38-4

EQUIVALENT SCHEMATIC (EACH AMPLIFIER)

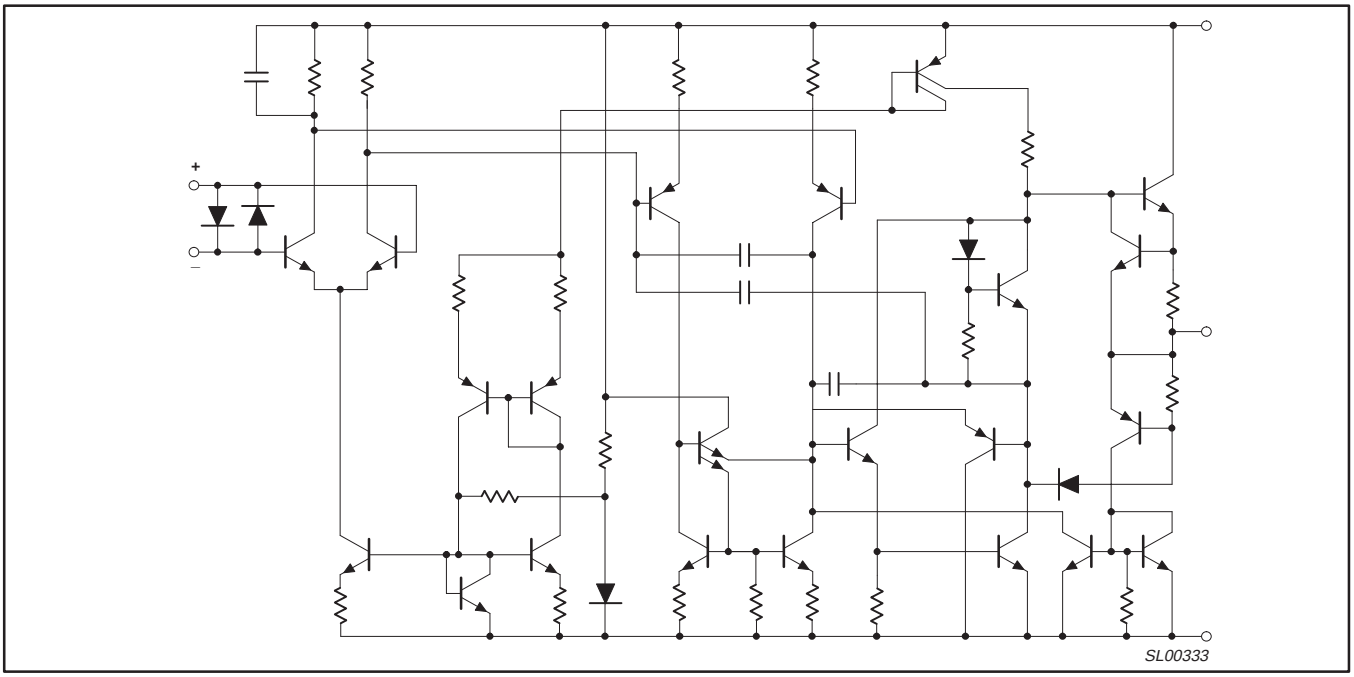

Figure 2. Equivalent Schematic (Each Amplifier)

ABSOLUTE MAXIMUM RATINGS

SYMBOL	PARAMETER	RATING	UNIT
V_S	Supply voltage	±22	V
V_{IN}	Input voltage	$\pm V_{SUPPLY}$	V
V_{DIFF}	Differential input voltage[1]	±0.5	V
T_A	Operating temperature range		
	SA5532/A	–40 to +85	°C
	NE5532/A	0 to 70	°C
	SE5532/A	-55 to +125	°C
T_{STG}	Storage temperature	-65 to +150	°C
T_J	Junction temperature	150	°C
P_D	Maximum power dissipation, T_A=25°C (still-air)[2]		
	8 D8 package	780	mW
	8 N package	1200	mW
	8 FE package	1000	mW
	16 D package	1200	mW
T_{SOLD}	Lead soldering temperature (10sec max)	300	°C

NOTES:
1. Diodes protect the inputs against over-voltage. Therefore, unless current-limiting resistors are used, large currents will flow if the differential input voltage exceeds 0.6V. Maximum current should be limited to ±10mA.
2. Thermal resistances of the above packages are as follows:
   N package at 100°C/W
   F package at 135°C/W
   D package at 105°C/W
   D8 package at 160°C/W

DC ELECTRICAL CHARACTERISTICS

T_A=25°C V_S=±15V, unless otherwise specified. [1, 2, 3]

SYMBOL	PARAMETER	TEST CONDITIONS	SE/5532/5532A			NE/SA/5532/5532A			UNIT
			Min	Typ	Max	Min	Typ	Max	
V_{OS}	Offset voltage			0.5	2		0.5	4	mV
		Over temperature			3			5	mV
$\Delta V_{OS}/\Delta T$				5			5		µV/°C
I_{OS}	Offset current				100		10	150	nA
		Over temperature			200			200	nA
$\Delta I_{OS}/\Delta T$				200			200		pA/°C
I_B	Input current			200	400		200	800	nA
		Over temperature			700			1000	nA
$\Delta I_B/\Delta T$				5			5		nA/°C
I_{CC}	Supply current			8	10.5		8	16	mA
		Over temperature			13				mA
V_{CM}	Common-mode input range		±12	±13		±12	±13		V
CMRR	Common-mode rejection ratio		80	100		70	100		dB
PSRR	Power supply rejection ratio			10	50		10	100	µV/V
A_{VOL}	Large-signal voltage gain	R_L≥2kΩ, V_O=±10V	50	100		25	100		V/mV
		Over temperature	25			15			V/mV
		R_L≥600Ω, V_O=±10V	40	50		15	50		V/mV
		Over temperature	20			10			V/mV
V_{OUT}	Output swing	R_L≥600Ω	±12	±13		±12	±13		V
		Over temperature	±10	±12		±10	±12		
		R_L≥600Ω, V_S=±18V	±15	±16		±15	±16		
		Over temperature	±12	±14		±12	±14		
		R_L≥2kΩ	±13	±13.5		±13	±13.5		
		Over temperature	±12	±12.5		±10	±12.5		
R_{IN}	Input resistance		30	300		30	300		kΩ
I_{SC}	Output short circuit current		10	38	60	10	38	60	mA

NOTES:
1. Diodes protect the inputs against overvoltage. Therefore, unless current-limiting resistors are used, large currents will flow if the differential input voltage exceeds 0.6V. Maximum current should be limited to ±10mA.
2. For operation at elevated temperature, derate packages based on the package thermal resistance.
3. Output may be shorted to ground at V_S=±15V, T_A=25°C Temperature and/or supply voltages must be limited to ensure dissipation rating is not exceeded.

AC ELECTRICAL CHARACTERISTICS

T_A=25°C V_S=±15V, unless otherwise specified.

SYMBOL	PARAMETER	TEST CONDITIONS	NE/SA/SE5532/5532A			UNIT
			Min	Typ	Max	
R_{OUT}	Output resistance	A_V=30dB Closed-loop f=10kHz, R_L=600Ω		0.3		Ω
	Overshoot	Voltage-follower V_{IN}=100mV_{P-P} C_L=100pF, R_L=600Ω		10		%
A_V	Gain	f=10kHz		2.2		V/mV
GBW	Gain bandwidth product	C_L=100pF, R_L=600Ω		10		MHz
SR	Slew rate			9		V/µs
	Power bandwidth	V_{OUT}=±10V		140		kHz
		V_{OUT}=±14V, R_L=600Ω, V_{CC}=±18V		100		kHz

ELECTRICAL CHARACTERISTICS

T_A=25°C V_S=±15V, unless otherwise specified.

SYMBOL	PARAMETER	TEST CONDITIONS	NE/SE5532			NE/SA/SE5532A			UNIT
			Min	Typ	Max	Min	Typ	Max	
V_{NOISE}	Input noise voltage	f_O=30Hz		8			8	12	nV/√Hz
		f_O=1kHz		5			5	6	nV/√Hz
I_{NOISE}	Input noise current	f_O=30Hz		2.7			2.7		pA/√Hz
		f_O=1kHz		0.7			0.7		pA/√Hz
	Channel separation	f=1kHz, R_S=5kΩ		110			110		dB

TYPICAL PERFORMANCE CHARACTERISTICS

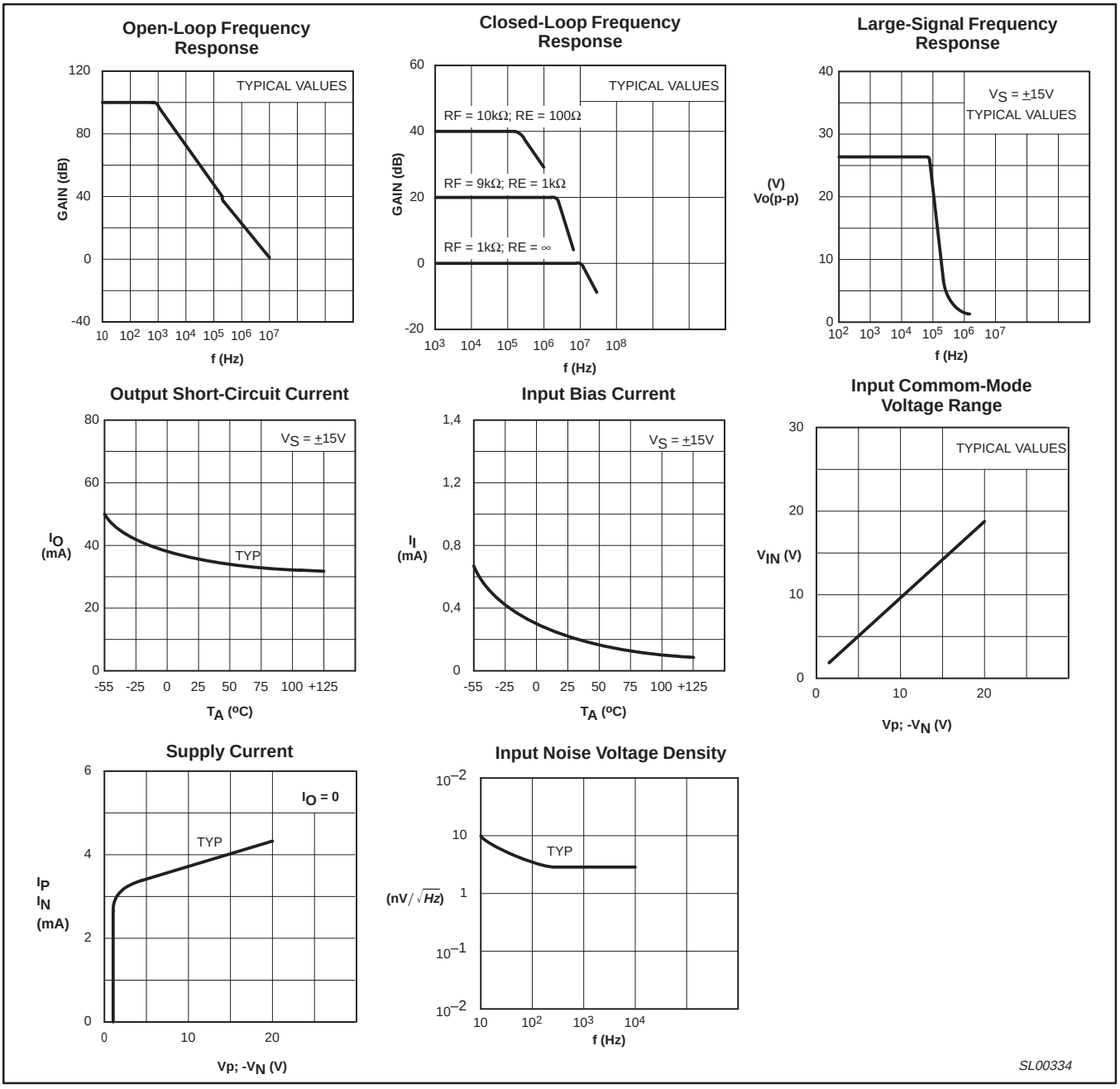

Figure 3. Typical Performance Characteristics

TEST CIRCUITS

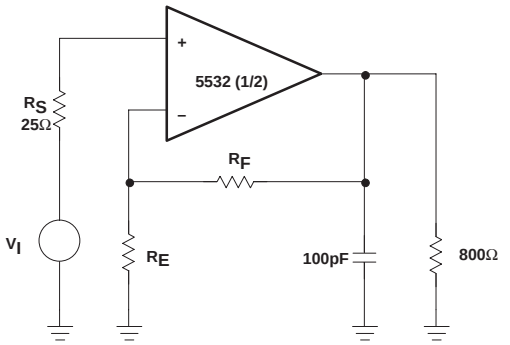

Closed-Loop Frequency Response

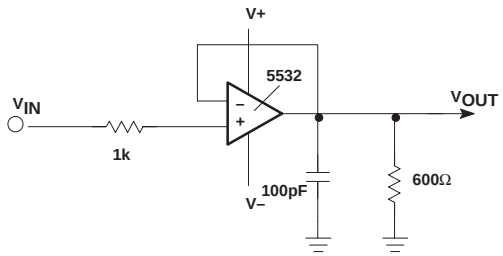

Voltage-Follower

SL00335

Figure 4. Test Circuits

DIP8: plastic dual in-line package; 8 leads (300 mil) **SOT97-1**

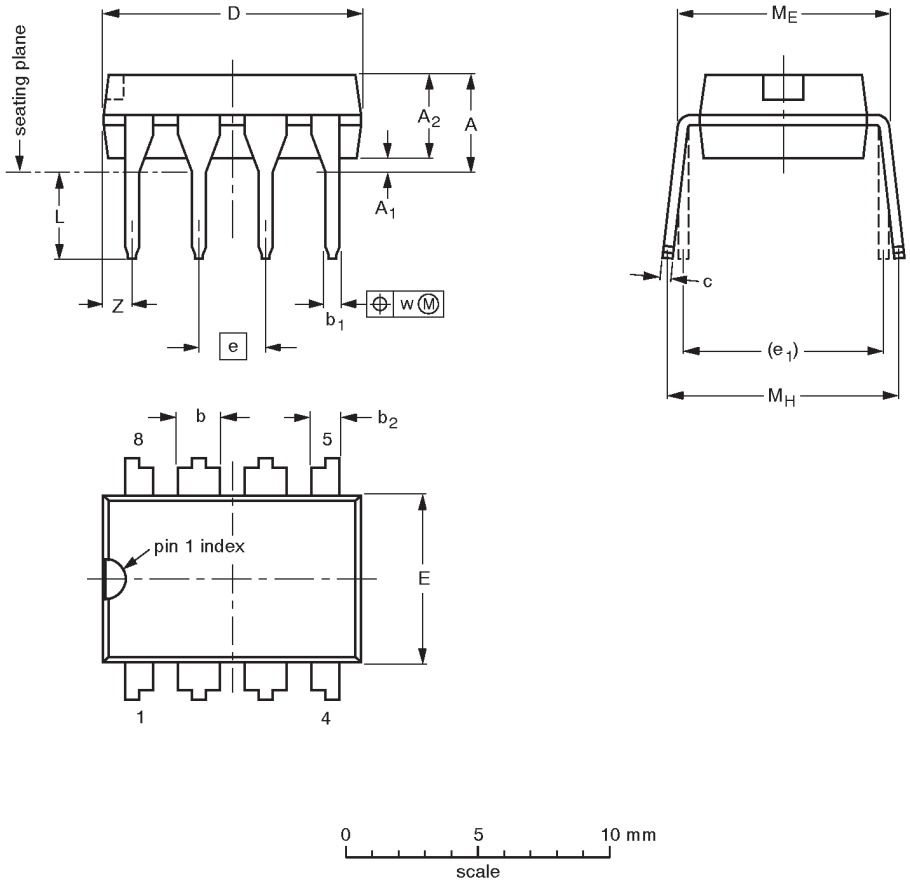

DIMENSIONS (inch dimensions are derived from the original mm dimensions)

UNIT	A max.	A_1 min.	A_2 max.	b	b_1	b_2	c	D (1)	E (1)	e	e_1	L	M_E	M_H	w	Z (1) max.
mm	4.2	0.51	3.2	1.73 1.14	0.53 0.38	1.07 0.89	0.36 0.23	9.8 9.2	6.48 6.20	2.54	7.62	3.60 3.05	8.25 7.80	10.0 8.3	0.254	1.15
inches	0.17	0.020	0.13	0.068 0.045	0.021 0.015	0.042 0.035	0.014 0.009	0.39 0.36	0.26 0.24	0.10	0.30	0.14 0.12	0.32 0.31	0.39 0.33	0.01	0.045

Note

1. Plastic or metal protrusions of 0.25 mm maximum per side are not included.

OUTLINE VERSION	REFERENCES				EUROPEAN PROJECTION	ISSUE DATE
	IEC	JEDEC	EIAJ			
SOT97-1	050G01	MO-001AN				~~92-11-17~~ 95-02-04

0580A 8-PIN (300 mils wide) CERAMIC DUAL IN-LINE (F) PACKAGE

NOTES:

1. Controlling dimension: Inches. Millimeters are shown in parentheses.
2. Dimension and tolerancing per ANSI Y14. 5M-1982.
3. "T", "D", and "E" are reference datums on the body and include allowance for glass overrun and meniscus on the seal line, and lid to base mismatch.
4. These dimensions measured with the leads constrained to be perpendicular to plane T.
5. Pin numbers start with Pin #1 and continue counterclockwise to Pin #8 when viewed from the top.

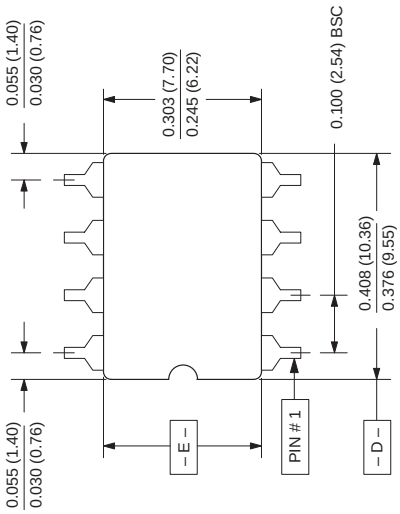

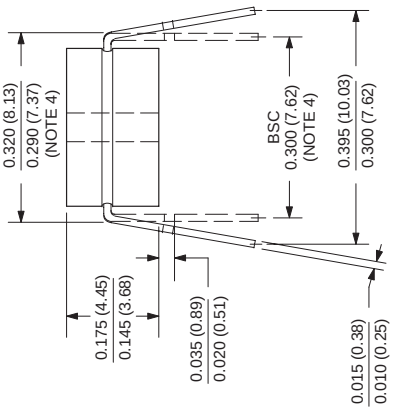

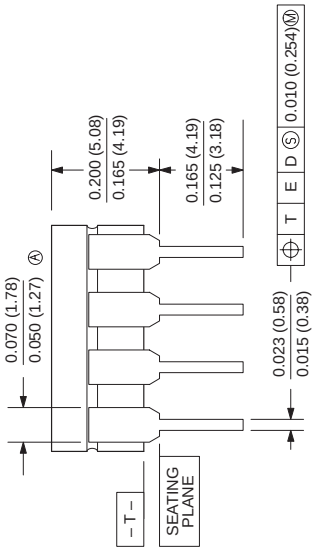

853–0580A 006688

SO8: plastic small outline package; 8 leads; body width 3.9mm SOT96-1

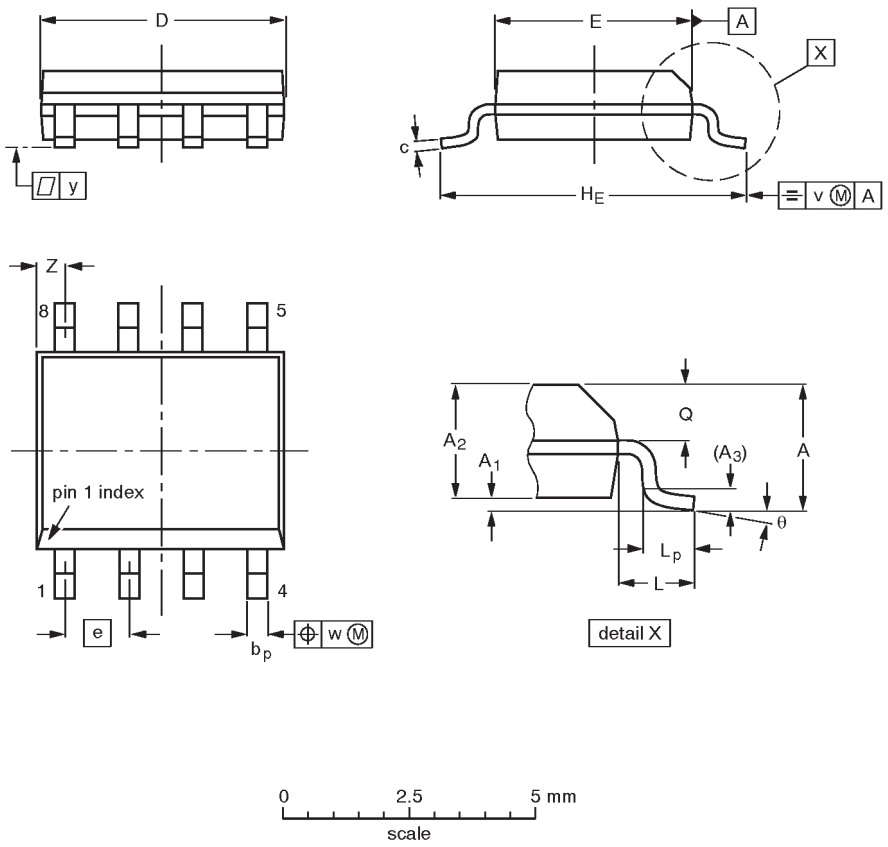

DIMENSIONS (inch dimensions are derived from the original mm dimensions)

UNIT	A max.	A_1	A_2	A_3	b_p	c	$D^{(1)}$	$E^{(2)}$	e	H_E	L	L_p	Q	v	w	y	$Z^{(1)}$	θ
mm	1.75	0.25 0.10	1.45 1.25	0.25	0.49 0.36	0.25 0.19	5.0 4.8	4.0 3.8	1.27	6.2 5.8	1.05	1.0 0.4	0.7 0.6	0.25	0.25	0.1	0.7 0.3	8° 0°
inches	0.069	0.0098 0.0039	0.057 0.049	0.01	0.019 0.014	0.0098 0.0075	0.20 0.19	0.16 0.15	0.050	0.24 0.23	0.041	0.039 0.016	0.028 0.024	0.01	0.01	0.004	0.028 0.012	

Notes

1. Plastic or metal protrusions of 0.15 mm maximum per side are not included.
2. Plastic or metal protrusions of 0.25 mm maximum per side are not included.

OUTLINE VERSION	REFERENCES				EUROPEAN PROJECTION	ISSUE DATE
	IEC	JEDEC	EIAJ			
SOT96-1	076E03S	MS-012AA				~~92-11-17~~ 95-02-04

SO16: plastic small outline package; 16 leads; body width 7.5 mm **SOT162-1**

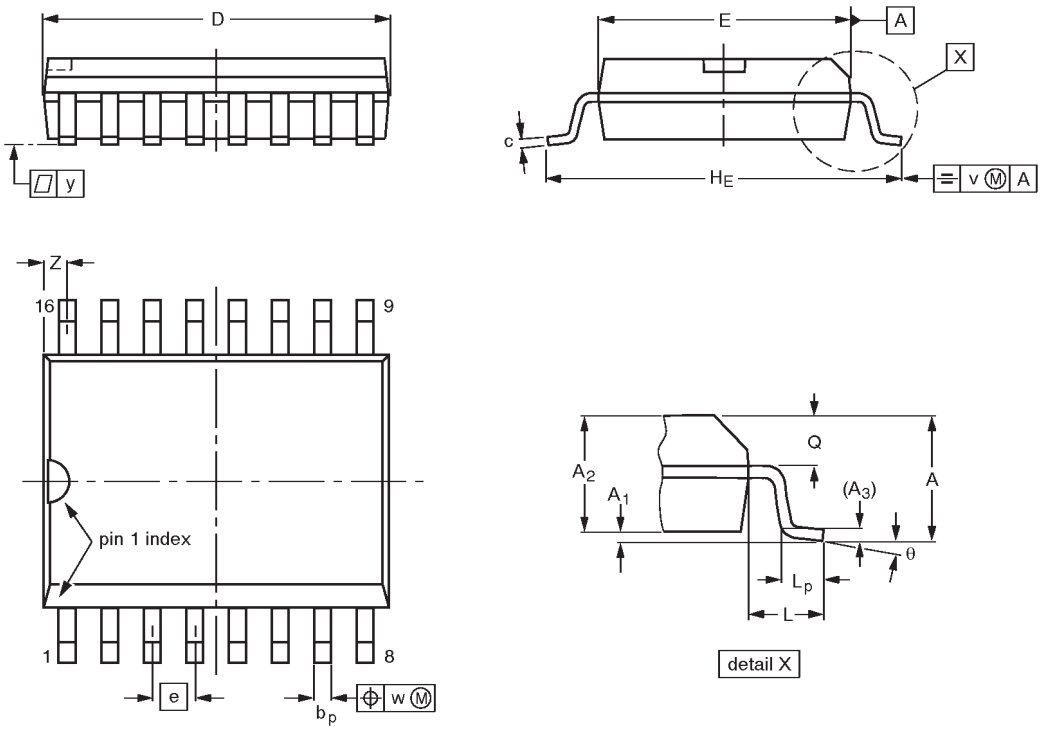

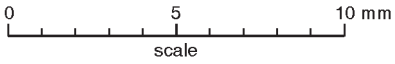

DIMENSIONS (inch dimensions are derived from the original mm dimensions)

UNIT	A max.	A_1	A_2	A_3	b_p	c	D (1)	E (1)	e	H_E	L	L_p	Q	v	w	y	Z (1)	θ
mm	2.65	0.30 0.10	2.45 2.25	0.25	0.49 0.36	0.32 0.23	10.5 10.1	7.6 7.4	1.27	10.65 10.00	1.4	1.1 0.4	1.1 1.0	0.25	0.25	0.1	0.9 0.4	8° 0°
inches	0.10	0.012 0.004	0.096 0.089	0.01	0.019 0.014	0.013 0.009	0.41 0.40	0.30 0.29	0.050	0.42 0.39	0.055	0.043 0.016	0.043 0.039	0.01	0.01	0.004	0.035 0.016	

Note

1. Plastic or metal protrusions of 0.15 mm maximum per side are not included.

OUTLINE VERSION	REFERENCES				EUROPEAN PROJECTION	ISSUE DATE
	IEC	JEDEC	EIAJ			
SOT162-1	075E03	MS-013AA				~~92-11-17~~ 95-01-24

DIP16: plastic dual in-line package; 16 leads (300 mil) **SOT38-4**

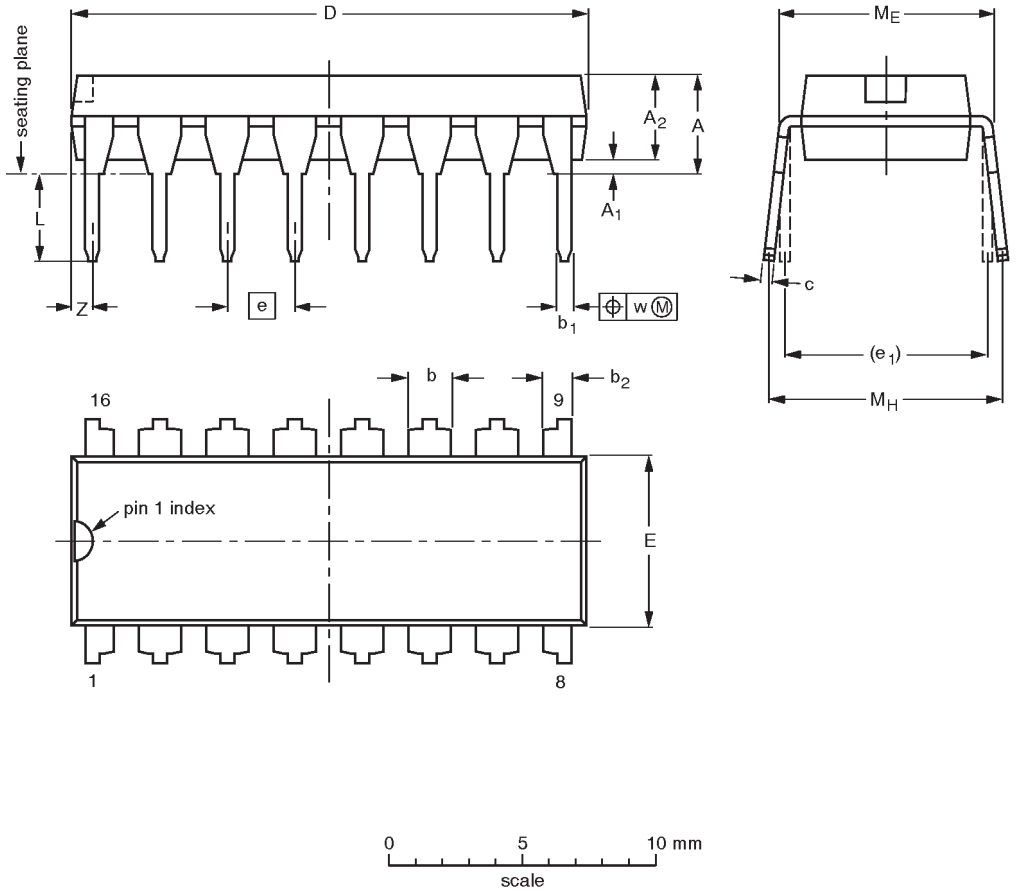

DIMENSIONS (inch dimensions are derived from the original mm dimensions)

UNIT	A max.	A_1 min.	A_2 max.	b	b_1	b_2	c	D (1)	E (1)	e	e_1	L	M_E	M_H	w	Z (1) max.
mm	4.2	0.51	3.2	1.73 1.30	0.53 0.38	1.25 0.85	0.36 0.23	19.50 18.55	6.48 6.20	2.54	7.62	3.60 3.05	8.25 7.80	10.0 8.3	0.254	0.76
inches	0.17	0.020	0.13	0.068 0.051	0.021 0.015	0.049 0.033	0.014 0.009	0.77 0.73	0.26 0.24	0.10	0.30	0.14 0.12	0.32 0.31	0.39 0.33	0.01	0.030

Note

1. Plastic or metal protrusions of 0.25 mm maximum per side are not included.

OUTLINE VERSION	REFERENCES				EUROPEAN PROJECTION	ISSUE DATE
	IEC	JEDEC	EIAJ			
SOT38-4						~~92-11-17~~ 95-01-14

Internally-compensated dual low noise operational amplifier

NE/SA/SE5532/5532A

DEFINITIONS

Data Sheet Identification	Product Status	Definition
Objective Specification	Formative or in Design	This data sheet contains the design target or goal specifications for product development. Specifications may change in any manner without notice.
Preliminary Specification	Preproduction Product	This data sheet contains preliminary data, and supplementary data will be published at a later date. Philips Semiconductors reserves the right to make changes at any time without notice in order to improve design and supply the best possible product.
Product Specification	Full Production	This data sheet contains Final Specifications. Philips Semiconductors reserves the right to make changes at any time without notice, in order to improve design and supply the best possible product.

Philips Semiconductors and Philips Electronics North America Corporation reserve the right to make changes, without notice, in the products, including circuits, standard cells, and/or software, described or contained herein in order to improve design and/or performance. Philips Semiconductors assumes no responsibility or liability for the use of any of these products, conveys no license or title under any patent, copyright, or mask work right to these products, and makes no representations or warranties that these products are free from patent, copyright, or mask work right infringement, unless otherwise specified. Applications that are described herein for any of these products are for illustrative purposes only. Philips Semiconductors makes no representation or warranty that such applications will be suitable for the specified use without further testing or modification.

LIFE SUPPORT APPLICATIONS
Philips Semiconductors and Philips Electronics North America Corporation Products are not designed for use in life support appliances, devices, or systems where malfunction of a Philips Semiconductors and Philips Electronics North America Corporation Product can reasonably be expected to result in a personal injury. Philips Semiconductors and Philips Electronics North America Corporation customers using or selling Philips Semiconductors and Philips Electronics North America Corporation Products for use in such applications do so at their own risk and agree to fully indemnify Philips Semiconductors and Philips Electronics North America Corporation for any damages resulting from such improper use or sale.

Philips Semiconductors
811 East Arques Avenue
P.O. Box 3409
Sunnyvale, California 94088–3409
Telephone 800-234-7381

© Copyright Philips Electronics North America Corporation 1997
All rights reserved. Printed in U.S.A.

print code Date of release: 04–96

Document order number: 9397 750 01699

Let's make things better.

Philips Semiconductors

PHILIPS