RFX Plug-in Update

This document describes three new Plug-ins have been developed for the RFX Card:

- **Mixer Section**
- **RFX Flanger**
- **Envelope Phaser**

☞ To Install New RFX Plug-ins:

1. Download the new RFX Plug-ins from the E-MU web site.
2. Copy the RFX Plug-ins from your computer to a DOS formatted floppy disk.
3. Insert the floppy disk into your E4 Ultra.
4. Press **Load** from the main E4 screen and select the **floppy** drive.
5. Locate the first Plug-in on the floppy and **Merge** it with the current bank. Repeat for any other Plug-ins on the floppy.
6. Press **Master**, **FX**, **RPlugin**.
7. Select one of the new Plug-ins using the data entry control. (PIXXX)
8. Press the **Copy** function key.
9. Select an empty **Flash** location for the Plug-in (pi100-pi199).
10. Press **OK**. Repeat steps 6-9 for the other new Plug-ins.
11. **Erase** the Plug-ins stored in RAM locations (PI000-PI099).

E-MU PN: FI12065 Rev. A

Mixer Section

Mixer Applications:
• Convert the Emulator's 2 stereo analog inputs to 4 mono inputs by using mixers to block the left or right channel from a bus.

• Mix stereo signals to mono

• Process control inputs for the vocoder and envelope-sensitive plug-ins.

• Pan between different stereo delay or EQ settings.

The Mixer Section Plug-in is a 2x2 stereo mixer representing 2 channels of a mixing console. The left and right inputs of the mixer have separate signal paths consisting of a switchable phase (polarity) invert, High Frequency Shelving EQ, Parametric EQ stage, Low Frequency Shelving EQ, and a Volume control adjustable from +12dB to –100dB of gain. The two signals are then input to a 2x2 panning matrix. All parameters are smoothed.

The Mixer can be operated in either "split" or "locked" modes:

- **Split mode** - There are individual parameter controls for the left and right signal paths.
- **Locked modes** - There is one set of parameter controls that set common values for the parameters of the left and right channels together while leaving their signal paths independent.

The block diagram of the Mixer Section is shown below.

Mixer Section Block Diagram

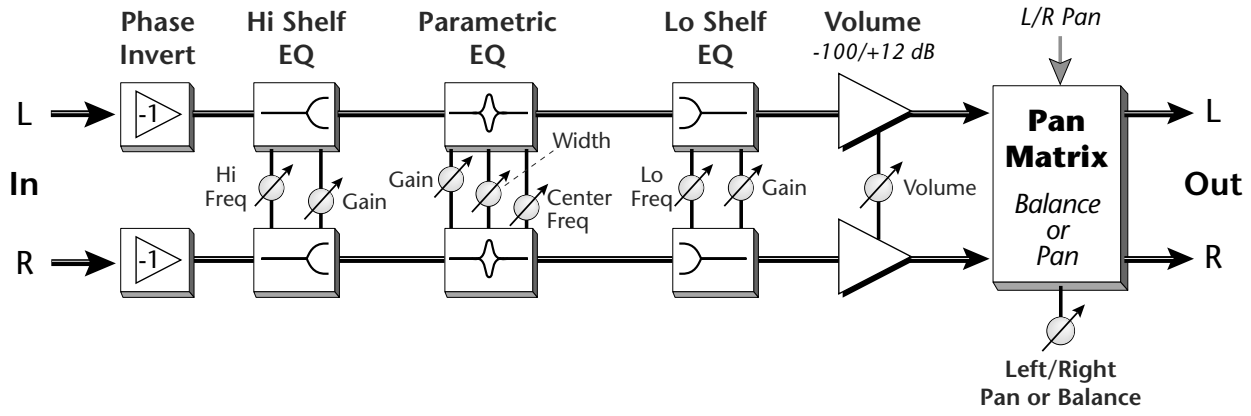

There are actually two Locked modes, which differ in the behavior of the single stereo Pan parameter:

- **Locked(Pan) mode** - Locked (Pan) mode - When turned leftward, the Pan control pans the right input signal over towards the left output channel, and when turned rightward pans the left input signal towards the right output channel. When panned Center, no panning of either signal occurs. Thus it behaves like the split L Pan control when turned to the right and the R Pan control when turned to the left.
- **Locked(Bal) mode** - The Pan control changes its name to Balance, and works like a stereo L/R balance control to vary the proportion of left to right input signals without re-routing any input signal to the opposite output. When panned fully Left, no right channel is heard, and when panned Right, no left channel is heard. Like Locked (Pan) mode, the parameter has no effect on the output when panned Center.

Mixer Section Parameters:

Please refer to the Mixer Section block diagram to better understand the effect and modulation routings. When in Split mode there are both "L" and "R" (left and right) versions of the following parameters; in Locked modes the "L" and "R" disappear, leaving parameters which work in common for both sides.

Volume Adjusts the gain of the channel from -100dB to +12dB in .1 db steps. The lowest setting of the volume control is "MUTED" (-∞ dB).

Pan In Split mode, this control pans the signal to the left or right output. In Locked (Pan) mode the control pans the right input signal over, routing it fully to the left output when turned Left, and pans the left input signal over to the right output when turned Right.

Balance This control only appears in Lock (Bal) mode. It works like a stereo L/R balance control to vary the proportion of left to right input signals without re-routing any input signal to the opposite output.



Tip: *Press the Set/Shift key to increment the frequency in 1KHz steps.*

HF Shelf Adjustable from 1kHz to 18kHz in 1Hz increments.

HF Gain Adjustable from -30dB to +30 dB in 0.1dB increments.

EQ Center Adjusts the para EQ band from 10Hz-20kHz in 1Hz steps.

EQ Width Adjusts the bandwidth of the para EQ band from 1/24th octave to 2 octaves adjustable in semitones.



Dialing in the Para EQ: *An easy way to dial in a parametric EQ is to increase the gain and narrow the bandwidth so you can really hear the effect of the EQ. Next, adjust the Center frequency control until you find the area you want to affect. Now reduce the Gain and widen the Width to give a more natural curve.*

EQ Gain Adjusts the boost/cut of the EQ band from -100dB to +50dB.

LF Shelf Adjustable from 50Hz to 1kHz in 1Hz increments.

LF Gain Adjustable from -30dB to +30 dB in 0.1dB increments.

Phase Invert Switches the polarity of the input signal. Normally this is used to correct cancellation problems caused by out of phase stereo signals. For certain effects, you may actually *want* to put a stereo signal out of phase in order to create cancellation effects using delay, phase shift or ring mod.

Modulation Parameters

There are two Modulation parameters, L Pan and R Pan, that duplicate the functions of the similarly named regular parameters. The regular and modulation parameters override each other, so the most recent update to each one "wins." When in either Locked mode, the R Pan modulation parameter is ignored and L Pan works like either Pan or Balance.

Note: In order to modulate pan completely left or right, a bipolar controller (such as a pitch wheel) MUST be used. With a unipolar MIDI controller (such as a modulation wheel) you can only pan from center to the right side.

RFX Flanger

The RFX Flanger is a true stereo sweeping flanger with an extensive modulation section and special features not found on other flanging devices. It can achieve flange delays with a combination of fixed offset and swept delays from 0 out to 80ms in .1ms increments. The flange sweep can take a number of different shapes, and its rate can be sync'd to the system tempo, tied to a MIDI-controllable LFO, or driven directly by MIDI/synth modulation.

The simplified block diagram of the RFX Flanger is shown below.

RFX Flanger Block Diagram

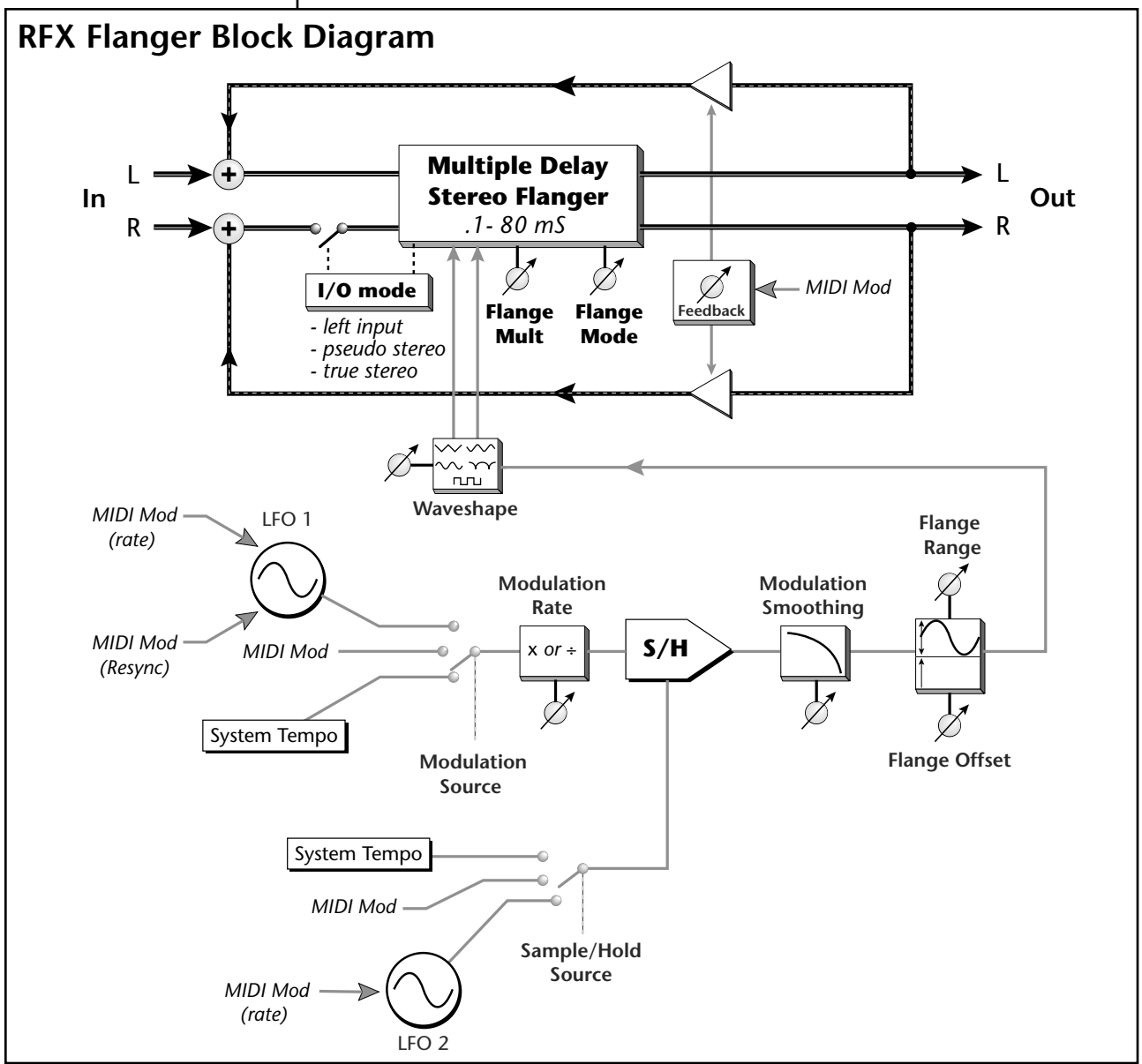

Left and right channels can use dual inverted sweeps to generate spatial modulation and stereo flanging effects. Feedback amount can be set up to 100% without loss of stability and can also be controlled by external MIDI/ synth modulation.

A flange multiplier factor can be used to tune the intensity of the effect independent of the feedback level, and a selection of flange cancellation modes are available that lend a variety of different sonic characteristics to the sound. A sample & hold is also included which can be modulated by tempo, LFO, or MIDI. The flanger can operate in mono (left input), pseudo-stereo and true stereo I/O modes.

This unique flanger is implemented using a number of internal delay lines – flanger "stages" – whose delay lengths are constantly changing in response to an oscillating modulation signal or MIDI controller. The flanging effect occurs when an undelayed signal is combined with these delayed signals, causing a cancellation that creates peaks and notches in the frequency spectrum which move with the sweeping control signal.

RFX Flanger Parameters:

Please refer to the RFX Flanger block diagram on the previous page to better understand the effect and modulation routings.

Flange Offset This is the offset, or initial delay time, to which the modulated delay sweep is added. One way to view this is as the minimum sweep delay, an interpretation that is shown in the display of the Flange Range parameter: its delay range value is dynamically redisplayed as the Flange Offset changes. The Flange Offset can be adjusted from a minimum of 0 (actually 1 sample) to 40 milliseconds.

Flange Range This parameter scales the extent of the delay sweep. It is displayed as a pair of values beginning at the Flange Offset and extending to the Offset plus the Range to show the actual delay times over which the flanger will sweep. Classic flanger effects occur when the Offset is near zero and the Range is less than 10msec. Wider Ranges and larger Offsets are more useful for to achieve "doubling" or spatial effects, and long delays coupled with high Feedback can create highly resonant robot-like sounds on vocals.



***Resync** - This MIDI control restarts the Flanger's LFOs whenever the controller value changes from zero to a positive number.*

Sweep Source This parameter allows the flanger's sweep to be driven by the internal LFO1 or directly by a MIDI controller. When this parameter is set to LFO1, the LFO frequency is set directly by the Sweep Rate parameter.

- **LFO 1 - modulation oscillator**
  Whenever the Sweep Source is set to LFO1, the LFO1 Sweep Rate modulation parameter is also active. When a MIDI controller is patched to LFO1 Sweep Rate, the

Sweep Rate parameter sets a maximum sweep rate that will be further modulated by the controller.

- **System Tempo - LFO 1 synced to Seq/Arp/MIDI clock**
  When set to System Tempo, the LFO frequency is controlled by the EOS system's internal tempo, and runs at the tempo division indicated by the Sweep Rate parameter. In this mode, the LFO1 sweep oscillator will be restarted at the beginning of its sweep whenever the EOS arpeggiator or sequencer are resynchronized. In addition, any non-zero value applied to the LFO Resync modulation parameter will also restart the sweep when LFO or System Tempo are selected as sources.
- **MIDI - MIDI CC value controls the flange delay.**
  When the Sweep Source is set to MIDI, LFO sweeping and synchronization is disabled and the flange delay is controlled directly by the Flange Delay modulation parameter. The MIDI controller (contoured by the Sweep Shape parameter) will modulate the flanger between the minimum and maximum delay times set by the Flange Range parameter. This is the only time that the Flange Delay modulation parameter is active.

The Sweep Rate parameter is inactive when the Sweep Source is set to MIDI.

Sweep Rate

This parameter is a rate multiplier or divisor for the flange sweep. When the Sweep Source is LFO1, this parameter manually sets the frequency of the internal sweep LFO1 to a tempo calibrated in beats per minute (BPM) from .25 to 1000. One complete cycle of the LFO will occur for each beat. When the Sweep Source is System Tempo, this parameter sets the multiple or submultiple of the system's internal rate to which the sweep LFO is synchronized, from a submultiple of 1/120 (one cycle per minute at a tempo of 120BPM) to a multiple of 137 (275Hz at 120BPM).

Sweep Shape

This parameter controls the shape of the modulation waveform that controls the flanger delay time. The possible sweep shapes are Triangle (linear sweep), Curved (a warped Triangle), Sine, Log (an approximately logarithmic shape which "flattens out" towards shorter delay times), or Square.

Each Sweep Shape also has a "Dual" selection. When Dual sweep shapes are selected, a 180 degree (inverted) copy of the normal LFO waveform is applied to alternate stages of the flanger. Thus in Mono/Stereo and Stereo I/O modes, the right output channel flanging is out of phase with respect to the left channel, which creates dramatic stereo spatial effects. In Mono I/O mode, this inverted LFO phase is only applied to

internal flanging stages when the Flange Mult parameter is set greater than x1, and creates a warbling or phasing effect on the output.

When the Sweep Source is set to MIDI, the Sweep Shape parameter still controls the shape of the mapping between the MIDI modulation value and the flanger delay and whether the flanger is in Dual mode. Selecting different Sweep Shapes in this mode can help tune the MIDI controller contour to maximize its 'playability'.

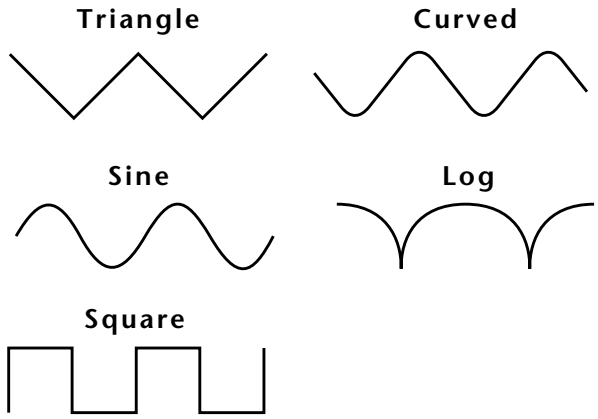

MIDI Controls
Wet/Dry Mix
FX Input Level
FX Output Level
Flange Delay
LFO1 Sweep Rate
LFO2 S/H Rate
S/H Trigger
LFO Resync
Feedback

Feedback

Feedback increases the depth of the cancellation notches and generally intensifies the flange effect. This parameter controls the amount of flanged signal which is recirculated through each stage of the flanger, from 0 to 100%. It also sets the maximum feedback level which is further modulated by the Feedback Modulation parameter.

Use extra caution with your sound system and hearing when operating the RFX Flanger at high feedback levels.

While the flanger is stable up to 100% feedback, it is still possible to produce clipping within the flanging stages and high output levels when the feedback level approaches 100%. The amount of throughput gain can also vary greatly depending on which Flange Mult values and Flange Mode cancellation types are selected, and where the LFO is in its sweep.

Many interesting tonalities such as bell tones, log drums, resonant pipes, robot voices, and plucked string sounds can be produced using high feedback values.

Flange Mult

This parameter controls a "multiplier factor" for the flanger, changing the number and patterns of cancellations produced by the different flanger stages. The sonic result of different multiplier values is difficult to describe, but the general effect is to intensify the flanging at higher values of the Flange Mult parameter.

Note that the various "alternate" cancellation modes set by the Flange Mode parameter will generally not be perceptible until the Flange Mult parameter is greater than 1 and more flanging stages are employed. Variations of the Flange Mult and Flange Mode parameters can create a wide variety of different flanging sounds. The exact effect of the Flange Mult parameter depends greatly on the I/O mode selected.

- **In Mono I/O mode**, the Flange Mult parameter controls the number of flange stages used in series between the input and output. To hear the effect of Dual sweep shapes, the Flange Mult value must be greater than 1 when in Mono mode.
- **In Mono/Stereo & Stereo I/O modes**, the Flange Mult parameter controls the number of stages as well as the notch patterns produced by the flanger. Again, higher multiplier values produce more "extreme" effects. Dual sweep shapes are always applied in these Stereo output modes, regardless of the Flange Mult value.

Flange Mode

This parameter controls the type of cancellation produced at the various stages of the flanger. In conjunction with the Flange Mult parameter, it can produce widely varying flanging effects. When set to Positive, all flanging stages use positive cancellation, producing a "rounded" flanging sound; when set Negative, using all negative cancellation produces a more "hollow" effect.

When set to parameter values from "Alt 1" through "Alt 6", various patterns of alternating polarities are applied to different stages of the flanger. Note that these different patterns may or may not be perceptible until higher values of the Flange Mult parameters are used and additional flanging stages are employed.

In "Delay Only" mode the Wet/Dry Mix control can be used to manually control the amount of flanging.

Flange cancellation is eliminated entirely when the Flange Mode is set to Delay Only. In this mode the input signals are processed straight through the flanger delay lines without encountering the spectral effects of cancellation with undelayed signals. *(Note that the pitch shift produced by the sweeping delays and the shifting resonances produced by high feedback values will still be heard.)* When used in Stereo output modes, this Flange Mode setting is useful for producing subtle spatial effects at low delay ranges and "double tracking" effects at higher delay ranges. Because the flange stages are connected in series, the effects of the Delay Only setting may be difficult to hear in Mono mode.

I/O Mode The three I/O modes control the input/output configuration of the flanger:

- **Mono** - In this mode, only the left channel input signal is processed. All the flange stages are used in series to produce a single effect signal, which is fed equally to both left and right outputs.
- **Mono/Stereo** - In this mode, a pseudo-stereo output is produced by processing only the left input channel. Multiple flange stages with slightly different characteristics produce distinct left and right output signals which create a wide stereo panorama.
- **Stereo** - In this mode, the RFX Flanger operates as a true stereo flanger: left and right input channels are processed separately to produce distinct left and right outputs. The processing applied to each channel is the same until higher Flange Mult values and alternating cancellation Flange Modes are encountered, or until Dual sweeps are used to create inverted flange sweeps between outputs.

Sweep Smoothing This parameter applies varying amounts of smoothing to the sweep control signal after it has been shaped and before it is applied to control the delay lines.



Sweep Smoothing values greater than 0 may not be particularly useful until using the Log or Square sweep shapes, which have sharp transitions that can benefit from some smoothing.

The main utility of the Sweep Smoothing is for smoothing the transitions between flange offsets produced by the flanger's internal Sample & Hold.

Sweep Smoothing is also applied to the flange offsets set directly by the Flange Delay modulation parameter. In this case it can be very useful for smoothing jittery input from MIDI controllers or limiting the amount of pitch-shift applied to the signal during radical modulation changes.

Samp/Hold Source A sample and hold can be inserted into the modulation path or turned off. This parameter selects the clock source for the sample and hold. See "Background: Sample & Hold" in the RFX operation manual for more information.

- **Off** - Modulation signal bypasses the Sample & Hold.
- **LFO 2** - an oscillator with a range of .25 to 980 bpm.
- **System Tempo** - LFO 2 synced to Seq/Arp/MIDI clock
- **MIDI** - Any time the MIDI CC value *(connected via "Edit Modulation" in the Setup Edit screen)* changes and is a number greater than 0, the input to the S & H is sampled and held on its output. At values below 1, the input is passed unchanged.

Envelope Phaser

The Envelope Phaser is very similar to the RFX Phaser plug in, except that the modulation section has been replaced with a very flexible envelope follower. The envelope follower tracks the amplitude of the signal and converts it to a signal that is applied to the phaser's phase shift input. Extensive control over the parameters of the envelope follower allow it to be carefully tailored to a wide variety of input signals in order to achieve an equally wide range of sonic results. The Plug-in can perform "self-modulation" on the audio signal or can respond to the envelope of a "sidechain" input for cross-modulation effects.

The block diagram of the Envelope Phaser is shown below.

Envelope Phaser Block

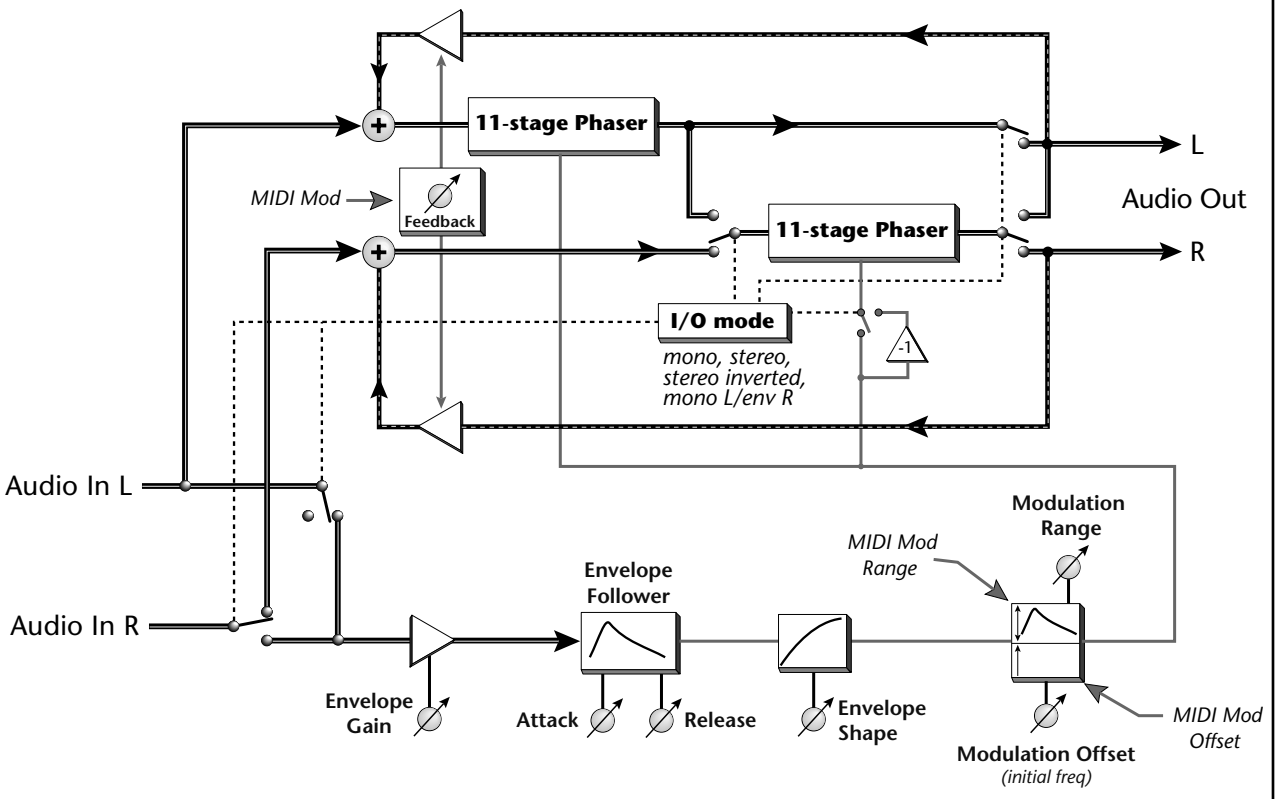

Most parameters are 'unitless', which implies that to achieve a particular effect, the plug-in must be tuned by ear to a particular input signal, rather than analytically. Experimentation, especially with the Mod Range, Env Attack, Env Release and Env Shape parameters, is necessary in order to explore the wide range of sonic effects.

The Envelope Phaser itself is composed of two separate phase shifter sections. It can be configured either as a true stereo phase shifter with completely separate signal paths on each channel or a mono phase shifter using only the left channel for its audio input.

A phase shifter creates a series notches in the audio spectrum similar to, but sounding very different than, an audio flanger. A phase shifter's notch spacing remains constant with frequency, unlike a flanger where the notch spacing is a harmonically related function of delay time. Feedback is used to increase the depth of the notches and intensify the phase shift effect.

In "inverted stereo mode" the Envelope Phaser is configured in true stereo but with the envelope follower output inverted on the right channel. This causes the peaks and notches on the left and right channels to be swept in opposite directions.

MIDI continuous controllers can be used to control various parameters such as Modulation Offset, Modulation Range and Feedback.

Envelope Phaser Parameters:

Please refer to the Envelope Phaser block diagram on the previous page to better understand the effect and modulation routings.

Mod Offset This parameter sets a fixed degree of phase shift that is added to the Range-scaled envelope before applying it to the phase shifter. The difference from the RFX Phaser is that this offset also sets a maximum offset amount which is further modulated by the Mod Offset MIDI modulation input.

Mod Range This is similar to the Mod Range control on the RFX Phaser, controlling the overall extent of phase shift that is affected by the signal envelope. The difference is that it now incorporates a negative range, varying from –100% to 100%. By using a large Mod Offset value and a negative Mod Range, the relationship between the signal envelope and the degree of phase is inverted. This parameter also sets the maximum amount to be modulated by the Mod Range MIDI modulation input.

Envelope Gain This is a gain control on the envelope input preceding the envelope follower itself. Use it to adjust the level of the input signal to achieve optimum excursion of the envelope follower across the full range of phase shifting (as scaled by Mod Range.)

Positive gain applied here can be used to compensate for low level signals, and can also be used to intentionally "peg" the envelope to the maximum phase shift except on the lowest possible input levels; clipping of the envelope signal does not affect the quality of the audio signal path. Negative gain can also be used to reduce the envelope follower response.

In current EOS releases (as of 4.61) the Emulator front panel master volume control is applied before the RFX board, and will affect how the envelope follower reacts

to input signals. Env Gain can thus be used to make-up for less-than-full-scale settings of the master volume control.

Envelope Attack This unit-less parameter sets the attack rate of the envelope follower, controlling how quickly it responds to increasing signal levels. It can be varied from the slowest setting, which is nearly a signal "hold", to the fastest setting of 30, which is essentially an instantaneous response. Typically useful values are in the range of 15 to 30.

Envelope Release This parameter varies along the same values as the Env Attack, setting the rate that the envelope follower responds to decreasing signal levels. Typically useful values are in the range of 5 to 25.

Envelope Response This parameter varies along a continuum of 5 values, warping the "shape" of the envelope follower response from fully linear to fully logarithmic. This control is very useful, especially in conjunction with the Env Gain and Env Release parameters, for optimizing the way in which audio signals with different dynamic ranges and "crest factors" affect the degree of phase shift.

A logarithmic response can often be used to smooth out the envelope of signals with erratic amplitude response without slowing the attack time. Conversely, a linear shape makes the envelope follower more sensitive to small amplitude changes, and can be used to elicit more active phase shifter response from signals lacking in dynamic range.



MIDI Controls
Wet/Dry Mix
FX Input Level
FX Output Level
Modulation Offset
Modulation Range
Feedback

Feedback This parameter controls the amount and polarity of the signal recirculated through the phase shift network, from -100% to 100%.

Negative feedback has a somewhat different sonic character from positive feedback, and when the Feedback parameter is set negative with any of the Inverted I/O modes, the left channel will use positive feedback and the right channel will use negative feedback.

.The feedback control is more dramatic when the phase shifter is in a monophonic input mode, since the left and right phase shift networks are then connected in series. At values of 100%, the phase shifter will remain stable, on the verge of self-oscillation.

I/O Mode This parameter sets the input and output and modulation routing for the phase shifter. There are 5 different I/O modes:

- **Mono L -** In this mode, the right input channel of the Envelope Phaser is ignored. The left and right phase shift networks are connected in series for a total of 22 stages, and the left input channel supplies both the audio input and the envelope follower input. The output is monophonic.
- **Stereo -** In this mode, the Plug-in operates as a true stereo phase shifter, with separate signal paths for the left and right input channels. The envelope follower input is derived from the scaled sum of left and right inputs.
- **Stereo Inverted -** In this mode, the Plug-in operates in stereo, as for Stereo mode, but the envelope signals driving the phase shifters are inverted between the left and right sides. This produces a highly spatial phasing effect in which the "motion" in the left channel is always matched with an inverted motion in the right channel.
- **Mono L/Env R -** This mode is the same as Mono L, except that the envelope signal is derived solely from the right input channel (this is typically referred to as a "sidechain" input.) This allows right channel control signals that may be unrelated to the left channel audio input to drive the phase shifter, allowing cross-modulation between the envelope of one signal and the audio of another.
- **Mono Inv L/Env R -** This is similar to the Mono L/ Env R side-chain mode, except that the left input signal is applied to both left and right sides of the phase shifter. The phase shifter then operates in the same way as for Stereo Inverted mode, with the left and right output channels showing inverted modulation.

MIDI Modulation Parameters

The modulation parameters are used to dynamically rescale several of the user-editable parameters. Those user parameters should be set to the maximum desired values; these maximum values are then modulated by the corresponding modulation parameters.

Mod Offset - This modulation input is used to dynamically rescale (from 0 to 100%) the offset specified by the user Mod Offset parameter. The resulting offset is the bias that is applied to the phase shifter before envelope modulation takes place. *(This parameter was not present in the RFX Phaser Plug-in.)*

Mod Range - This modulation input is used to dynamically rescale (from 0 to 100%) the phase shift range specified by the user Mod Range parameter. The resulting phase shift range is then further rescaled by the output of the envelope follower before being applied to the phase shifter.

Feedback - This modulation input is used to dynamically rescale (from 0 to 100%) the amount of feedback specified by the user feedback parameter.



E-MU / ENSONIQ U.S.A.

P.O. Box 660015

Scotts Valley, CA USA

95067-0015

Telephone 831-438-1921

FAX 831-438-8612

EUROPE, AFRICA, MIDDLE EAST

E-MU / ENSONIQ

Suite 6, Adam Ferguson House

Eskmills Industrial park

Musselburgh, East Lothian

Scotland, EH21 7PQ

Telephone +44 (0) 131-653-6556