EQUINOX

SERVICE MANUAL

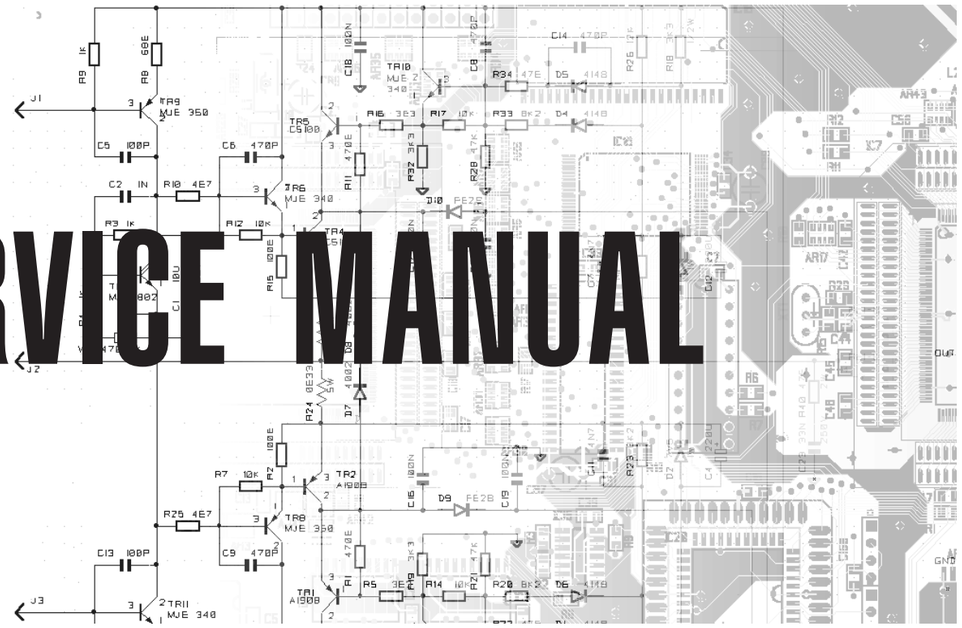

GENERALMUSIC®

CODE: 270217

Index

2	Opening and Keyboard Disassembling Instructions & NOTICE
3	Layout
4	Assembly & Wiring Connections 1st version
5	Assembly & Wiring Connections 2nd version
6	1st and 2nd version Block Diagrams
7	Timing Table
8	Power Supply, Phones, Midi & Controls I/O, Analog I/O Board Schematics 1st Version
9	Power Supply, Phones, Midi & Controls I/O Pcb Layouts
10	Mixer Board Schematic and Pcb Layout 2nd Version
11	61 and 76 Notes L/R Contact Boards, Keyboard Interface Board Schematics
12	Controls Interface & Controls Panel Board Schematics
13	Controls Panel Pcb Reverse Layout, Controls Interface and Keyboard Interface Pcb Layout
14	Cpu & Sound Generator Schematic (Part 1/2)
15	Cpu & Sound Generator Schematic (Part 2/2)
16	Cpu & Sound Generator Pcb Layout
17	Cpu & Sound Generator Map
18	Vocal Processor Board Schematic & Pcb Layout (Optional Accessory)
19	Test & Adjustment Procedure, Spare Part List

Warnings

Notice

Service must be carried out by qualified personnel only.Any tampering carried out by unqualified personnel during the guarantee period will forfeit the right to guarantee.
For a correct operation of the instrument, after having switched off, be careful to wait at least 3 seconds before switching on again.
To improve the device's specifications, the schematic diagrams may be subject to change without prior notice.
All components marked by this symbol have special safety characteristics, when replacing any of these components use only manufacturer's specified parts.
The (μ) micro symbol of capacitance value is substituted by U.
The (Ω) omega symbol of resistance value is substituted by E.
The electrolytic capacitors are 25Vdc rated voltage unless otherwise specified.
All resistors are 1/8Ω unless otherwise specified.
All switches shown in the "OFF" position. All DC voltages measured to ground with a voltmeter 20KOhm/V.

← Soldering point.	↑ Supply voltage.	⊥ Logic supply ground.
⊷ Male connector.	⊡ Test point.	⊥ Analog supply ground.
⊃ Female connector.	⬭ Flag joined with one or more flags with the same signal name inscribed.	⏚ Chassis ground.
⊷ M/F faston connector.		⊕ Earth ground.

ATTENTION

Observe precautions when handling electrostatic sensitive devices.

Address

GENERALMUSIC S.p.A. Sales Division: 47842 S.Giovanni in Marignano (RN) ITALY - Via delle Rose, 12 - tel. 0541/959511 - fax 0541/957404
GENERALMUSIC on the NET: http://www.generalmusic.com

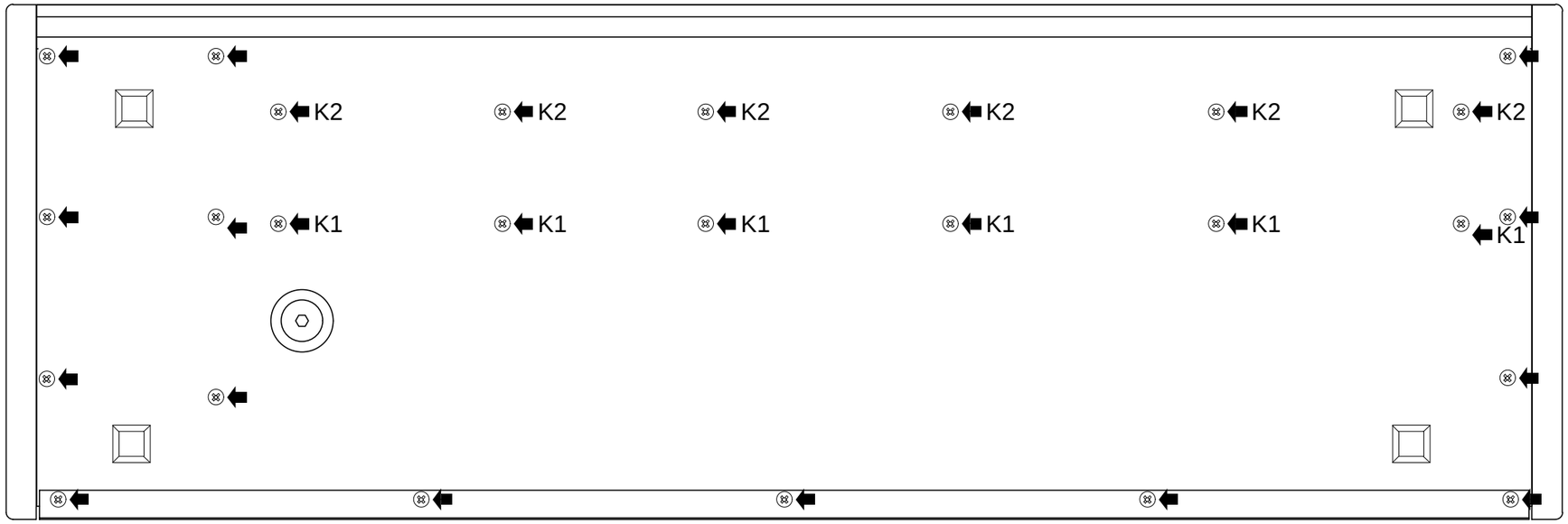

61 Notes

Opening Instructions

Disconnect the instrument from the mains.
Carefully turn the instrument over and unscrew the screws marked with the arrows. ⬅
Hold the chassis (top & bottom) tightly and turn the istrument the right way up, lift off the top chassis as shown below with care without forcing or disconnecting the cables.

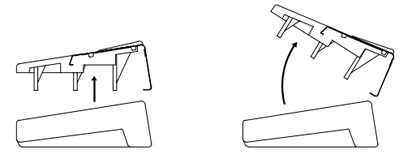

Keyboard Separation

(open the instrument before proceed)
To separate the keyboard from chassis, carefully turn the bottom chassis from horizontal to vertical, remove the screws marked by ⬅ K1 , put it back horizontal, holding top & bottom chassis move these tightly to the end of your job table, now unscrew the screws marked with ⬅ K2 to reassemble the keyboard & the chassis follow the instructions in reverse order.

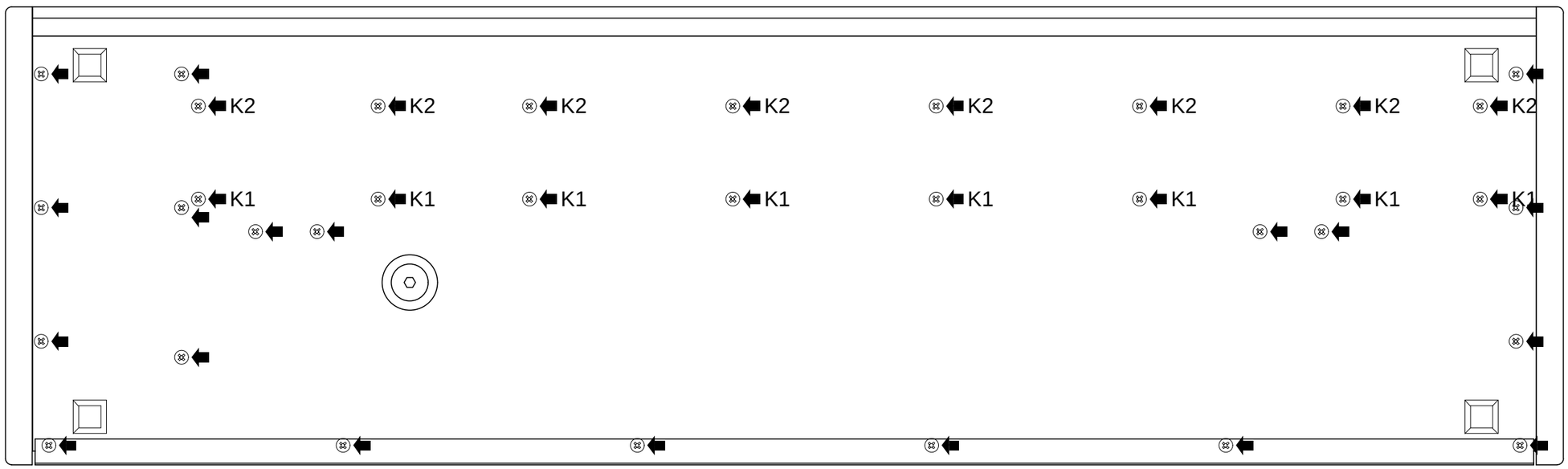

76 Notes

Keyboard Disassembling Instructions

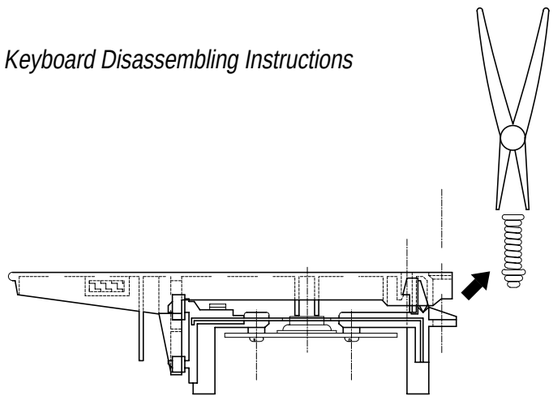

Remove the key return spring

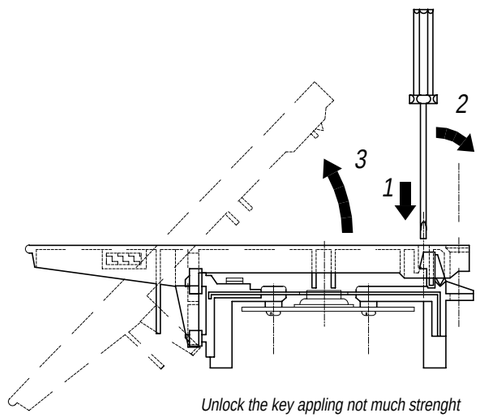

Unlock the key appling not much strenght
Note: To remove a sharp key before you must remove a near natural key.

NOTICE

The EQUINOX keyboard has manufactured in two versions:
The 1st version has a traditional supply (transformer and power supply board with mixer),
The 2nd version has a switching supply (SWT unit and mixer board).
All the keyboard specifications remain the same, unless the mains voltage:
the 1st version has two nominal mains voltages 115Vac-60Hz for U.S.A. or 230Vac-50Hz for CEE & other countries.
the 2nd version accept all mains voltages into the range of 100-230Vac and 50-60Hz.
All the other boards and s.o. software are unchanged between all these versions.
To recognize the models refer to the code imprinted on the rear label:
995155 - 995156 - 995157 - 995158 are the 1st versions,
995167 - 995168 - 995169 - 995170 are the 2nd versions.

DRW Boccato	DWG# 550151	PCB#	GENERALMUSIC S.p.A. ITALY
CKD Consorte	DISK: 65 PRT: 1/1	Opening Instructions Keyboard Disassembling Instructions	ALL RIGHTS ARE RESERVED, NO COPIES OR REPRODUCE THIS DOCUMENT WITHOUT WRITTEN CONSENT BY GENERALMUSIC.
APP. Orsetti	REV: 30/09/98		

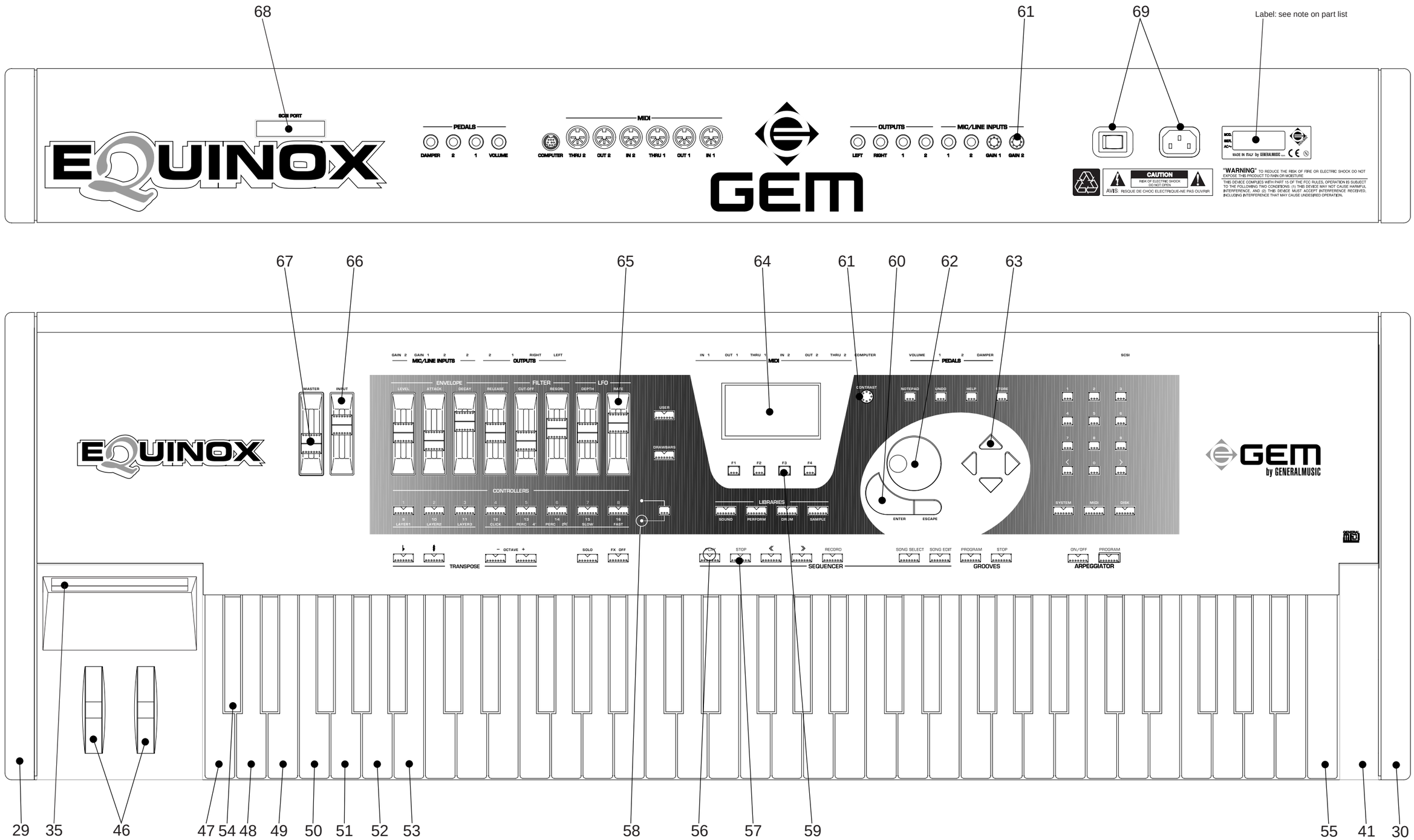

Note: for descriptions and codes refer to Ref column on spare part list above on this manual.

DRW Boccato	DWG# 550154	PCB#	GENERALMUSIC S.p.A. ITALY
CKD Consorte	DISK: 65 PART: 1/1	Layout	ALL RIGHTS ARE RESERVED, NO COPIES OR REPRODUCE THIS DOCUMENT WITHOUT WRITTEN CONSENT BY GENERALMUSIC
APP. Consorte	REV: 23/09/98		

Note: For part descriptions and codes refer to spare part list above on this manual (REF column).
This drawing shows the 1st version 76 keys with traditional supply, the 61 keys is similar.

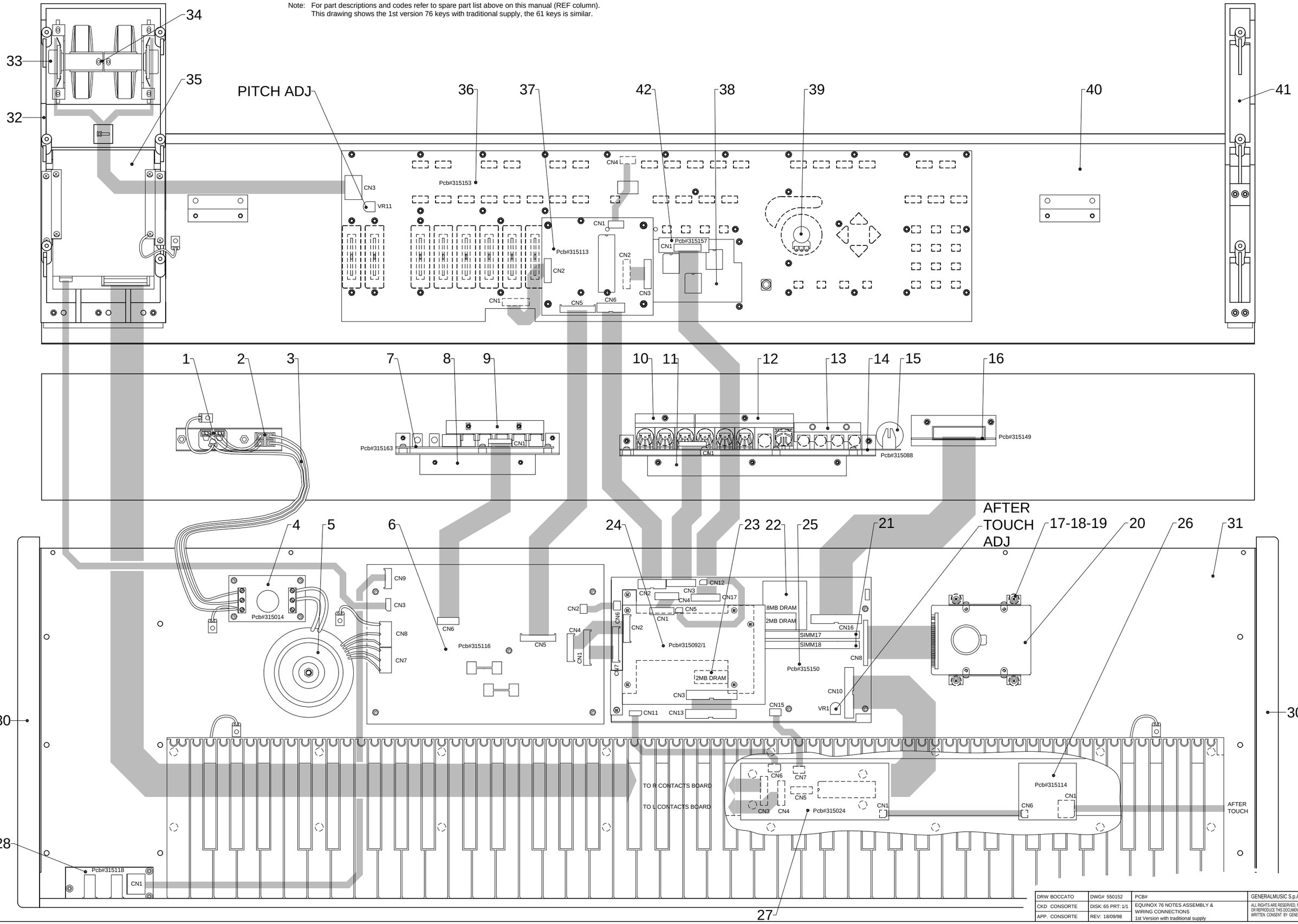

DRW BOCCATO	DWG# 550152	PCB#	GENERALMUSIC S.p.A. ITALY
CKD CONSORTE	DISK: 65 PRT: 1/1	EQUINOX 76 NOTES ASSEMBLY & WIRING CONNECTIONS 1st Version with traditional supply	ALL RIGHTS ARE RESERVED. NO COPIES OR REPRODUCE THIS DOCUMENT WITHOUT WRITTEN CONSENT BY GENERALMUSIC.
APP. CONSORTE	REV: 18/09/98		

Note: For part descriptions and codes refer to spare part list above on this manual (REF column).
This drawing shows the 2nd version 76 keys with switching supply, the 61 keys is similar.

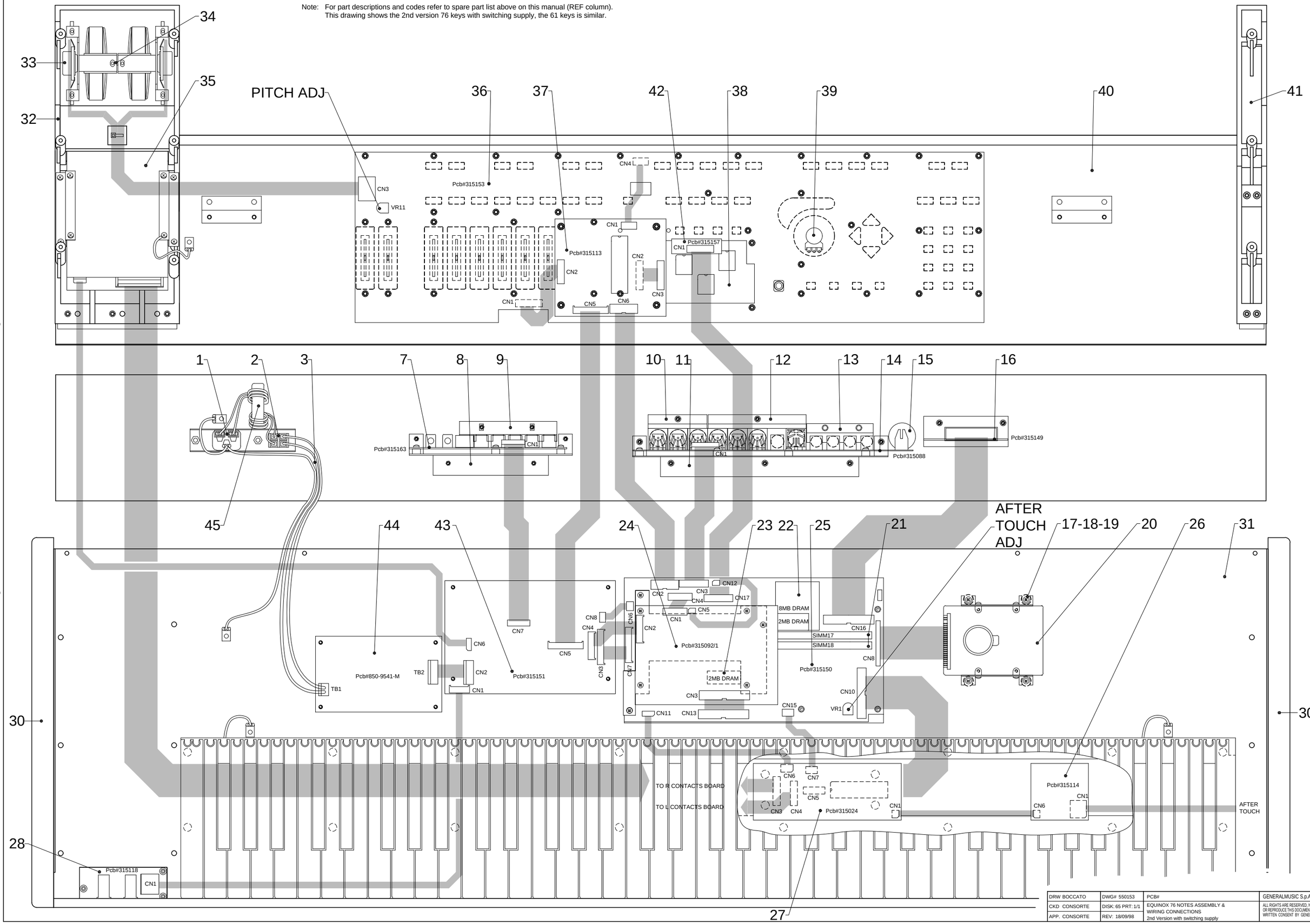

DRW BOCCATO	DWG# 550153	PCB#	GENERALMUSIC S.p.A. ITALY
CKD CONSORTE	DISK: 65 PRT: 1/1	EQUINOX 76 NOTES ASSEMBLY & WIRING CONNECTIONS	ALL RIGHTS ARE RESERVED. NO COPIES OR REPRODUCE THIS DOCUMENT WITHOUT WRITTEN CONSENT BY GENERALMUSIC.
APP. CONSORTE	REV: 18/09/98	2nd Version with switching supply	

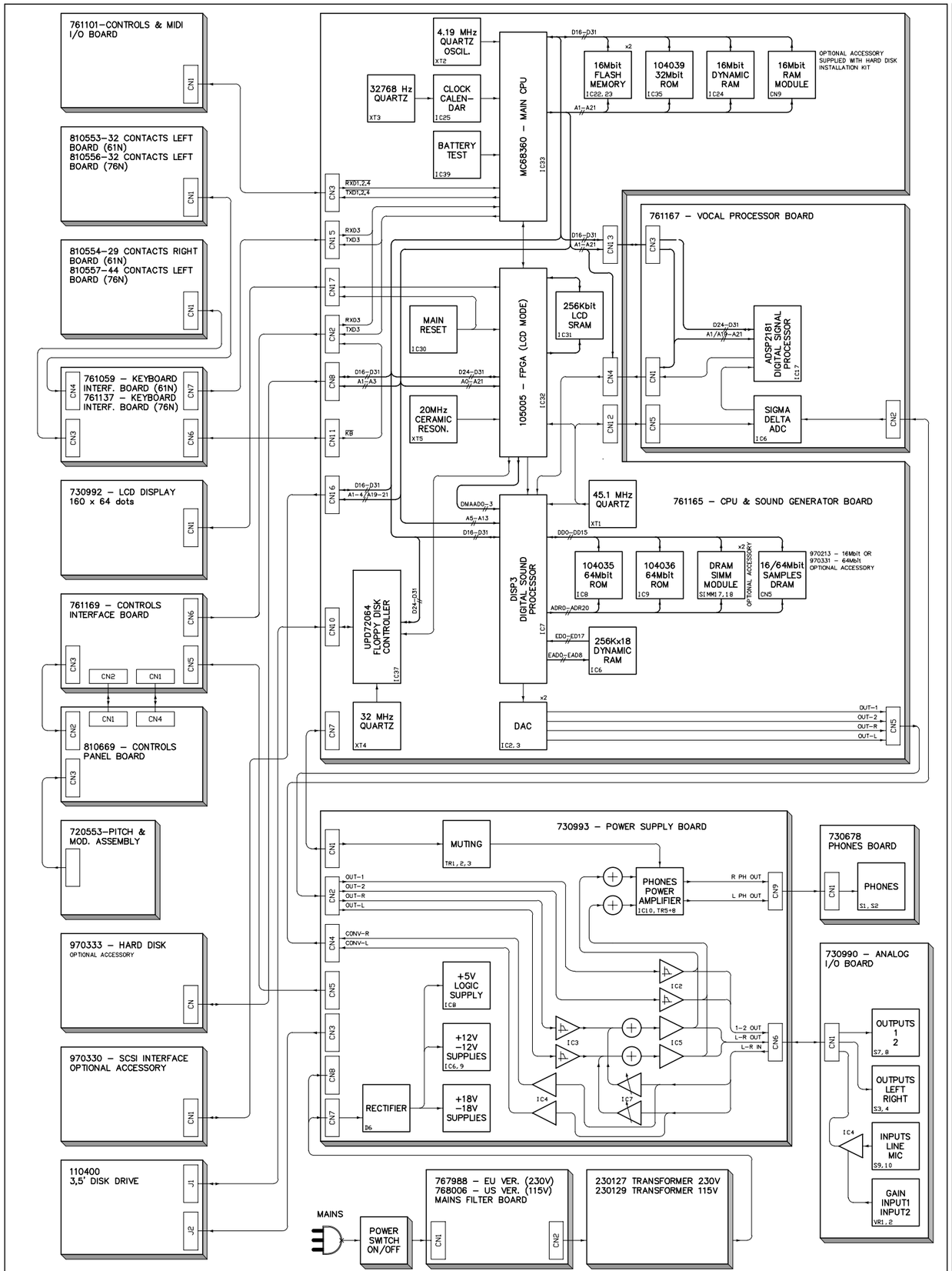

DRW Boccato	DWG# 550155	PCB#	GENERALMUSIC S.p.A. ITALY
CKD Consorte	DISK: 65 PRT: 1/1	Block Diagram 1st Version with traditional supply	ALL RIGHTS ARE RESERVED. NO COPIES OR REPRODUCE THIS DOCUMENT WITHOUT WRITTEN CONSENT BY GENERALMUSIC.
APP. Consorte	REV: 25/09/98		

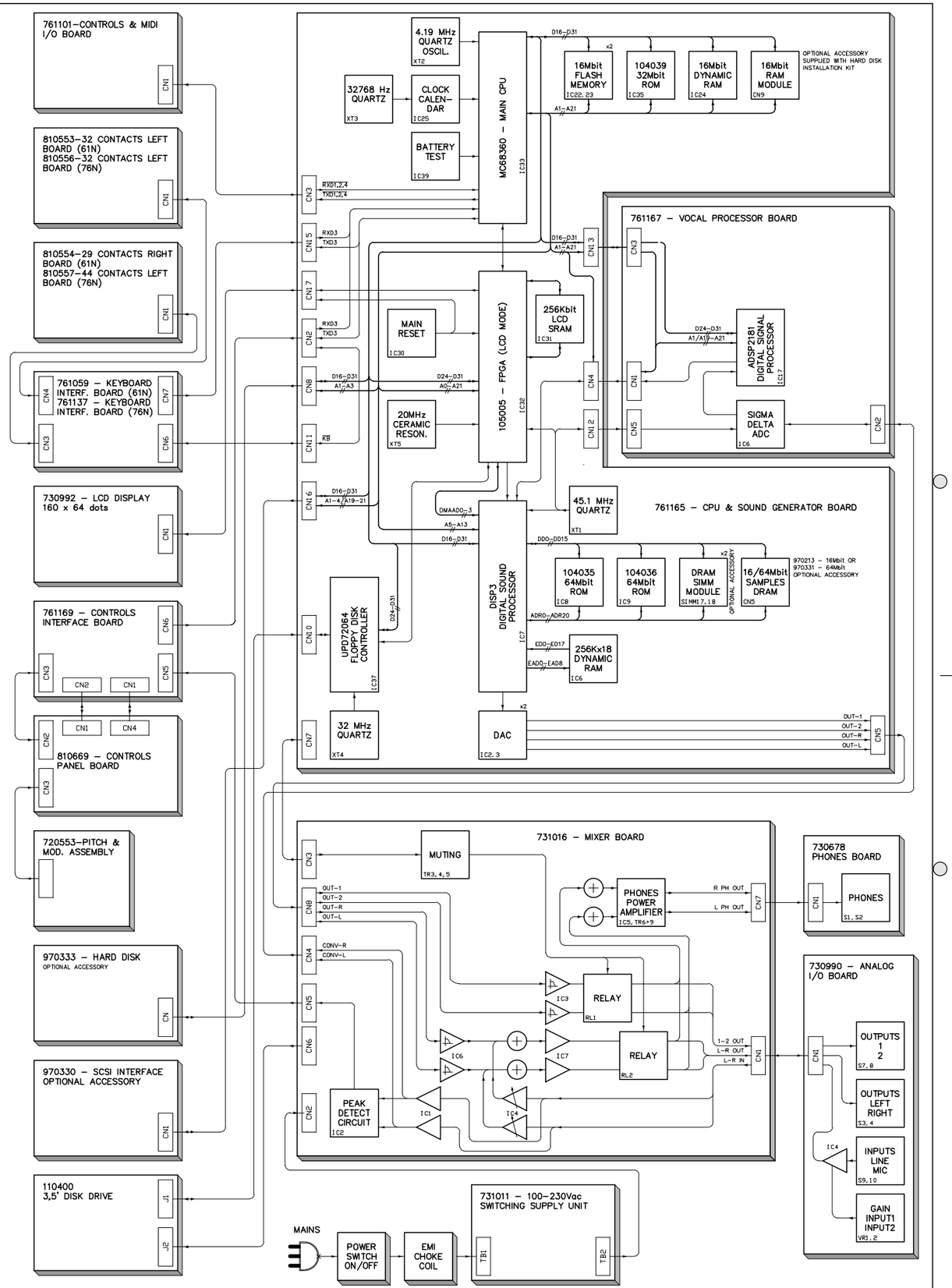

DRW Boccato	DWG# 550165	PCB#	GENERALMUSIC S.p.A. ITALY
CKD Consorte	DISK: 65 PRT: 1/1	Block Diagram 2nd Version with switching supply	ALL RIGHTS ARE RESERVED. NO COPIES OR REPRODUCE THIS DOCUMENT WITHOUT WRITTEN CONSENT BY GENERALMUSIC.
APP. Consorte	REV: 25/09/98		

POWER ON/OFF, RESET

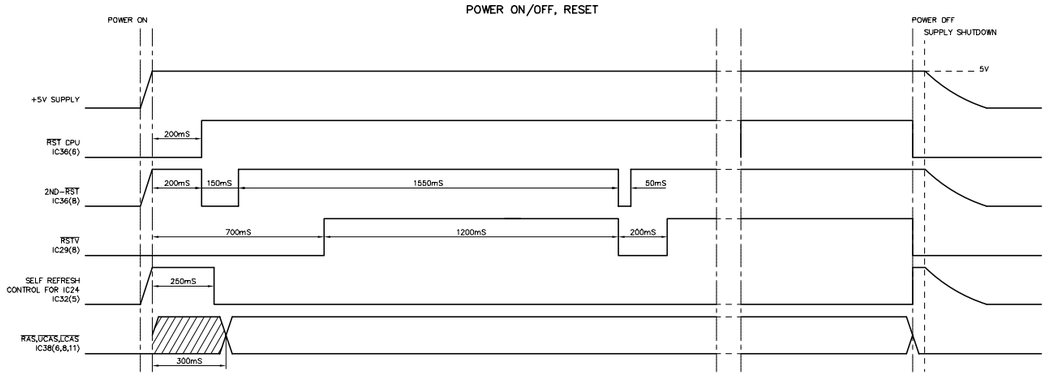

LCD TIMING

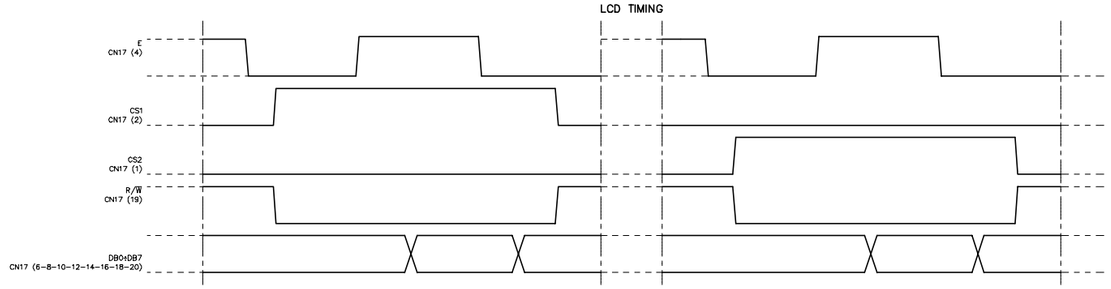

DISP 3 TIMING

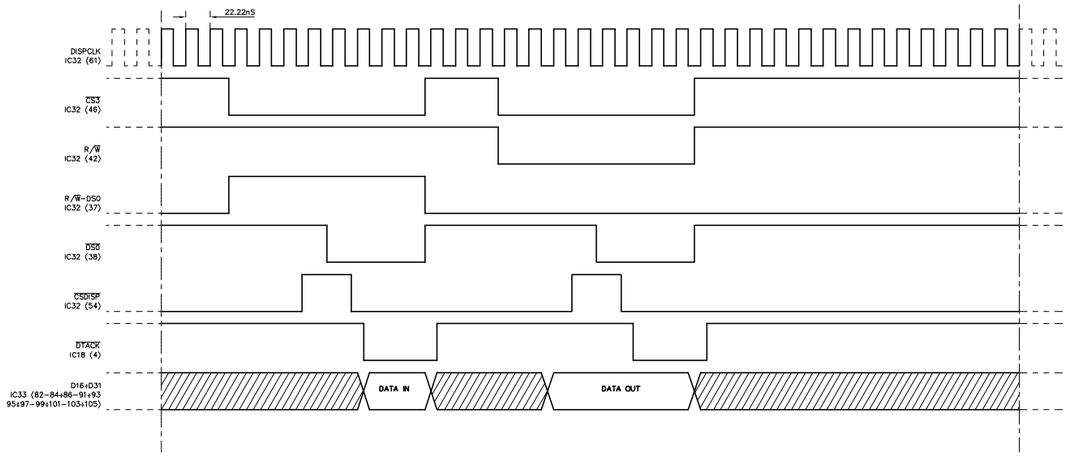

FLOPPY DISK DRIVE AND HARD DISK TIMINGS

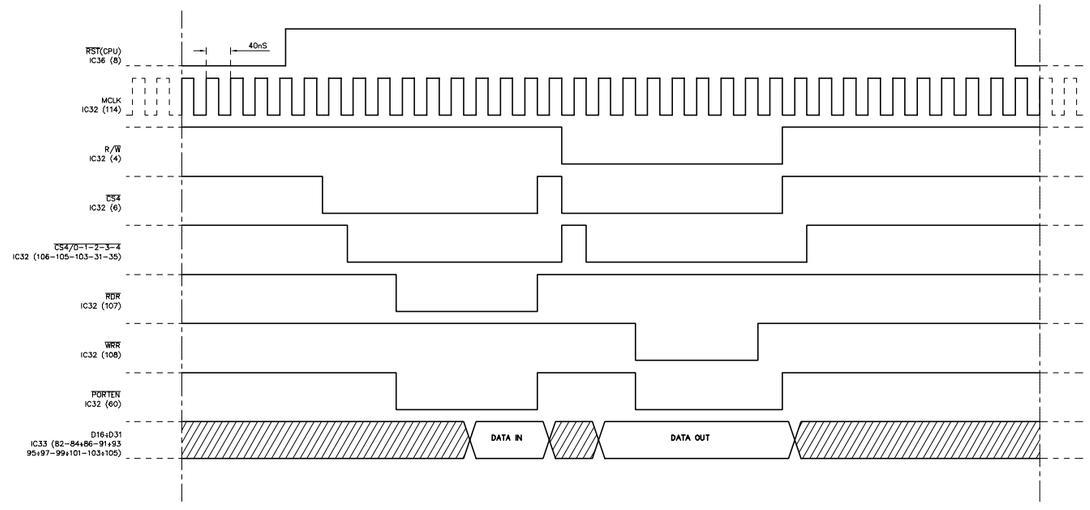

PCM SERIAL DATA BUS

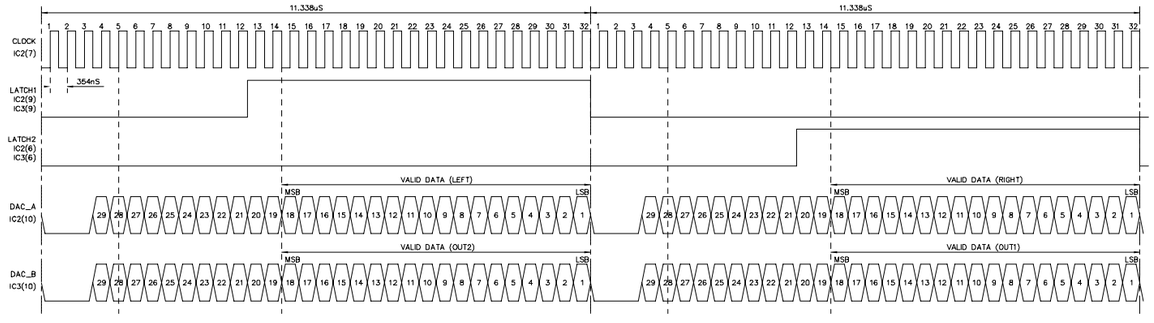

NOTE: ALL COMPONETS PIN REFERENCE ARE LOCATED ON "CPU & SOUND GENERATOR BOARD" UNLESS OTHERWISE SPECIFIED.

DRW BOCCATO	DWG# 550159	SCHEMATIC DIAGRAM EQUINOX	GENERALMUSIC S.p.A. ITALY
CKD RICCOBELLI	DISK: 65 PART: 1/1		ALL RIGHTS ARE RESERVED, NO COPIES OR REPRODUCE THIS DOCUMENT WITHOUT WRITEN CONSENT BY GENERALMUSIC.
APP. PANNELLI	REV: 07-10-98	TIMING TABLE	

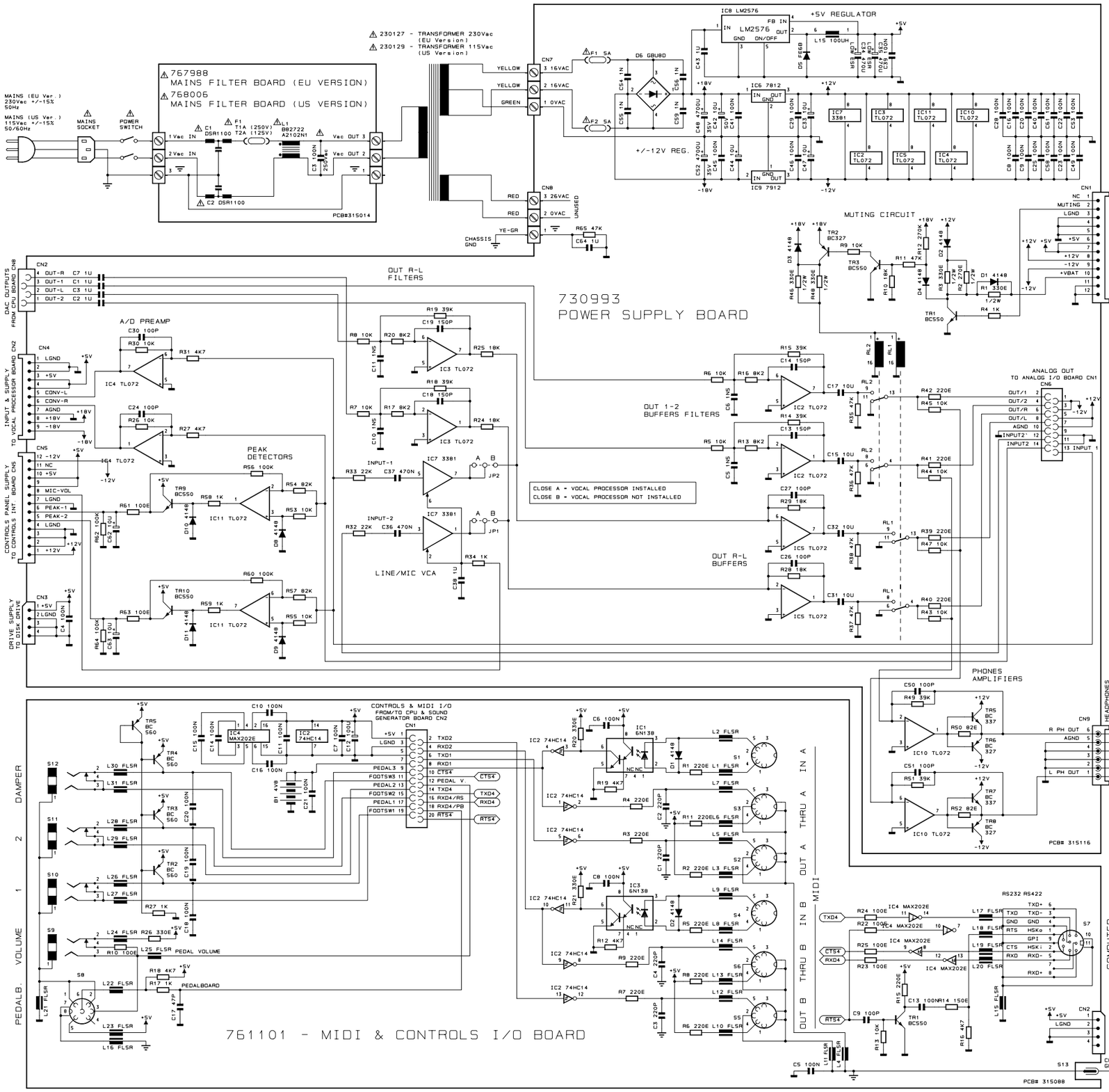

ADJUSTMENT TABLE

N.	ADJUSTMENT TYPE	TEST POINT	KEY PRESSED	OPERATION POINT	READING VALUE	NOTE:
1	AFTERTOUCH ADJ	VR1 SIDE CN15	ANY KEY	VR1	~2Vcc	APPLY A 700 grams WEIGHT ON THE KEY FRONT END. TO OBTAIN A VALID MEASURE PRESS THE KEY NOTE TWO OR THREE TIMES WITH MORE PRESSURE, TURN THE TRIMMER TO HAVE THE VALUE SPECIFIED.
2	PITCH CENTRE ADJ	R1 SIDE C1 CONTROLS PANEL BOARD	WHEEL AT CENTRE	VR11 CONTROLS PANEL BOARD	2.5Vcc	SET THE OSCILLOSCOPE ON D.C. AT 1V/div. 1mS/div. VERIFY THAT THE VOLTAGE VALUE SWING FROM 0 TO 5V WHEN YOU ROTATE THE WHEEL FROM MINIMUM TO MAXIMUM POSITION.

DRW BOCCATO	DWG# 550156	PCB# 315014/315116/315117/315088/315118/315123	GENERALMUSIC S.p.A. ITALY
CKD CONSORTE	DSK# 65PART:1/1	SCHEMATIC DIAGRAM	ALL RIGHTS ARE RESERVED, NO COPIES OR REPRODUCE THIS DOCUMENT WITHOUT WRITTEN CONSENT BY GENERALMUSIC
APP. ORSETTI	REV: 27-06-97	POWER AMP. & SUPPLY, PHONES, MIDI CONTROLS, ANALOG I/O BOARDS	

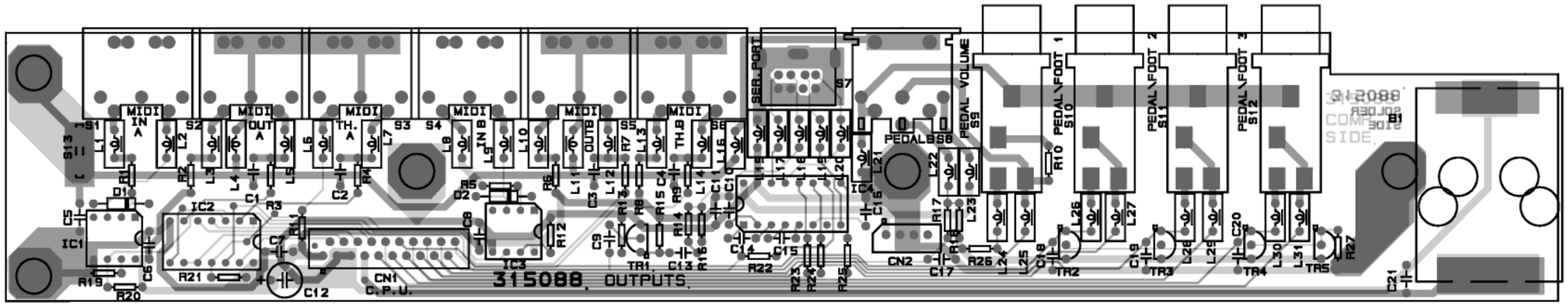

MIDI & CONTROLS I/O BOARD (PCB#315088)

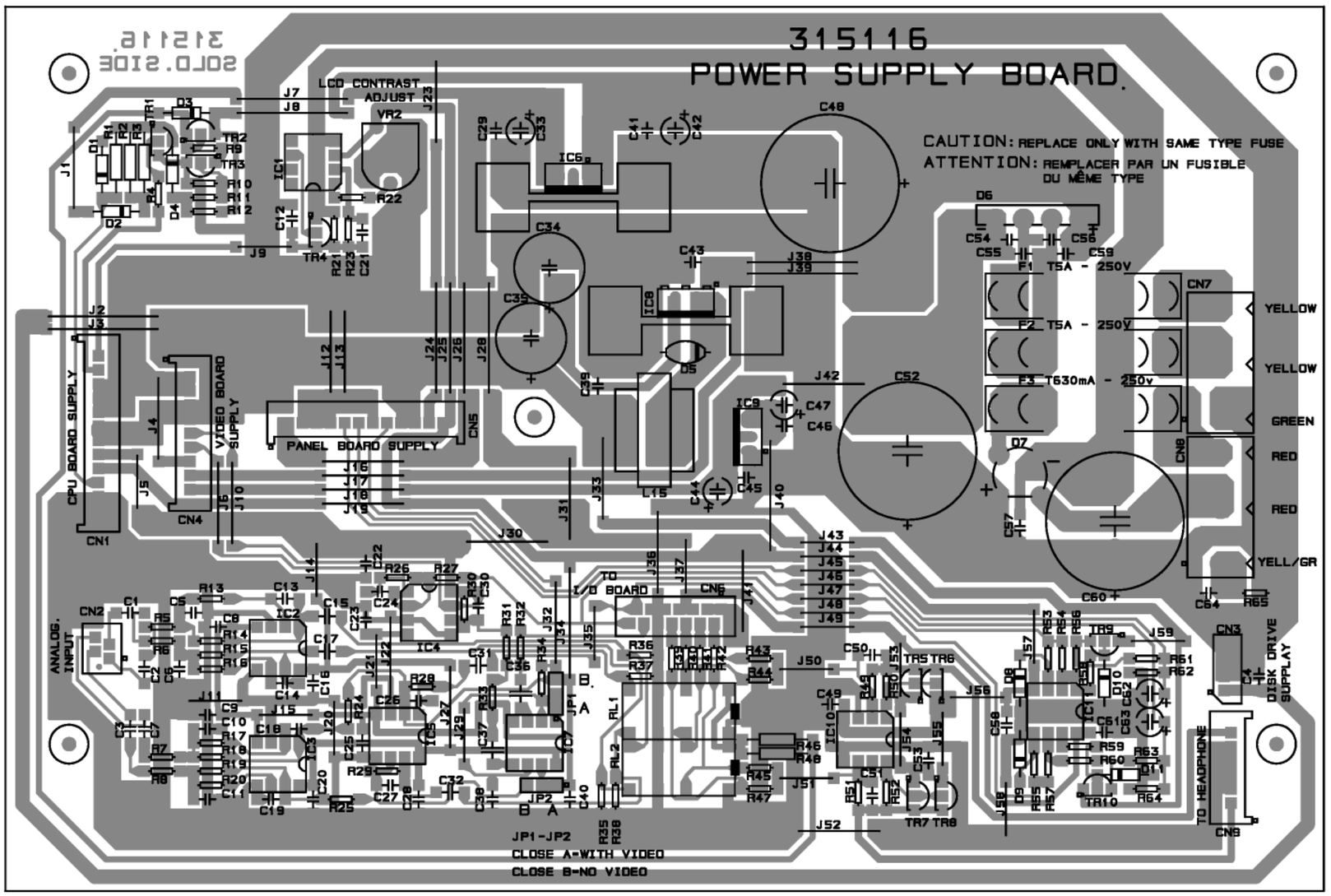

POWER SUPPLY BOARD (PCB#315116)

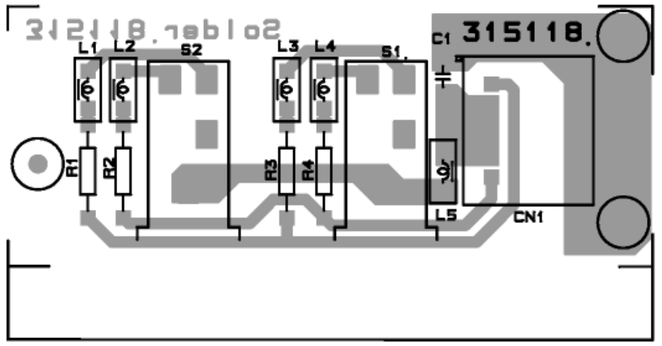

PHONES BOARD (PCB#315118)

DRW: BOCCATO	DWG: 315088/116	SCHEMATIC DIAGRAM EQUINOX	GENERALMUSIC S.p.A. Italy
CKD: RICCOBELLI	DISK: 65 PART: 1/1	Power Supply, Midi & Controls and Phones Board Pcb Layout	ALL RIGHTS ARE RESERVED. NO COPIES OR REPRODUCE THIS DOCUMENT WITHOUT WRITTEN CONSENT BY GENERALMUSIC.
APP: PANNELLI	REV: 08-10-98		

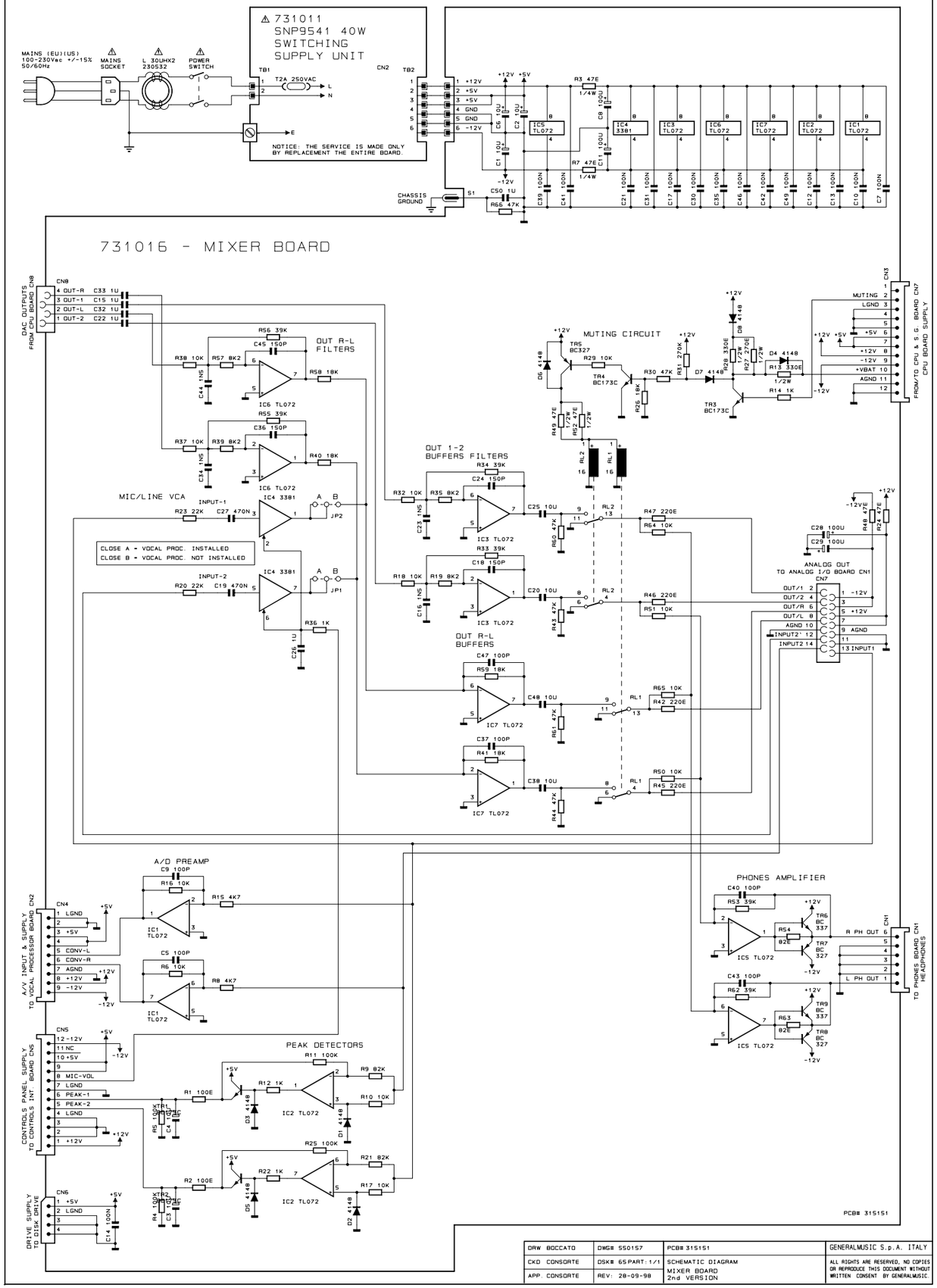

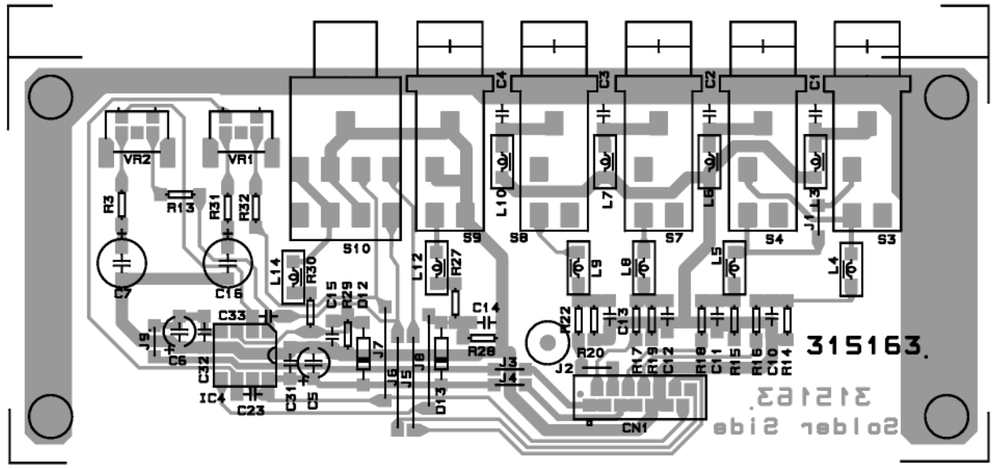

ANALOG I/O BOARD (PCB#315163)

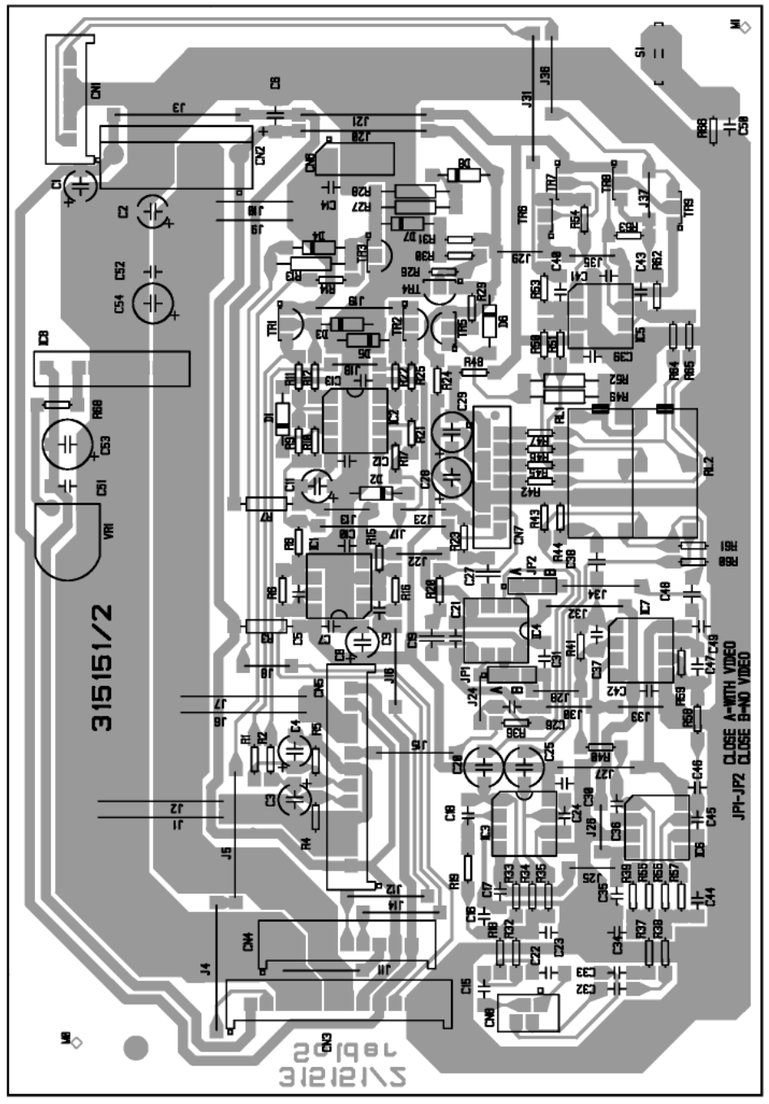

MIXER BOARD (PCB#315151/2)

DRW: BOCCATO	DWG: 315151/163	SCHEMATIC DIAGRAM EQUINOX	GENERALMUSIC S.p.A. Italy
CKD: RICCOBELLI	DISK: 65 PART: 1/1	Mixer Board and Analog I/O Board Pcb Layouts	ALL RIGHTS ARE RESERVED, NO COPIES OR REPRODUCE THIS DOCUMENT WITHOUT WRITTEN CONSENT BY GENERALMUSIC.
APP: PANNELLI	REV: 09-10-98		

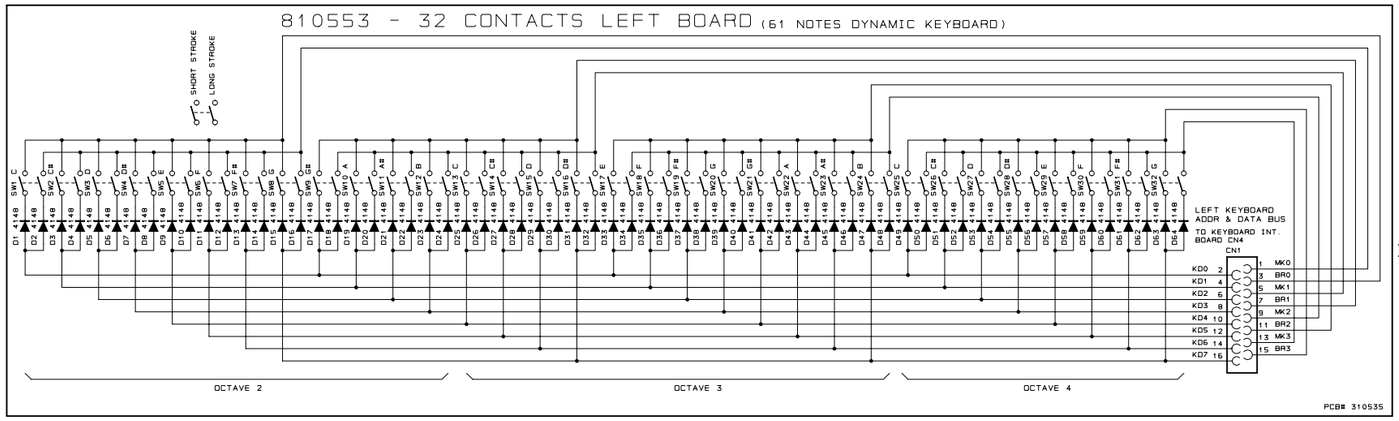

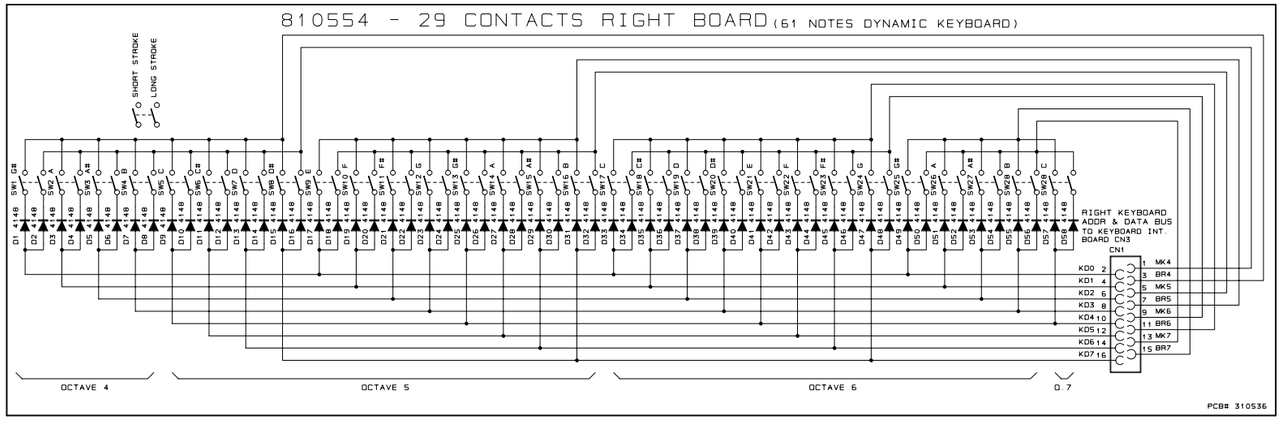

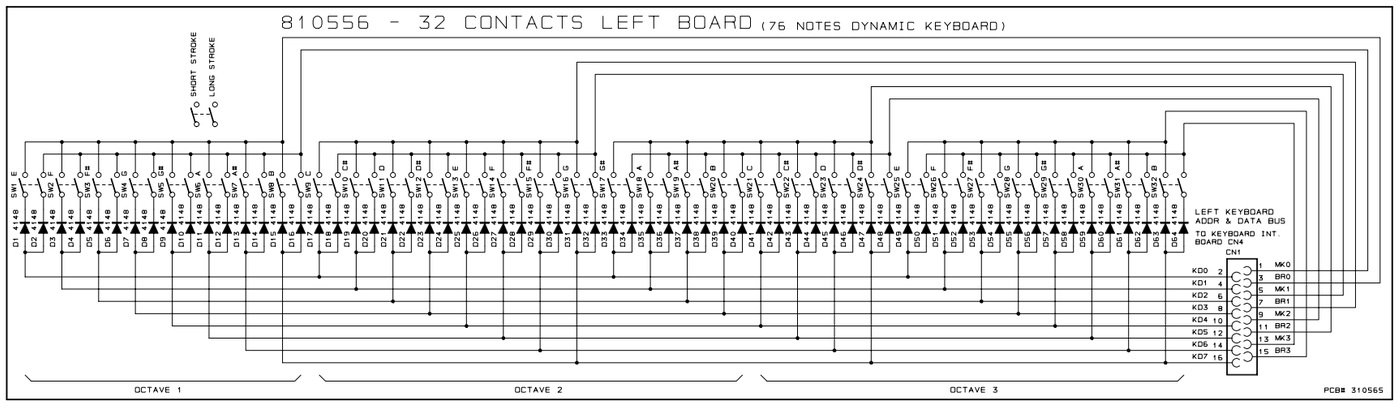

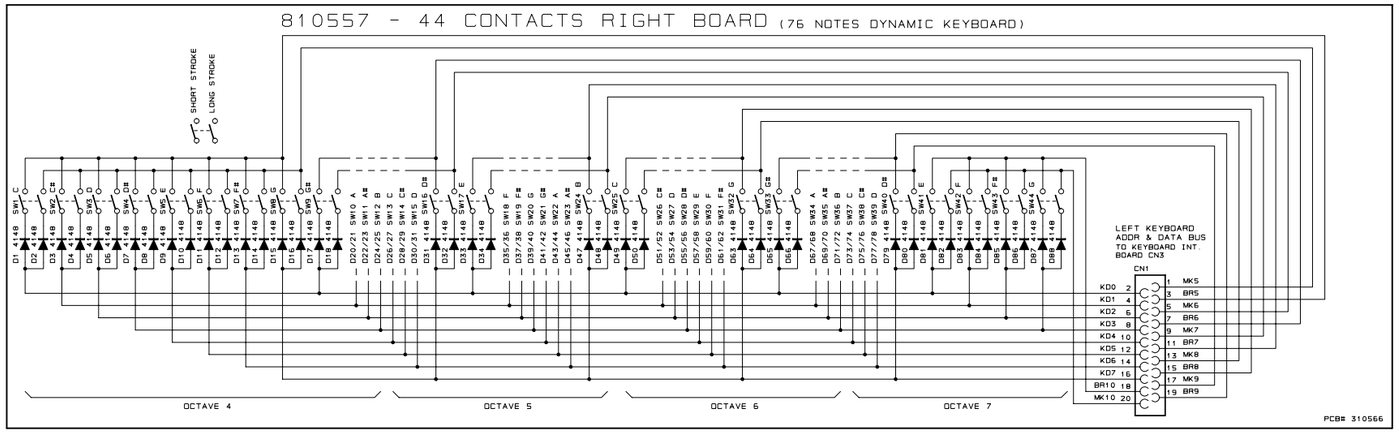

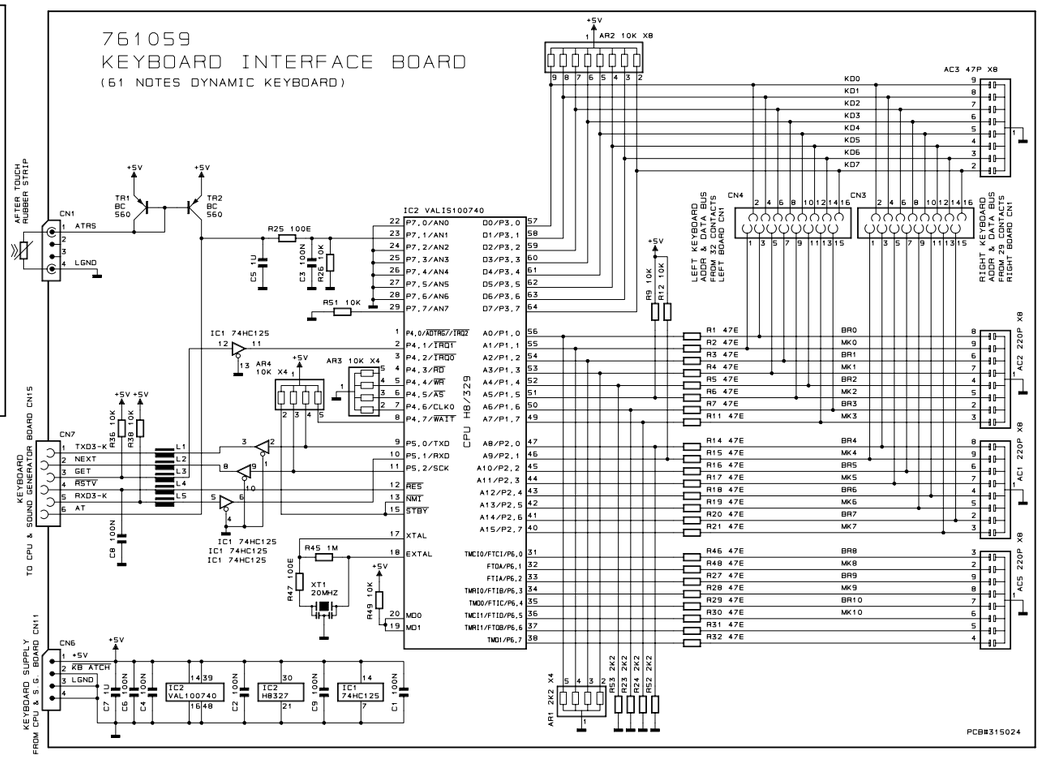

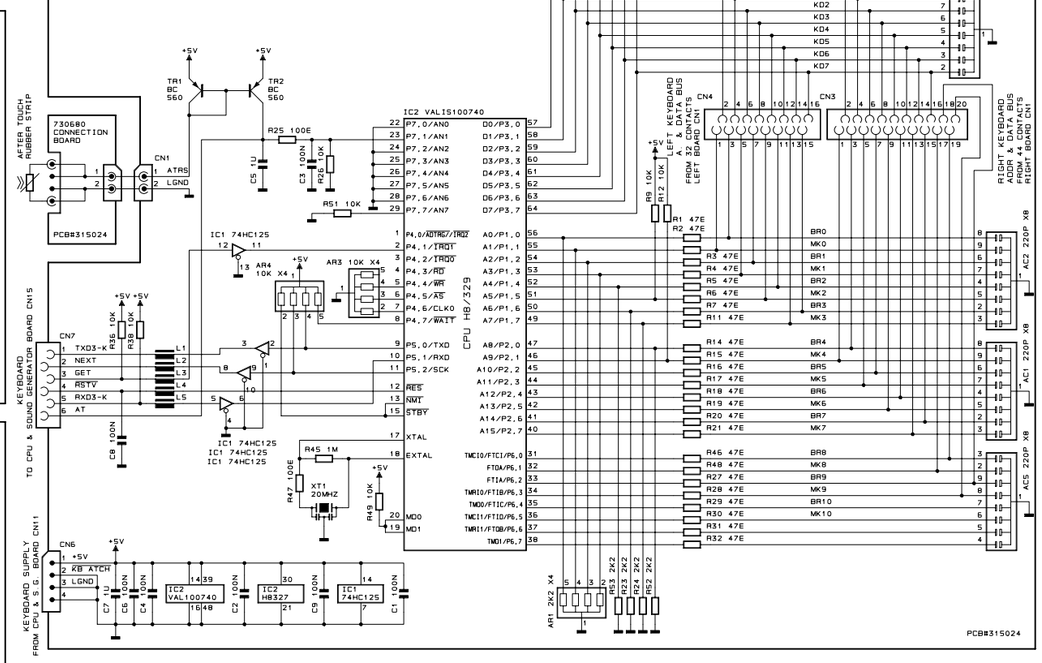

DRW BOCCATO	DWG# 550158	PCB# 310565, 310566, 310524, 310536, 310535	GENERALMUSIC S.p.A. ITALY
CKD RICCOBELLI	DSK# 65 PART: 1/1	SCHEMATIC DIAGRAM 61NOTES & 76 NOTES KEYBOARD INTERFACE & L/R CONTACT BOARDS	ALL RIGHTS ARE RESERVED, NO COPIES OR REPRODUCE THIS DOCUMENT WITHOUT WRITTEN CONSENT BY GENERALMUSIC
APP. CONSORTE	REV: 01/10/98		

761169 - CONTROLS INTERFACE BOARD

CONTROLS PANEL SUPPLY
FROM POWER AMP. & SUPPLY BOARD CN5

CN5
1 +12V
2 LGND
3
4
5 PEAK-1
6 PEAK-2
7 LGND
8
9 +5V
10
11 NC
12

POT1

VEE
VLCD
HD LED
KB

CONTROLS PANEL

FROM CPU & S.G. BOARD CN2
CN6
1 2 FOOTSW1
3 4 PEDAL1
5 6 PEDAL2
7 8 FOOTSW3
9 10 PEDAL3
11 12 FOOTSW2
13 14 PEDAL V.
15 16 RSTV

PITCH BEND
MODULATION
FOOTSW2
PEDAL V.
FOOTSW1
FOOTSW3
POT.9
MULTIPLEXER

IC3 VALIS100740
22 P7.0/AN0
23 P7.1/AN1
24 P7.2/AN2
25 P7.3/AN3
26 P7.4/AN4
27 P7.5/AN5
28 P7.6/AN6
29 P7.7/AN7

D0/P3.0 57
D1/P3.1 58
D2/P3.2 59
D3/P3.3 60
D4/P3.4 61
D5/P3.5 62
D6/P3.6 63
D7/P3.7 64

AR1 10K X8
AR3 10K X4
AC1 47PF X8

CN3
DIR 1
FQ 3
CLK 5
SD 7
VEE 9
VLCD 11
12HD_LED

TO CONTROLS PANEL BOARD CN2

FQ 1 P4.0/ADTRG/IRQ2
GET_TXD 2 P4.1/IRQ1
A0 3 P4.2/IRQ0
A1 4 P4.3/RD
A2 5 P4.4/WR
A3 6 P4.5/AS
DIR 7 P4.6/CLK0
8 P4.7/WAIT
9 P5.0/TXD
10 P5.1/RXD
11 P5.2/SCK
12 RES
13 NMI
15 STBY
17 XTAL
18 EXTAL
20 MD0
19 MD1

A0/P1.0 56
A1/P1.1 55
A2/P1.2 54
A3/P1.3 53
A4/P1.4 52
A5/P1.5 51
A6/P1.6 50
A7/P1.7 49
A8/P2.0 47
A9/P2.1 46
A10/P2.2 45
A11/P2.3 44
A12/P2.4 43
A13/P2.5 42
A14/P2.6 41
A15/P2.7 40

TMCI0/FTCI/P6.0 31
FTOA/P6.1 32
FT1A/P6.2 33
TMRI0/FTIB/P6.3 34
TMO0/FTIC/P6.4 35
TMCI1/FTID/P6.5 36
TMRI1/FTOB/P6.6 37
TMO1/P6.7 38

100740 - PERIPHERIAL CPU

D9 4148
D10 4148
D13 4148
D11 4148
D12 4148
D14 4148
D16 4148
D15 4148

R33 100E
R34 100E
R35 100E
R36 100E
R37 100E
R47 100E
R48 100E
R46 100E

R63 100E
R31 1M
R30 100E
XT1 20MHZ
R29 10K
R25 2K2
R32 2K2
BAUD RATE3

AR2 2K2 X4
TR1 BC327
TR3 BC 327
R65 10K
R45 1K
R44 1K
R53 560E
R52 100E
R49 100E
C38 100N
C32 100P
C31 33P

R66 1K
R64 1K
R62 1K
R61 1K
R43 1K

C28 100N
C27 100N
C26 100N
C18 100N
C17 100N
C16 100N
C14 100N

R6 10K
R0 10K
R54 560E
R8 330E
R58 560E
R7 330E

IC1-A 74HC125
IC1-C 74HC125
IC1-B 74HC125
IC1-D 74HC125

GET_TXD
TXD3
RXD3
NEXT

R41 100K
R39 100K
R38 100K

IC4 74HC4351
DEMULTIPLEXER ANALOG MUX
X0 X1 X2 X3 X4 X5 X6 X7
XC A0 A1 A2 E1 E2

R59 1K
R57 1K
R50 1K
R51 1K
R55 1K
R40 1K

R42 100E

C23 100N
C22 100N
C21 100N
C24 100N
C19 100N
C25 100N

POT1
CN2
M.VOL. 7
MODULATION 9
PITCH_BENDER 11
+12V 13
-12V 15
FROM CONTROLS PANEL BOARD CN1
VOLUMES

POT1 R19 1K
POT2 R18 1K
POT3 R17 1K
POT4 R20 1K
POT5 R15 1K
POT6 R23 1K
POT7 R16 1K
POT8 R22 1K

IC2 74HC4351
R28 100E

C7 100N
C6 100N
C5 100N
C8 100N
C3 100N
C10 100N
C4 100N
C9 100N

IC4 74HC4351
IC2 74HC4351
IC3 VALIS100740
IC1 74HC125

C15 100N
C2 100N
C12 100N
C29 100N
C20 100N
C13 100N

R24 3K3
C24 100N
C11 10U
R21 4K7
-12V

C38 10U
C37 100N
C33 100N
C36 10U
C35 100N
C34 10U

R10 3K3
R14 3K3
R13 3K3
TR2 BC550C

CN1
D7 1
D6 2
D5 3
D4 4
D3 5
D2 6
D1 7
D0 8
NC 9
10

CN4
1 D7
2 D6
3 D5
4 D4
5 D3
6 D2
7 D1
8 D0
9 LGND
10 EN_LED

TO CONTROL INT. BOARD CN3

CN2
A15 A14
A13 A12
A11 A10
A9 A8

DL18
R33 180E
DISK

CONTRAST
VR101 5K8
R1 15K

810669 - CONTROLS PANEL BOARD

SW12
DIAL

R10 1K
R8 100K
C20 100P
IC1-A 74HC86
IC1-B 74HC86
R2 22K
C18 100P

R12 1K
R7 100K
C21 100P
IC1-D 74HC86
IC1-C 74HC86
R3 22K
C14 100P

IC2-B 74HC74
IC2-A 74HC74
IC3-A 74HC74
IC3-B 74HC74
D FF

C9 100N
C10 10U
C18 100N
IC3-C 74HC74
IC2-C 74HC74
IC8-B 74HC164
IC7-B 74HC164
IC9-B 74HC164
IC1-E 74HC86
IC5-B 74HC164
IC6-B 74HC164
C17 100N
C26 100N
C30 100N
C31 100N
C33 100N
C16 100N
C23 100N

C29 100N
C26 100N
IC4-C TL072
+12V
-12V
PROGRAM ARP.

C13 100N
C23 100N
C22 100N
C39 100N
VARICAPS FIX POINTS

1 2 3 4 5 6 7 8 PROGRAM ARP. 1 2 3 4 5 6 7 8 SYSTEM
D0 D1 D2 D3 D4 D5 D6 D7 D0 D1 D2 D3 D4 D5 D6 D7
SW9 SW6 SW7 SW8 SW10 SW14 SW24 SW15 SW2 SW24 SW16 SW25 SW26 SW5 SW44 SW42
A10 A9 A12

SW63 SW53 SW54 SW55 SW56 SW57 SW58 SW59 SW60 SW27 SW3 SW62 SW22 SW23 SW28 SW61
PLAY STOP << >> RECORD SONG SEL. SONG EDIT PROGRAM GROOVES STOP PROGRAM GROOVES ENTER ESCAPE DISK MIDI ARP. ON/OFF

SW29 SW30 SW31 SW32 SW46 SW47 SW48 SW49 SW63 SW35 SW36 SW8 SW37 SW7
LAYER 1 LAYER 2 LAYER 3 CLICK TRANSPOSE PERC 4' GROOVES PERC 2 2/3 SLOW FAST USER SEL. 1-8/7-16 DRAWBARS

A14 A11 A13 A15

SW18 SW19 SW20 SW21 SW4 SW1 SW2 SW3 SW39 SW63 SW60 SW38 SW40 SW41
F1 F2 F3 F4 STORE NOTEPAD UNDO HELP PERFORM FX OFF SOLO SOUND DRUM SAMPLE

ARPEGG. SEQUEN. GROOVES LIB. GROOVES LIB. TRANSPOSE
ON-OFF PROGRAM SYSTEM MIDI SONG SELECT SONG EDIT PROGRAM STOP DRUM SAMPLE RECORD >> PLAY STOP << SOUNDS PERFORM. USER DRAWBARS SOLO FX OFF SELECT 9-16 SELECT 1-8 FAST SLOW PERC 2 2/3 PERC 4' b ≈ - + LAYER 3 CLICK LAYER 1 LAYER 2

C34 1N

R64 560E R58 560E R59 560E R60 560E R56 560E R55 560E R46 560E R53 560E R54 560E R34 560E R35 560E R11 560E R6 560E R5 560E R51 560E R50 560E R24 560E R25 560E R2 560E R23 560E
DL35 DL36 DL16 DL17 DL31 DL32 DL33 DL34 DL14 DL15 DL30 DL29 DL26 DL27 DL28 DL12 DL13 DL1 DL2 DL24 DL25 DL11 DL19 DL9 DL10 DL7 DL8 DL20 DL21 DL22 DL23 DL5 DL6 DL3 DL4

R47 100E
R32 100E
C36 100P
C35 100P

IC9-A 74HC164
IC8-A 74HC164
IC7-A 74HC164
IC6-A 74HC164
IC5-A 74HC164
8bit Sin Pout SHIFT REGISTER

R44 1K R40 1K R43 1K R42 1K R41 1K

VOLUMES
TO CONTROLS INT. BOARD CN2
+12V
-12V
C2A 10U
C30 10U
CN1

VOLUMES ENVELOPE FILTER LFO
MASTER INPUT LEVEL ATTACK DECAY RELEASE CUT-OFF RESON. DEPTH RATE
VR1 10KB VR2 10KB VR3 10KB VR4 10KB VR5 10KB VR6 10KB VR7 10KB VR8 10KB VR9 10KB VR10 10KB

C2 100N C3 100N C4 100N C5 100N C6 100N C7 100N C8 100N C10 100N C11 100N C12 100N

R16 47K
PITCH CENTER ADJ.
VR11 22K
TR2 BC239C
R15 1K
IC4-A TL072
R17 10K
C27 100N
C35 100N
R14 10K
C28 100N
R18 1K
D1 4148
TR1 BC239C
R9 1K
R20 5K6
R5 1K
C19 100N
R4 1K
IC4-B TL072
CN3
R13 3K3
R19 8K2
R21 1K
LGND
10KB
10KB
MODULATION PITCH BENDER

PCB# 315113
PCB#315153

DRW G.BOCCATO	DWG# 550160	PCB# 315113, 315153	GENERALMUSIC S.p.A. ITALY
CKD G.CONSORTE	DSK# 65 PART: 1/1	SCHEMATIC DIAGRAM CONTROL INTERFACE BOARD CONTROLS PANEL BOARD	ALL RIGHTS ARE RESERVED, NO COPIES OR REPRODUCE THIS DOCUMENT WITHOUT WRITTEN CONSENT BY GENERALMUSIC.
APP. G.CONSORTE	REV: 01-10-98		

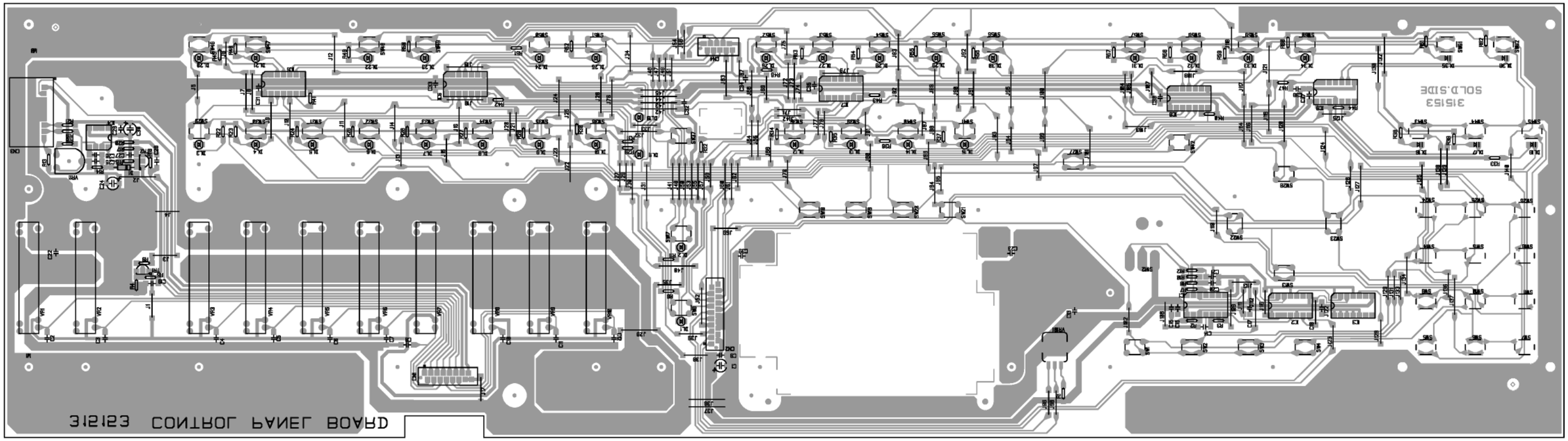

CONTROLS PANEL BOARD reverse layout (PCB#315153)

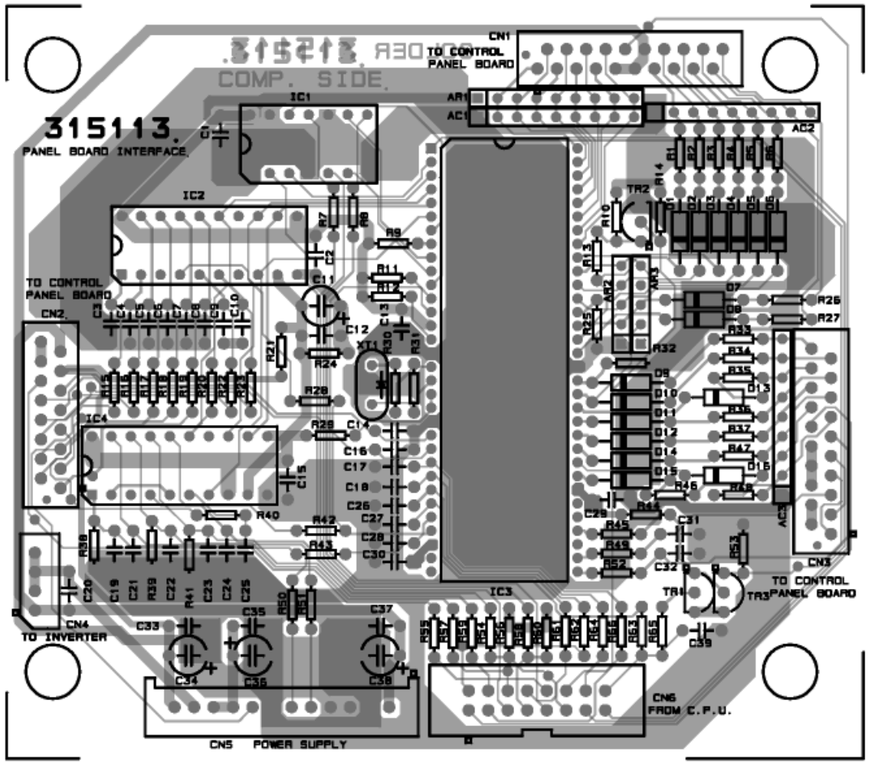

CONTROLS INTERFACE BOARD (PCB#315113)

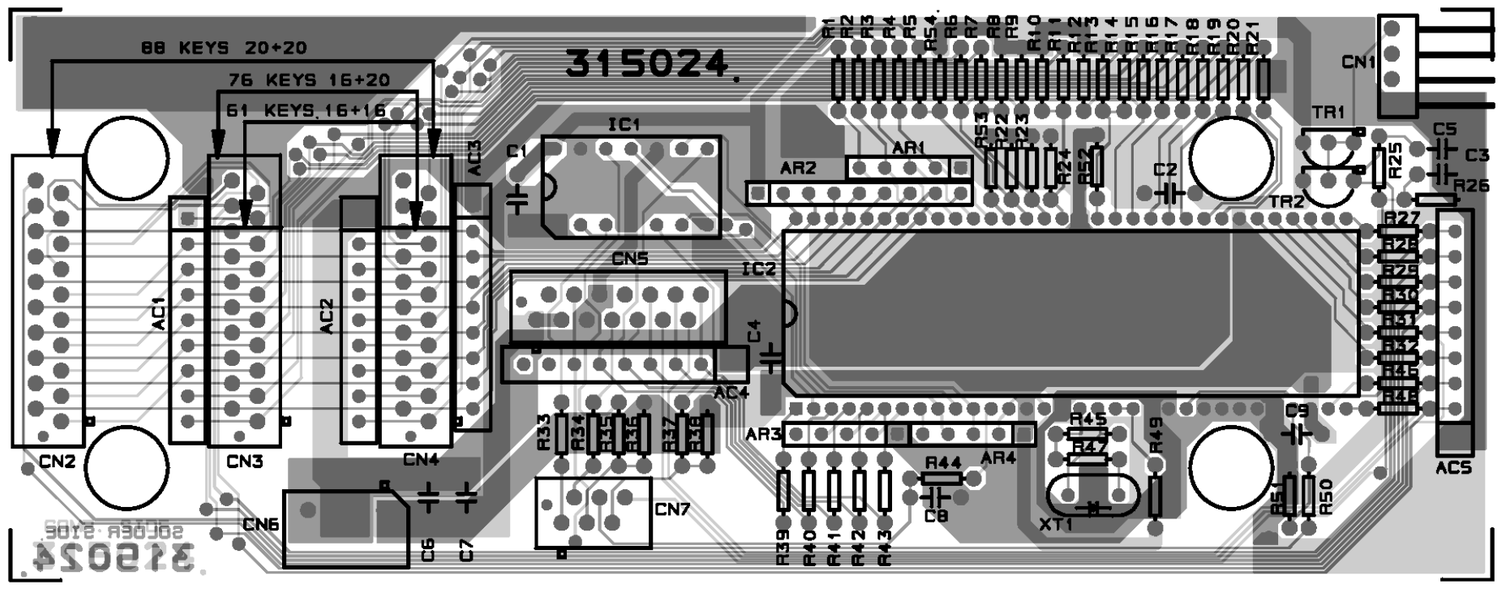

KEYBOARD INTERFACE BOARD (PCB#315024)

DRW: BOCCATO	DWG: 315024 315113-153	SCHEMATIC DIAGRAM EQUINOX	GENERALMUSIC S.p.A. Italy
CKD: RICCOBELLI	DISK: 65 PART: 1/1	Controls Panel, Controls Interface and Keyboard Interface Board Pcb Layouts	ALL RIGHTS ARE RESERVED. NO COPIES OR REPRODUCE THIS DOCUMENT WITHOUT WRITTEN CONSENT BY GENERALMUSIC.
APP: PANNELLI	REV: 25-05-98		

761094 - 2Mbyte DRAM MODULE

SUPPLIED WITH THE HARD DISK
OR AS OPTIONAL "2MBYTE BACKED SAMPLE DRAM KIT"

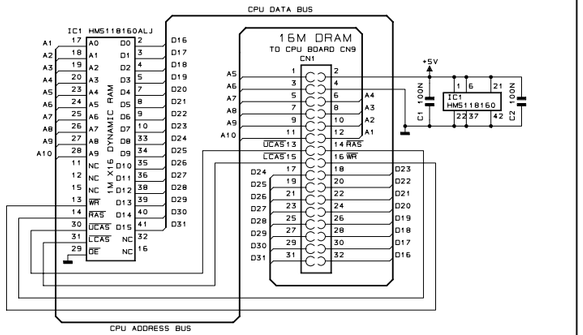

761182 - CPU & SOUND GENERATOR BOARD

(PART 1 OF 2)

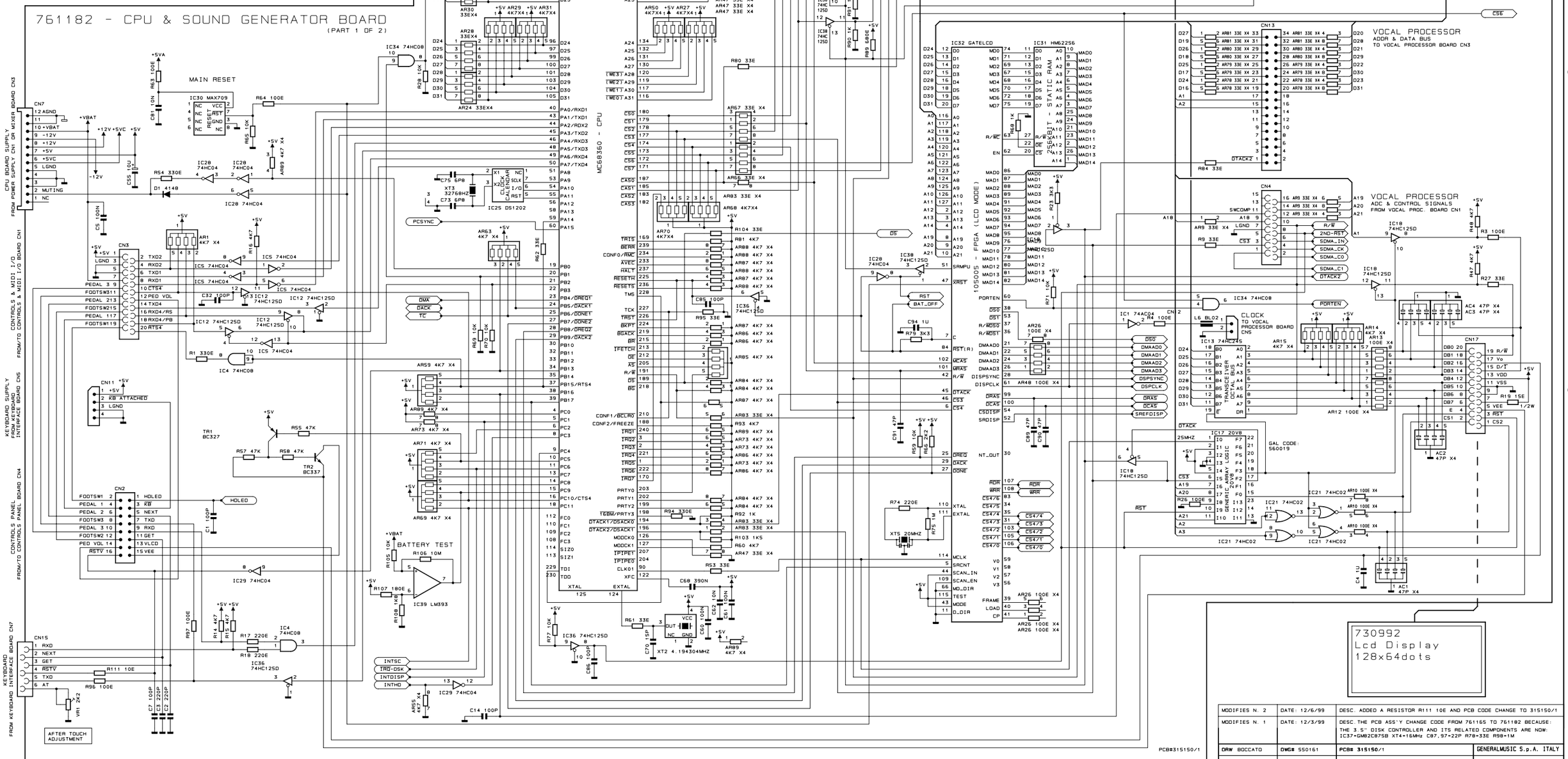

MODIFIES N. 2	DATE: 12/6/99	DESC. ADDED A RESISTOR R111 10E AND PCB CODE CHANGE TO 315150/1	
MODIFIES N. 1	DATE: 12/3/99	DESC. THE PCB ASS'Y CHANGE CODE FROM 761165 TO 761182 BECAUSE: THE 3.5" DISK CONTROLLER AND ITS RELATED COMPONENTS ARE NOW: IC37=GM82C875B XT4=16MHz C87,97=22P R78=33E R98=1M	
DRW BOCCATO	DWG# 550161	PCB# 315150/1	GENERALMUSIC S.p.A. ITALY
CKD RICCOBELLI	DSK# 6 PART: 1/2	SCHEMATIC DIAGRAM EQUINOX CPU & SOUND GENERATOR BOARD	ALL RIGHTS ARE RESERVED, NO COPIES OR REPRODUCE THIS DOCUMENT WITHOUT WRITTEN CONSENT BY GENERALMUSIC.
APP. CONSORTE	REV: 24-6-99		

761182 - CPU & SOUND GENERATOR BOARD
(PART 2 OF 2)

FLOPPY & HARD DISK INTERFACE

FROM/TO HARD DISK CONNECTOR (OPTIONAL WITH ORDERING CODE: 970224)

SCSI INTERFACE TO SCSI BOARD CN1 (OPTIONAL ACCESSORY)

FLOPPY DISK CONTROLLER

FLOPPY DRIVE

FROM/TO 3.5" DISK DRIVE

DSP DATA BUS

DSP ADDR BUS

DISP3 - DIGITAL SOUND PROCESSOR

SIMM MODULES

SAMPLES DRAM MODULE (OPTIONAL ACCESSORY)

NOTE THE SIMM MODULE COMPATIBLES ARE:
1MBYTE (X8 OR X9) 30-PIN 70nS MAXIMUM ACCESS TIME
4MBYTE (X8 OR X9) 30-PIN 70nS MAXIMUM ACCESS TIME
16MBYTE (X8 OR X9) 30-PIN 70nS MAXIMUM ACCESS TIME
THE MODULES MUST BE TWO.
ALL MODULES ARE PURCHASABLE C/O COMPUTERS SHOP, OTHERWISE CAN BE REQUIRED FROM GENERALMUSIC.
ONLY THE "8MBYTE SIMM DRAM" KIT IS AVAILABLE WITH ORDERING CODE 970225. INCLUDES TWO 4MBYTE MODULES.

J1	A - BUFFER MODULES B - SIMM MODULES IF NONE MODULES ARE INSTALLED ON LOCATIONS SIMM17 & SIMM18 J1 POSITION IS NOT IMPORTANT
J2	8MB = 8Mbyte 4Msamples DRAM MODULE 2MB = 2Mbyte 1Msamples DRAM MODULE IF NONE MODULE IS INSTALLED ON LOCATION CN5, J2 POSITION IS NOT IMPORTANT

NOTE: INSTALL SIMM INSTEAD BUFFERS MODULES IF THE KEYBOARD HAS BOTH A/V & SIMM KITS ON IT.

DAC CONVERTERS SUPPLY

(TO MASTER RESET)

PCB# 315150

761093 - BUFFER MODULE
(SUPPLIED WITH OPTIONAL "VOCAL PROCESSOR KIT")

731009 - GND-SHIELD BOARD

PCB# 315164

PCB# 315023

761168
8MByte DRAM MODULE

PCB# 315152

DRW BOCCATO	DWG# 550162	PCB# 315150	GENERALMUSIC S.p.A. ITALY
CKD RICCOBELLI	DSK# 65 PART: 2/2	SCHEMATIC DIAGRAM EQUINOX CPU & SOUND GENERATOR BOARD	ALL RIGHTS ARE RESERVED, NO COPIES OR REPRODUCE THIS DOCUMENT WITHOUT WRITTEN CONSENT BY GENERALMUSIC
APP.PANNELLI	REV: 12-3-98		

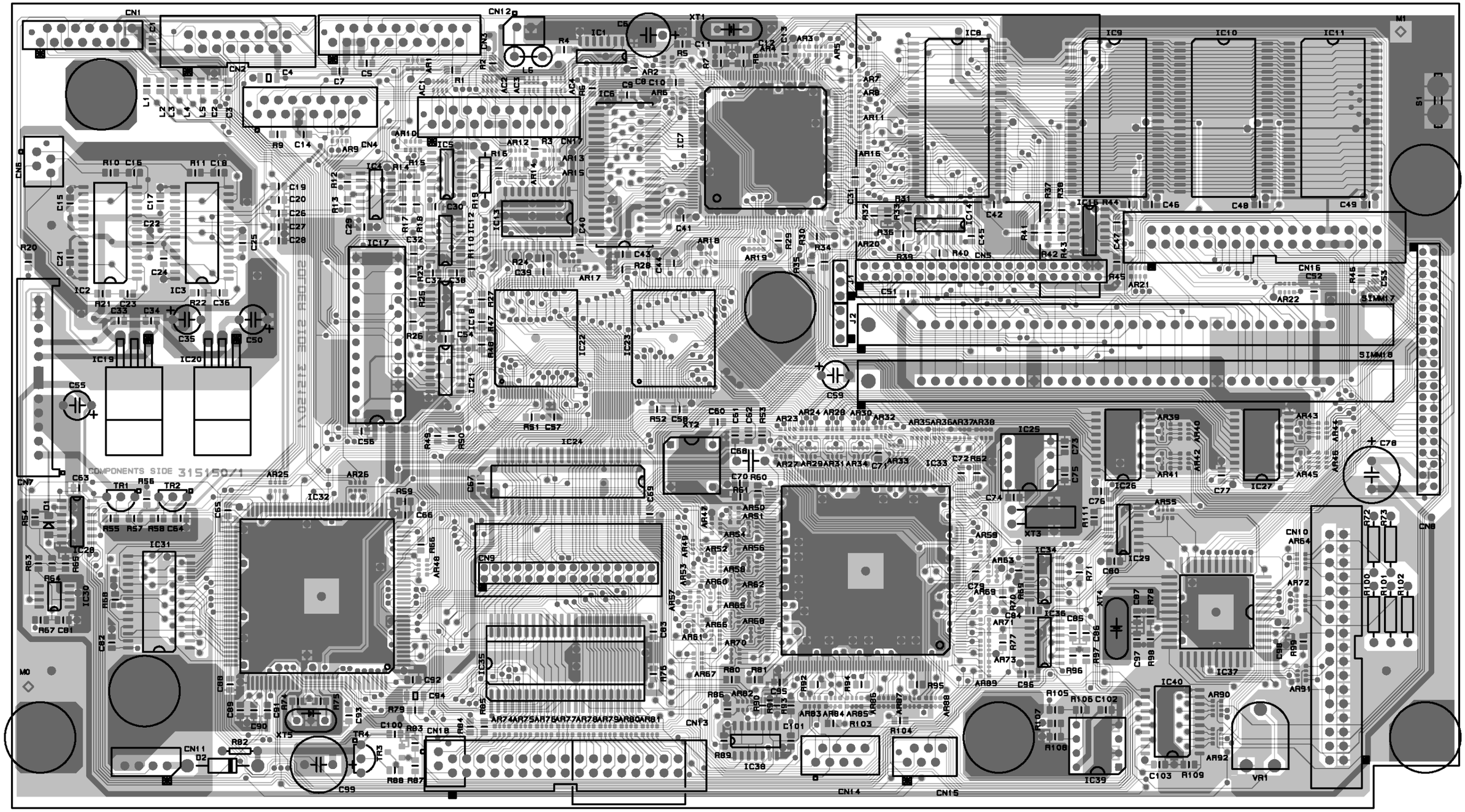

CPU & SOUND GENERATOR BOARD (PCB#315150)

DRW: BOCCATO	DWG: 315150	SCHEMATIC DIAGRAM EQUINOX	GENERALMUSIC S.p.A. Italy
CKD: RICCOBELLI	DISK: 65 PART: 1/1	Cpu & Sound Generator Board Pcb Layout	ALL RIGHTS ARE RESERVED, NO COPIES OR REPRODUCE THIS DOCUMENT WITHOUT WRITTEN CONSENT BY GENERALMUSIC.
APP: PANNELLI	REV: 07-10-98		

CN2 - to Controls Panel Board

CN3 - to MIDI I/O Board

J1 - Set the jumper as follow:
1-2 "A" if Buffer modules are installed
2-3 "B" if SIMM DRAM modules are installed
note: the buffer modules are supplied with Vocal processor kit, if neither buffer or Simm modules are installed, J1 position is ininfluent.

J2 - Set this jumper as follow:
1-2 for 8MB SAMPLE DRAM expansion
2-3 for 2MB SAMPLE DRAM expansion
if no DRAM expansion is installed the jumper position must be 1-2.

CN17 to Lcd Display

CN4 & CN12 to Vocal Processor Board

CN5 - SAMPLE DRAM Expansion
Two sizes are available:
970213 - 2Mbyte (32pins)
970331 - 8Mbyte (44pins)

CN6 - to Power Supply or Mixer Board

Ground Connection

CN16 - SCSI Expansion

CN8 - HARD DISK Expansion
970207 - Optional mounting kit
970333 - Power Station Kit (HD unit)

CN7 - from Power Supply Board

SIMM DRAM Expansion Slots,
These modules must be two as:
1M x8 or x9 70nS 30-pins
4M x8 or x9 70nS 30-pins
only 4Mx2 are available from Generalmusic as code 970225

CN10 - to 3.5" Disk Drive

CN11 - to Keyboard Interface Board

CN9 - 2Mbyte DRAM expansion supplied with Hard Disk mounting kit

CN13 - to Vocal Processor Board

CN15 - from Keyboard Interface Board

VR1 - After Touch Adjustment

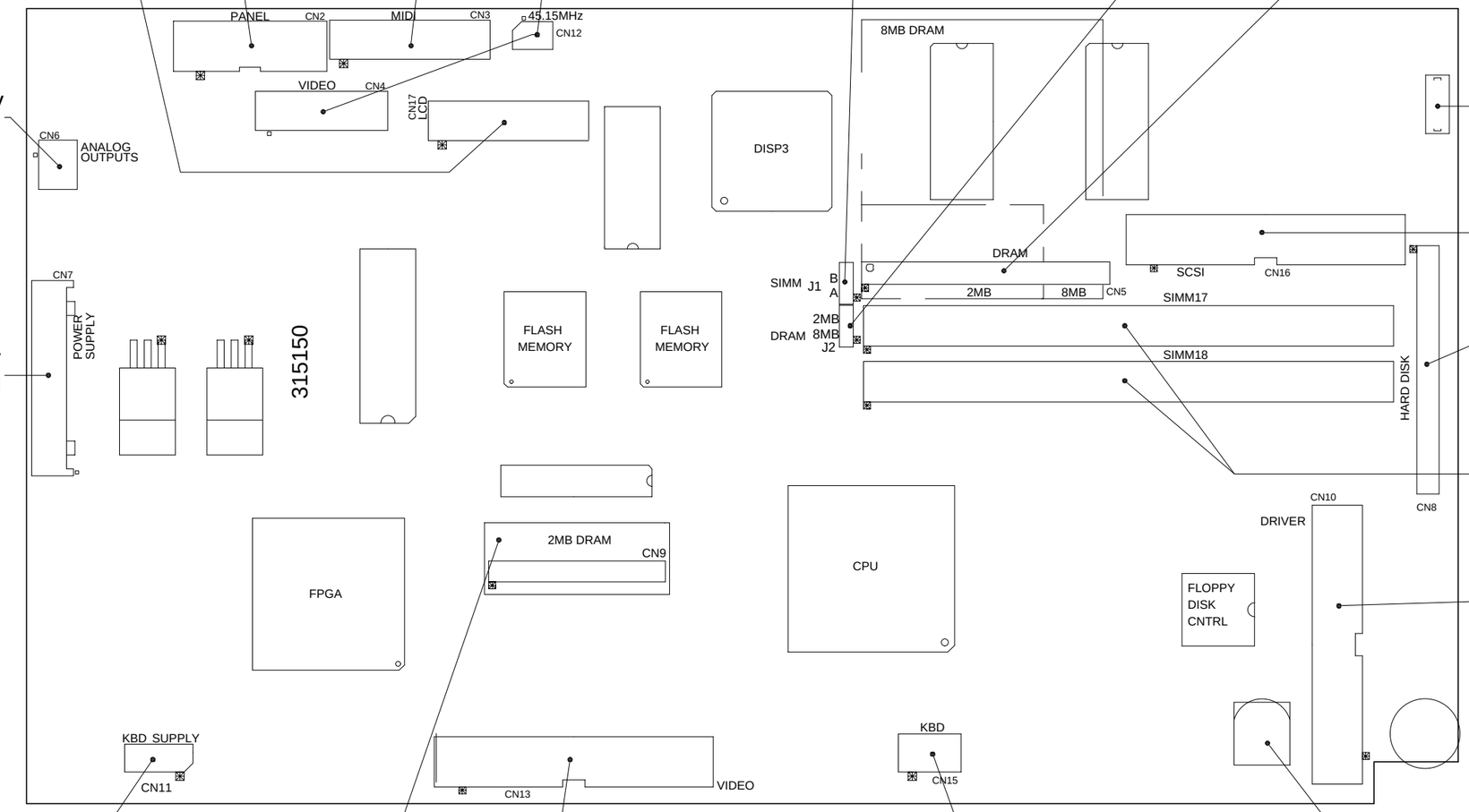

DRW G.Boccato	DWG# 550163	PCB#	GENERALMUSIC S.p.A. ITALY
CKD N.Riccobelli	DISK: 65 PRT: 1/1	Cpu & Sound Generator Board Equinox User Map	ALL RIGHTS ARE RESERVED. NO COPIES OR REPRODUCE THIS DOCUMENT WITHOUT WRITTEN CONSENT BY GENERALMUSIC
APP. Pannelli	REV: 09/10/98		

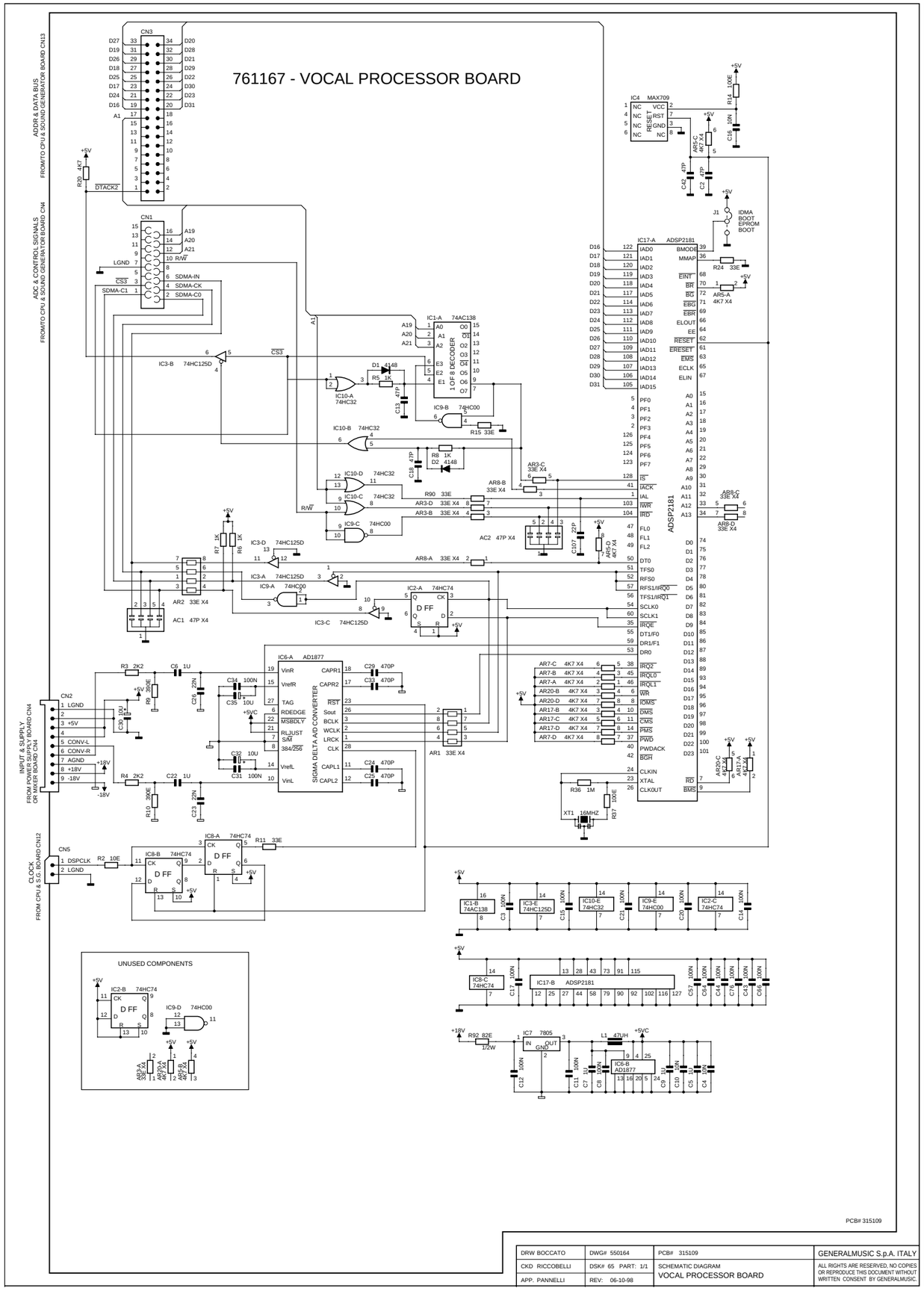

DRW BOCCATO	DWG# 550164	PCB# 315109	GENERALMUSIC S.p.A. ITALY
CKD RICCOBELLI	DSK# 65 PART: 1/1	SCHEMATIC DIAGRAM VOCAL PROCESSOR BOARD	ALL RIGHTS ARE RESERVED, NO COPIES OR REPRODUCE THIS DOCUMENT WITHOUT WRITTEN CONSENT BY GENERALMUSIC.
APP. PANNELLI	REV: 06-10-98		

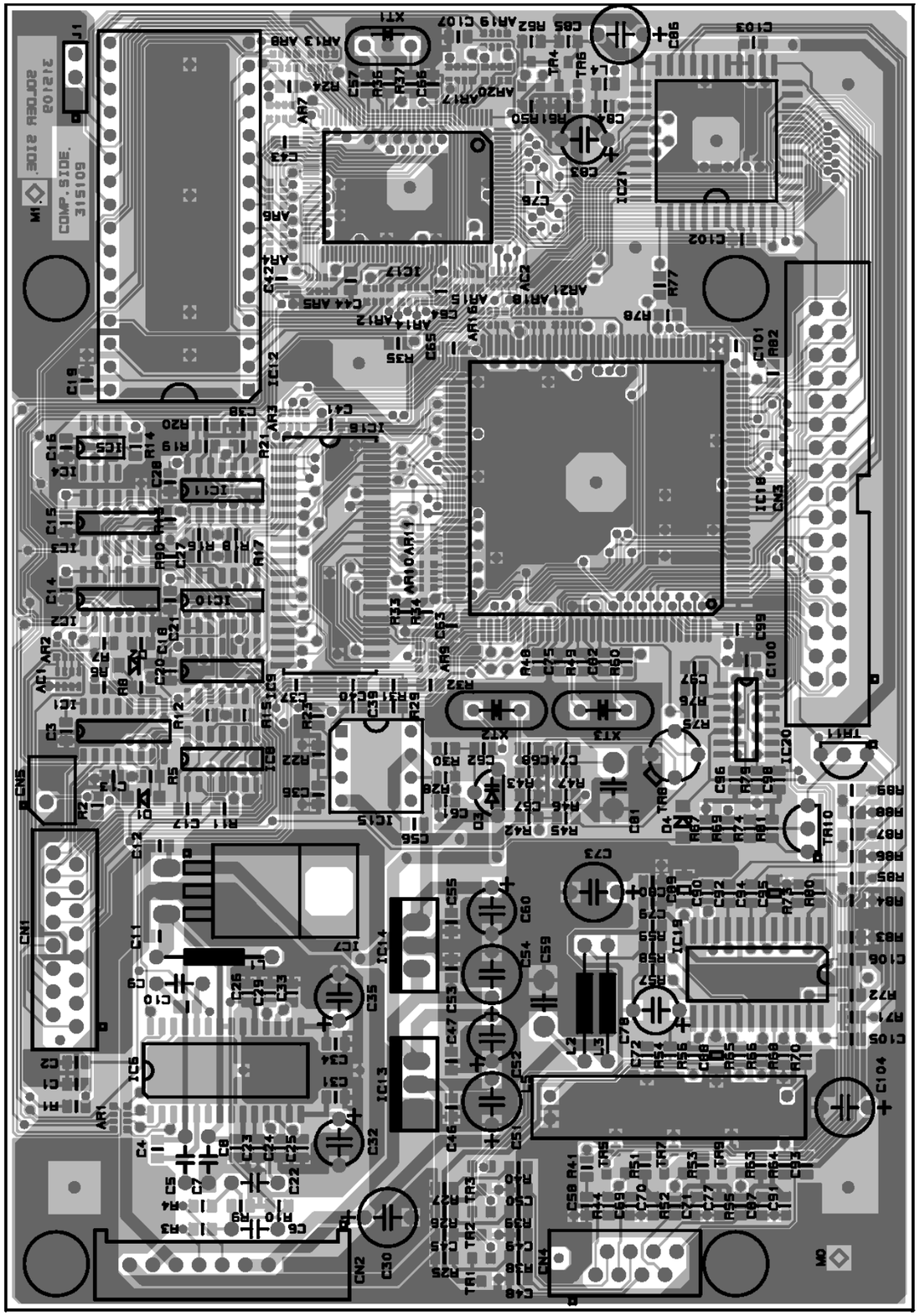

VOCAL PROCESSOR BOARD (PCB#315109)

DRW: BOCCATO	DWG: 315109	SCHEMATIC DIAGRAM EQUINOX	GENERALMUSIC S.p.A. Italy
CKD: RICCOBELLI	DISK: 65 PART: 1/1	Vocal Processor Board Pcb Layout	ALL RIGHTS ARE RESERVED, NO COPIES OR REPRODUCE THIS DOCUMENT WITHOUT WRITTEN CONSENT BY GENERALMUSIC.
APP: PANNELLI	REV: 25-05-98		

Test Procedure and Adjustment

The procedures that follow must be executed subsequently in the order specified.
These procedures are not intended to repair a fault but only to check the correct instrument operations after a repairing execution.

Test Instruments

☑ Dual trace oscilloscope
☑ Digital Multimeter

Accessories

☑ 8Mbyte DRAM module
☑ 2Mbyte DRAM module
☑ 2 x 4Mbyte SIMM DRAM modules
☑ 1 Hard Disk Kit
☑ 1 Vocal Processor Kit
☑ 1 3.5inch Diskette
☑ 1 SCSI Kit
☑ Read/write JOMEGA ZIP SCSI device
☑ RS232 loopback (terminal 1-2 and 3-5 shorted)
☑ 2 jack-jack cables with a resistor divider inside plugs (10K/82ohm).

To check completely the keyboard are necessaries all the optional accessories installed, normally this keyboard have installed from the manufacturer the 2Mbyte DRAM module only.

Setup

Install all the optional accessories: Hard disk and its 2Mbyte module (CN9), 8Mbyte module instead the pre-installed 2Mbyte module on Sample Dram connector CN5, the 2 SIMM modules, the SCSI and the Vocal processor kits, insert the diskette into 3.5" disk drive.
Set the jumpers on CPU board as follow: J1 at position B and J2 at position 8MB.
Set the JP1 and JP2 jumpers on Supply or Mixer board at position A.
Connect the R and L outputs to the MIC/LINE inputs using the appropriate cable.
Connect the external JOMEGA ZIP SCSI device to the SCSI socket.
Plug the RS232 loopback into the socket.

Checks and Adjustments

☑ Aftertouch

To adjust the keyboard aftertouch locate the VR1 trimmer on CPU board, connect the scope CH1 probe tip to its center terminal, probe clip connected at ground, adjust VR1 to obtain an excursion from 0 to 5V every time a note key is pressed with different pressure, or to obtain a better adjustment follow the instructions on ADJUSTMENT TABLE (page 8).

☑ MIDI, RS232 and RS422 mode

Press MIDI, MASTER (F3), PC I/O (F3), set PC1 with DIAL and press ENTER, set LOCAL to OFF (F1), verify that the keyboard plays thru RS232 by unplugging and re-inserting the RS232 loopback into the socket.
Press MIDI and F3 twice, rotate the DIAL to set "MACINTOSH", check the 1MHz clock appear on pin 1 of COMPUTER socket (use the second probe tip to do that).

☑ Panel Key and Led

Press SYSTEM, OTHER (F4), INFO (F1) and F4 the display show a warning message: press ENTER and PANEL (F3) and then press all the panel buttons checking their operation on display, at the same time every led of pressed button must light up, except DISK led.

☑ Pitch Bend and Modulation Wheels

Rotate the Modulation wheel verifying the excursion displayed, it ranges from 0 to 127.
Rotate the Pitch Bender wheel verifying the excursion displayed, it ranges from 0 to 127 with 64 on center position, a slightly difference may be adjusted by VR11 on Controls panel board, major differences may be adjusted repositioning the knob or the potentiometer.
Press ENTER and ESCAPE simultaneously to return to HARDWARE test menu.

☑ Memories and Optional Accessories

Press DEVICE (F1), the instrument self-test check subsequently the follow devices: SIMM modules (VDRAM), 8Mbyte sample dram (BDRAM), 3.5" disk drive (FD), SCSI interface (SCSI) and hard disk (HD) marking with "pass" all devices checked successfully, with "np" all devices not present, with "fault" all device defective. Theoretically all test must be passed, if you have a mistake on a device re-check its installation.
Press ENTER if necessary.

☑ Inputs, Dsp and Vocal Processor

Put MASTER - INPUT - LEVEL sliders to maximum position and rotate full clockwise GAIN1 and GAIN2 potentiometer located on the rear side.
Measure a sinusoidal signal at 4Vpp on OUT 1 and OUT 2 outputs sockets (the 1KHz tone gets out OUT R and L, re-input thru MIC 1 and 2 by the appropriate cable, pass thru DSPs and finally get out from OUT 1 and 2).
Turn off the signal by means SIGNAL (F4).

☑ Noise level

Turn off the instrument, disconnect the signal cable, wait at least 30 seconds, turn on again the keyboard and check the noise level is acceptable (if not verify the insulation between electrical and chassis ground is at least 40Kohms).

☑ Data Hold

Press SYSTEM, OTHER (F4), INFO (F1), F4 , ENTER and DHOLD (F2) and then wait until the display show PASS.
Turn off the keyboard and then remove not included optional kits (the EQUINOX base version is equipped with 2Mbyte SAMPLE DRAM only), restore the jumpers positions: J1 to A, J2 to 2MB, JP1 & 2 to B. Turn on again the instrument and verify, repeating the test, that only BDRAM pass.

☑ Final

Verify the keyboard correct operation playing something on it, and finally launch the Sounds sequence pressing PROGRAM, SHUFFLE (F4), MAKE (F1). When it is finished you have tested the keyboard.

☑ Reliability Check

Before reassembling the instrument and before deliver it to the user, it is a goal verify its reliability:
To do that switch it off, or leaving it switched on but operating with greatest caution, carefully shake the boards and connections inside it using an insulated tool (for example the handle of the screwdriver) to find wrong contacts and so on.
Turn on the instrument and verify that it operates correctly repeating the Final Check.
Disconnect the instrument from the mains, reassemble it and shake it carefully without causing aesthetics damages, reconnect it to the mains, turn on and re-check its functionality, finally leave it switched on for a long time verifing its functionality occasionnally.

Spare Part List

Legend	
EU	=Specify European Version (230Vac)
US	=Specify U.S. Version (115Vac)
61N	=only for model with 61 Notes
76N	=only for model with 76 Notes
GEM	=Specify GEM Brand Version
GM	=Specify Generalmusic Brand Version
1	=1st Version with Traditional supply circuit
2	=2nd Version with Switching supply circuit

The 1st and 2nd versions differ only by supply unit and its related circuits, these are also recognizable by the code imprinted on the rear label, where 1st versions are:

995155	Equinox 61N GEM Brand 230Vac (EU)
995156	Equinox 61N Generalmusic Brand 115Vac (US)
995157	Equinox 76N GEM Brand 230Vac (EU)
995158	Equinox 76N Generalmusic Brand 115Vac (US)

and 2nd versions are:

995167	Equinox 61N GEM Brand 115-230Vac
995168	Equinox 61N Generalmusic Brand 115-230Vac
995169	Equinox 76N GEM Brand 115-230Vac
995170	Equinox 76N Generalmusic Brand 115-230Vac

Ref	Code		Description
			Accessories
	970329		Owner's Manual (English Version)
	970328		Owner's Manual (Italian Version)
	955913		Operating System Disk
	955912		Demo Disk
	300617		Owner's Manual Folder
	130276		Mains Cable (US)
	130274		Mains Cable (EU)
			Optional Accessories
	970124		**Carring Bag (61N)**
	970125		**Carring Bag (76N)**
	970110		**X-Metal Stand**
	970300		**50+50W Amplified Stand (EU)**
	970311		**50+50W Amplified Stand (US)**
	970116		**Single Foot Switch**
	970080		**Triple Foot Switch**
	970134		**Piano Single Foot Switch**
	970107		**Volume Pedal**
	970084		**Dynamic Pedalboard**
	130301		**2mt Midi Cable**
	970310		**Multimedia Kit**
	130429	*	3mt RS232 Cable (MiniDin 8 To D-Sub 9)
	970207		**Hard Disk Installation Kit**
20	**970333**		**Power Station Kit (970207 included)**
	761094	*	2Mbyte Backed Dram Module
	561006	*	2Gbyte Equinox Hard Disk Unit with Various Contents
17	340905	*	Rubber Suspension
18	120029	*	M3x6mm Screw
19	120451	*	M3 Washer
22	**970213**		**2Mbyte Backed Samples Dram**
23	**970331**		**8Mbyte Backed Samples Dram**
16	**970330**		**SCSI Interface Kit**
21	**970225**		**Volatile SIMM Dram**
	100742	*	4MByte SIMM Module
24	**970334**		**Vocal Processor Kit**
	841152	*	34 Wires 5cm Length Flat Cable
	841030	*	16 Wires 5cm Length Flat Cable
	840202	*	9 Wires 10cm Length Flat Cable
	841025	*	2 Wires 10cm Length Screened Cable
	761093	*	Buffer Module Board (Pcb# 315023)
	103013	**	74HC138D SOIC 1 Of 8 Decoder
	103003	**	74HC374DW SOIC Octal D-Type Flip-Flop
	761167	*	Vocal Processor Board (Pcb# 315109)
	230561	**	47uH 10% 100mA RF-Coil
	141016	**	16 Contacts Vert Female Connector
	140917	**	2 Contacts Vert Male Connector
	140866	**	34 Contacts Vert Male Connector
	140324	**	9 Contacts Vert Male Connector
	106003	**	MAX709 Power Monitor With Reset
	105010	**	ADSP2181 Dsp Microcomputer
	103031	**	74HC00D SOIC Quad Nand Gate
	103030	**	74HC32D SOIC Or Nand Gate
	103012	**	74HC125D SOIC Quad Tri-State Buffer
	103011	**	AD1877 SOIC Dual Channel 1bit ADC
	103007	**	74HC74D SOIC Dual Flip-Flop
	101500	**	74AC138D SOIC 1 Of 8 Decoder
	100059	**	7805 +5V 1A Voltage Regulator
	081000	**	PMLL4148 Smd 100mA 75V Signal Diode
	271230	*	Vocal Processor Owner's Manual Addendum
	120003	*	M3x8mm Screw
			Cabinet Assembly
			Bottom Assembly
	731009		Gnd-Shield Board (Pcb#315164)
31	660455		Bottom Chassis (61N)(1)
31	660459		Bottom Chassis (76N)(1)
31	660463		Bottom Chassis (61N)(2)
31	660464		Bottom Chassis (76N)(2)
29	652734		Left Side
30	652733		Right Side
	340357		Spacer For Left & Right Side
	340435		Adhesive Foot
			Top Assembly
40	660454		Top Chassis with "GEM" Logo (61N)(1)
40	660456		Top Chassis with "GM" Logo (61N)(1)
40	660458		Top Chassis with "GEM" Logo (76N)(1)
40	660460		Top Chassis with "GM" Logo (76N)(1)
40	660465		Top Chassis with "GEM" Logo (61N)(2)
40	660466		Top Chassis with "GM" Logo (61N)(2)
40	660467		Top Chassis with "GEM" Logo (76N)(2)
40	660468		Top Chassis with "GM" Logo (76N)(2)
68	660453		SCSI Slot Closer
66	652749		Dual Slider Potentiometer Support
65	652748		Octal Slider Potentiometer Support
64	652735		Display Screen
32	652732		Left-Top Plastic Chassis
41	652731		Right-Top Plastic Chassis
	340586		Insulant Spacer
58	340572		Led Light Diffuser
63	340570		Arrow Actuator
	340566		Back-plate for Controls Panel
	340556		Polycarbonate Washer for Dial
	340542		Controls Lower Spacer
	340521		Dial Support
62	340493		Dial Knob
56	340372		Led Light Diffuser for Actuator
61	340370		Contrast Knob
57	340369		6x15mm Push Cap
59	340368		6x8mm Push Cap
67	340367		Slider Knob
60	340365		"Enter/Escape" Push Cap
	340186		Adhesive Cable Fixing
	340092		5mm Board Spacer
10	171583		3 Din Sockets Reinforcement
8	171472		Analog I/O Board Support
11	171454		Controls Interface Board Support
13	171451		4 Jack Sockets Reinforcement
9	171450		6 Jack Sockets Reinforcement
	171444		"Enter/Escape" Reinforcement
	171438		Controls Panel Spacer
12	171424		4 Din Sockets Reinforcement
	171397		Spacer For R-Top Plastic Chassis
	171396		Spacer For L-Top Plastic Chassis
	171004		Right Disk Drive Support
	171003		Left Disk Drive Support
	120960		Dial Steel Sphere
35	110400		3.5" Disk Drive
39	110254		Rotary Encoder With Snap
			Mains Filter & Transformer Assembly (1)
	730681		Mains Switch Assembly
69	340359	**	Power Switch Frame
	171008	**	Mains Socket & Power Switch Support
1	110614	**	Mains Socket
2	110285	**	Power Switch
4	**767988**		**Mains Filter Board (Pcb#315014) (EU) (1)**
4	**768006**		**Mains Filter Board (Pcb#315014) (US) (1)**
	230568	*	10mH 250Vac 1A AC Line EMI Coil "Siemens"
	140010	*	3 Contacts P=10 Vert Terminal Block
	110113	*	Fuse Clip 5x20mm 6A max (EU)
	110114	*	Fuse Clip 6.3x32mm 10A Max (US)
	020493	*	100n 250Vac MKP EMI Capacitor "Siemens"
	010545	*	4n7 250V Ceramic Capacitor (Iec-Ul-Csa)
5	**230127**		**Transformer 230Vac 120W (EU) (1)**
5	**230129**		**Transformer 115Vac 120W (US) (1)**
	110011		T1A Fuse 5x20mm (EU) (1)
	110083		T2A Fuse 6.3x32mm (US) (1)
			Power Supply Board (1)
6	**730993**		**Power Supply Board (Pcb#315116) (1)**
	230524	*	100uH Switching Coil
	141015	*	14 Contacts Vert Female Connector
	141010	*	4 Contacts Vert Female Connector
	140874	*	Single In Line Vert Male Strip (specify contacts)

	140873	*	4 Contacts Vert Male Connector
	140325	*	12 Contacts Vert Male Connector
	140324	*	9 Contacts Vert Male Connector
	140323	*	6 Contacts Vert Male Connector
	140010	*	3 Contacts P=10 Vert Terminal Block
	110305	*	Relay 12V / 2 Switch 1A 250V
	110119	*	Fuse Clip 10A max (EU) (US)
	100955	*	LM2576 5V 3A Switching Regulator
	100906	*	CEM3381 Dual V.C.A.
	100061	*	TL072 Dual J-Fet Operational Amplifier
	100045	*	7812 +12V 1A Voltage Regulator
	100043	*	7912 -12V 1A Voltage Regulator
	090183	*	BC550 TO92 LN Npn Transistor
	090153	*	BC327 TO92 Pnp Transistor
	090152	*	BC337 TO92 Npn Transistor
	080606	*	GBU8D 8A Rectifier Diodes Bridge
	080171	*	FE6B 6A 100V Fast Recovery Diode
	080103	*	1N4148 100mA 75V Signal Diode
	030950	*	470u 16V 20% Low Esr Vert Electrolytic Capacitor
	030554	*	4700u 35v 20% Snap-In Electrolytic Capacitor
	110021		T5A Fuse 6.3x32mm (US)
	110020		T5A Fuse 5x20mm (EU)

Mains Filter & Switching Supply Assembly (2)

	730681		Mains Switch Assembly
69	340359	**	Power Switch Frame
	171008	**	Mains Socket & Power Switch Support
1	110614	**	Mains Socket
2	110285	**	Power Switch
45	230532		EMI Choke Coil (2)
44	**731011**		**SNP9541M 40W Switching Supply Unit (2)**
	110010		T2A Fuse 5x20mm (EU) (US) (2)

Mixer Board (2)

43	**731016**		**Mixer Board (Pcb#315151) (2)**
	141102	*	6 Contacts Vert Male Connector
	141015	*	14 Contacts Vert Female Connector
	141010	*	4 Contacts Vert Female Connector
	140877	*	Jumper For Contacts Strip (p=2.54mm)
	140874	*	Single In Line Vert Male Strip (specify contacts)
	140873	*	4 Contacts Vert Male Connector
	140325	*	12 Contacts Vert Male Connector
	140324	*	9 Contacts Vert Male Connector
	140323	*	6 Contacts Vert Male Connector
	110305	*	Relay 12V / 2 Switch 1A 250V
	100906	*	CEM3381 Dual V.C.A.
	100061	*	TL072 Dual J-Fet Operational Amplifier
	090183	*	BC550 TO92 LN Npn Transistor
	090153	*	BC327 TO92 Pnp Transistor
	090152	*	BC337 TO92 Npn Transistor
	080103	*	1N4148 100mA 75V Signal Diode

Phones Board

28	**730678**		**Phones Board (Pcb#315118)**
	230569	*	FL5R200PNT EMI Coil For Signal
	140361	*	6 Contacts Vert Male Pass-Thru Connector
	140217	*	Jack Stereo Slim Horizontal Socket

Keyboard Assembly

	720554		**61N Keyboard Assembly with Interface**
	720555		**76N Keyboard Assembly with Interface**
	840808	*	16 Wires 30cm Length Flat Cable
	840807	*	16 Wires 20cm Length Flat Cable (61N)
	841064	*	2 Wires 17cm Length Crimp Terminal Cable (76N)
	840838	*	20 Wires 15cm Length Flat Cable (76N)
27	**761059**	*	**Keyboard Interface Board (Pcb#315024) (61N)**
27	**761137**	*	**Keyboard Interface Board (Pcb#315024) (76N)**
	230569	**	FL5R200PNT EMI Coil For Signal
	141018	**	20 Contacts Vert Female Connector
	141016	**	16 Contacts Vert Female Connector
	141011	**	6 Contacts Vert Female Connector
	140890	**	4 Contacts Hor Male Single-Strip
	140872	**	4 Contatcs Hor Male Connector
	140918	**	2 Contacts Hor Male Connector
	100740	**	HD6433278 Cpu F=20MHz
	100605	**	74HC125 Quad 3-State Buffer
	090194	**	BC560 TO92 LN Pnp Transistor
	010725	**	20MHz Ceramic Resonator With Capacitors
26	**730680**	*	**Connection Board (Pcb#315114) (76N)**
	140918	**	2 Contacts Hor Male Connector
	140890	**	4 Contacts Hor Male Single-Strip
	720556	*	Keyboard Assembly (61N)
	720557	*	Keyboard Assembly (76N)
	810554	**	**29 Contacts Right Board (Pcb#310536) (61N)**
	810557	**	**44 Contacts Right Board (Pcb#310566) (76N)**
	340211	***	12 Dual Contact Rubber Strip
	141018	***	20 Contacts Vert Female Connector
	141016	***	16 Contacts Vert Female Connector
	080103	***	1N4148 100mA 75V Signal Diode
	810553	**	**32 Contacts Left Board (Pcb#310535) (61N)**
	810556	**	**32 Contacts Left Board (Pcb#310565) (76N)**
	340211	***	12 Dual Contact Rubber Strip
	141016	***	16 Contacts Vert Female Connector
	080103	***	1N4148 100mA 75V Signal Diode
	500073	**	Mechanical Parts (61N)
	500076	**	Mechanical Parts (76N)
	160215	***	Key Return Spring
	151216	***	First E Key (76N)
	151215	***	Last G Key (76N)
55	151213	***	Last C Key (61N)
54	151212	***	Sharp Key
53	151211	***	B Key
52	151210	***	A Key
51	151209	***	G Key
50	151208	***	F Key
49	151207	***	E Key
48	151206	***	D Key
47	151205	***	C Key

Pitch & Modulation Assembly

34	**720553**		**Pitch & Modulation Assembly**
	840726	*	9 Wires 40cm Length Flat Cable
46	340568	*	Wheel
	340331	*	Sheath For Spring
	210264	*	Black Felt
	171460	*	Wheel Support
	160166	*	Return Spring
	120554	*	Lock Washer
33	074700	*	4K7 Linear Rotative Potentiometer

Controls Panel Board

36	**810669**		**Controls Panel Board (Pcb#315153)**
	141018	**	20 Contacts Vert Female Connector
	141016	**	16 Contacts Vert Female Connector
	141013	**	10 Contacts Vert Female Connector
	140529	**	Microswitch 12V 50mA 0.25mm
	140328	**	9 Contacts Hor Male Connector
	100620	**	74HC86 Quad 2-Input Exor Gate
	100614	**	74HC74 Dual Flip-Flop
	100607	**	74HC164 8bit S To P Shift Register
	100061	**	TL072 Dual J-Fet Operational Amplifier
	090183	**	BC550 TO92 LN Npn Transistor
	080711	**	3mm High Efficiency Red Led
	080103	**	1N4148 100mA 75V Signal Diode
	070702	**	5K Linear Rotary Potentiometer
	070554	**	10K Lin. Slider Potentiometer

Controls Interface Board

37	**761169**		**Controls Interface Board (Pcb#315113)**
	141018	*	20 Contacts Vert Female Connector
	141016	*	16 Contacts Vert Female Connector
	141013	*	10 Contacts Vert Female Connector
	140854	*	16 Contacts Vert Male Connector
	140325	*	12 Contacts Vert Male Connector
	100740	*	HD6433278 Cpu F=20MHz
	100645	*	74HC4351 8ch Analog Multiplexer
	100605	*	74HC125 Quad 3-State Buffer
	090183	*	BC550 TO92 LN Npn Transistor
	090153	*	BC327 TO92 Pnp Transistor
	080103	*	1N4148 100mA 75V Signal Diode
	010725	*	20MHz Ceramic Resonator With Capacitors

Lcd Display Assembly

38	**730992**		**Lcd Display Assembly**
	340456	*	Led Spacer
	315157	*	Lcd Adapter Printed Circuit Board
	141018	*	20 Contacts Vert Female Connector
	140874	*	Single In Line Vert Male Strip (specify contacts)
	080754	*	LMC97S005A Lcd Display 128X64 dots

Controls & Midi I/O Board

14	**761101**		**Controls & Midi I/O Board with Battery**
	751101	*	Controls & Midi I/O Board (Pcb# 315088)
	230569	**	FL5R200PNT EMI Coil For Signal
	141018	**	20 Contacts Vert Female Connector
	140247	**	8 Poles Mini Din Female Socket
	140217	**	Jack Stereo Slim Horizontal Socket
	140216	**	6 Poles Din Horizontal Female Socket
	140212	**	5 Poles Din Horizontal Female Socket
	100734	**	MAX202E RS232 Drivers/Receiver
	100618	**	74HC14 Hex Inverter Schmitt Trigger
	100035	**	6N138 Optocoupler
	090194	**	BC560 TO92 LN Pnp Transistor
	090183	**	BC550 TO92 LN Npn Transistor
	080103	**	1N4148 100mA 75V Signal Diode
15	110300	*	4.8V 280mAh Nicd Battery

Analog I/O Board

7	**730990**		**Analog I/O Board (Pcb#315163)**
	230569	*	FL5R200PNT EMI Coil For Signal
	141015	*	14 Contacts Vert Female Connector
	140217	*	Jack Stereo Slim Horizontal Socket
	140207	*	Jack Horizontal Female Socket
	100919	*	MC33078 Dual LN Operational Amplifier
	080103	*	1N4148 100mA 75V Signal Diode
	070613	*	2X10KC Potentiometer

Cpu & Sound Generator Board

25	**761182**		**Cpu & Sound Generator Board (Pcb#315150)**
	230527	*	BL02RN2-R62 EMI Coil For Signal
	141018	*	20 Contacts Vert Female Connector
	141016	*	16 Contacts Vert Female Connector
	141011	*	6 Contacts Vert Female Connector
	141010	*	4 Contacts Vert Female Connector
	140922	*	32 Contacts Vert Male Strip P=2mm
	140917	*	2 Contacts Vert Male Connector
	140915	*	44 Contacts Vert Male Strip P=2mm
	140913	*	Simm Socket 30 Pin
	140877	*	Jumper For Contacts Strip (p=2.54mm)
	140874	*	Single In Line Vert Male Strip (specify contacts)
	140873	*	4 Contacts Vert Male Connector
	140866	*	34 Contacts Vert Male Connector
	140854	*	16 Contacts Vert Male Connector
	140325	*	12 Contacts Vert Male Connector
	106003	*	MAX709 Power Monitor With Reset
	105009	*	DISP3 QFP Digital Sound Processor (Hitachi)
	105005	*	FPGA - Video/Lcd Controller
	105004	*	MC68360EM25 QFP Cpu
	104039	*	KM23C64000G 64Mbit Rom “System”
	104036	*	MX23C6410 64Mbit Rom “Samples2”
	104035	*	MX23C6410 64Mbit Rom “Samples1”
	104020	*	KM62256CLG SOP 256Kbit SRam Ta=55nS
	104010	*	HM514280AJ 4M5bit Dram Ta=70nS
	104009	*	HM5118160ALJ 16Mbit Dram Ta=70nS
	104007	*	E28F016SV-70 1Mbit Flash Memory Ta=70nS
	103012	*	74HC125D SOIC Quad Tri-State Buffer
	103010	*	74HC04D SOIC Hex Inverter
	103009	*	74HC02D SOIC Quad 2-In Nor Gate
	103004	*	AD1865R SOP 18bit D/A Converter
	103002	*	74HC245DW SOIC Octal Bus Transceiver
	103001	*	74HC08D SOIC Quad 2-Input And Gate
	101506	*	74AC04D SOIC Hex Inverter Gate
	101502	*	74AC125D SOIC Quad Tri-State Buffer
	100904	*	LM393 Dual Comparator
	100733	*	uPD72064 Floppy Disk Controller
	100731	*	DS1202 Clock Calendar
	100059	*	7805 +5V 1A Voltage Regulator
	100058	*	7905 -5V 1A Voltage Regulator
	091000	*	BC847 TO236 Smd Npn Transistor
	090153	*	BC327 TO92 Pnp Transistor
	090152	*	BC337 TO92 Npn Transistor
	081000	*	PMLL4148 Smd 100mA 75V Signal Diode
	080156	*	1N4002 1A 100V Rectifier Diode
	010732	*	4.194304MHz Quartz Oscillator
	010727	*	45.1584MHz Quartz Resonator
	010725	*	20MHz Ceramic Resonator With Capacitors
	010718	*	32MHz Quartz Resonator
	010710	*	32768Hz Quartz Resonator
	560019	*	20V8AS-15HB1 Programmed GAL

Wiring Connections

	841187	20 Wires 20cm Length Flat Cable with Ferrite
	841150	14 Wires 17.5cm Length Flat Cable
	841079	16 Wires 12.5cm Length Flat Cable
	841070	34 Wires 80cm Length Flat Cable
	840848	3 (of 4) Wires 30cm Length Crimp Terminal Cable (61N)
	840707	3 (of 4) Wires 50cm Length Crimp Terminal Cable (76N)
	840838	20 Wires 15cm Length Flat Cable
	840828	20 Wires 7.5cm Length Flat Cable
	840823	10 Wires 10cm Length Flat Cable
	840806	12 Wires 5cm Length Crimp Terminal Cable
	840775	6 Wires 20cm Length Flat Cable (61N)
	841164	6 Wires 7.5cm Length Flat Cable (76N)
	840738	4 Wires 5cm Length Flat Cable
	840587	3 (of 4) Wires 40cm Length Crimp Terminal Cable (61N)(1)
	840707	3 (of 4) Wires 50cm Length Crimp Terminal Cable (61N)(2)
	840607	3 (of 4) Wires 15cm Length Crimp Terminal Cable (76N)(1)
	840676	3 (of 4) Wires 60cm Length Crimp Terminal Cable (76N)(2)
	840529	16 Wires 20cm Length Flat Cable
	840256	12 Wires 20cm Length Flat Cable
	840162	6 Wires 50cm Length Flat Cable (61N)(1)
	840160	6 Wires 40cm Length Flat Cable (61N)(2)
	840164	6 Wires 60cm Length Flat Cable (76N)
	841198	6 Wires 7.5cm Length Crimp Terminal Cable (2)
3	770775	Mains Cables Assembly (1)
3	770852	Mains Cables Assembly (2)

Note:

Each spare part is single quantity unless otherwise specified.
Asterisk prefix explanation:
Omitted = First level spare part.
One asterisk = Second level, part of previous listed first level part.
Two asterisk = Third level, part of previous listed second level part.
Three asterisk = ...
Any request for not above mentioned part must encompass specific description including:
1) Model name,
2) Section name,
3) Module code,
4) Reference name,
5) Quantity number.