2360A, 2365A, 2366A Bi-Radial® Constant Coverage Horns

Professional Series

Key Features:

- Uniform on and off axis frequency response
- Full horn loading to 350 Hz
- Precise horizontal and vertical pattern control
- Uncolored sound quality
- 49 mm (2 in.) throat entry

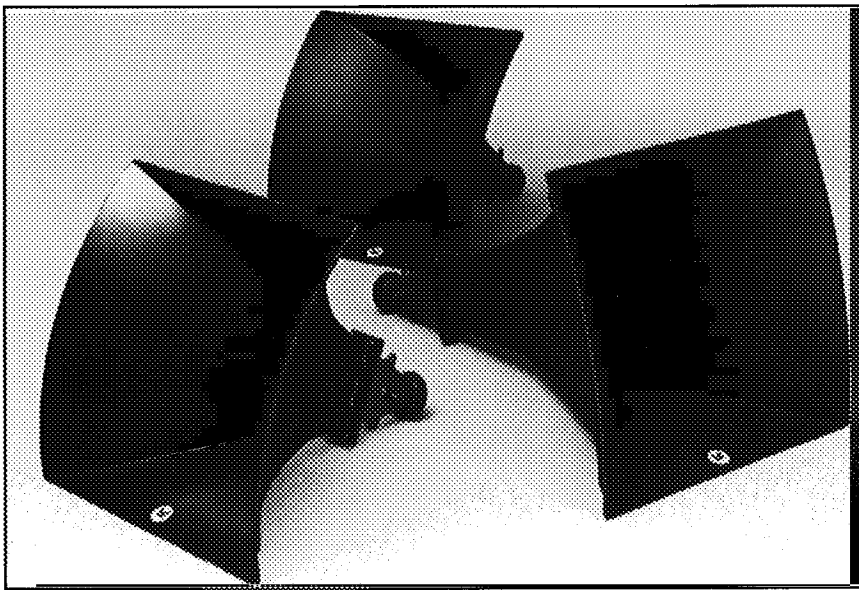

JBL Bi-Radial® horns[1] are designed to provide uniform on and off axis frequency response from below 500 Hz to beyond 16 kHz. The horns' unique geometry and relatively tall vertical mouth dimension ensure precise vertical, as well as horizontal, beamwidth control throughout the rated frequency band. Since both horizontal and vertical coverage patterns remain essentially constant, horn performance may be easily predicted for any given frequency or orientation. Cluster design, therefore, is simplified and the need for horn overlapping is minimized. Typical cluster performance problems such as lobing and comb filter effects are virtually eliminated.

Computer aided design techniques were used to derive the horn contours in the horizontal and vertical planes. Utilizing sidewall contours based on a polynomial power series formula, the patented horn design yields smooth reponse, low distortion, and even coverage. This design avoids the problems normally associated with horns that feature sharp flare transitions and flat sidewalls. The Bi-Radial® compound flare configuration of the horn provides constant coverage over defined, solid angles.

Three horn models are available with nominal coverage angles of 90° x 40,° 60° x 40° and 40° x 20° (- 6 dB, Horizontal x Vertical). All three feature 795 mm ($31\frac{5}{16}$ in) square mouth dimensions to further simplify cluster design. In addition, the 90° x 40° and 60° x 40° horns are identical in length.

Each Bi-Radial® constant coverage horn is supplied with a cast aluminum throat that will accept JBL 2446, 2450, or 2485 50 mm (2 in) throat diameter compression drivers. 25 mm (1 in) throat diameter drivers may be mounted if a proper horn throat adapter is installed. Mounting tabs are provided on all four sides of the supplied horn throat and are located just behind the combined horn/driver center of gravity.

To ensure freedom from resonances, light weight, and superior structural strength, the horn bell is constructed of heavy duty, 7.5 mm ($\frac{5}{16}$ in) thick, fiberglass reinforced plastic. Mounting holes are provided on the top wall of the bell to facilitate three-point hanging.

U.S. Patent No 4,308,932. Foreign patents pending

2360A, 2365A, 2366A Bi-Radial® Constant Coverage Horns

Model 2360A

Beamwidth vs Frequency

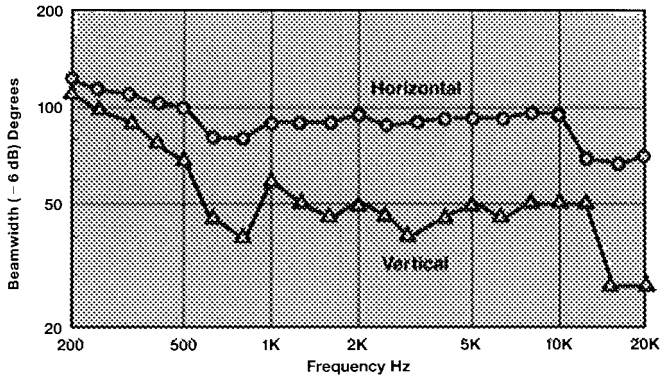

Directivity vs Frequency

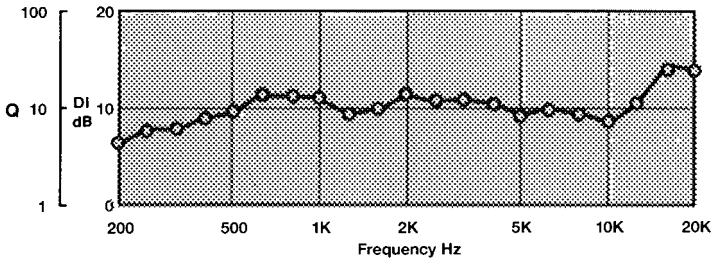

Horizontal Off-axis Response (Normalized to on-axis)

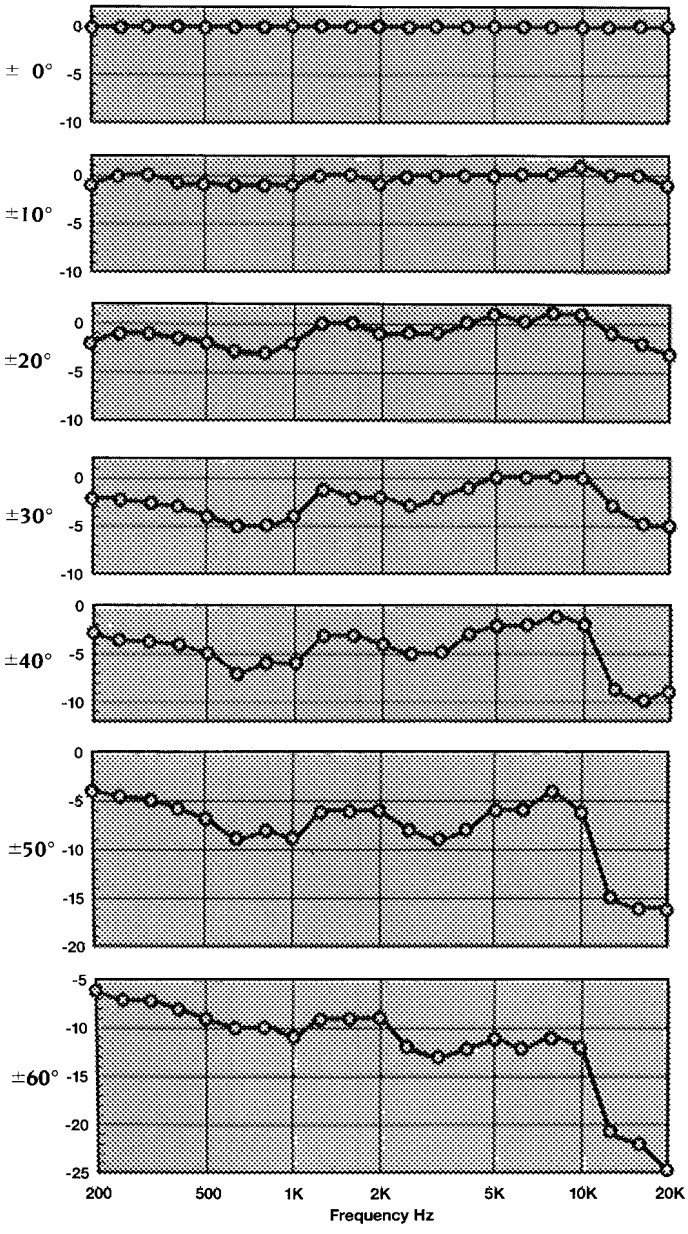

Vertical Off-axis Response

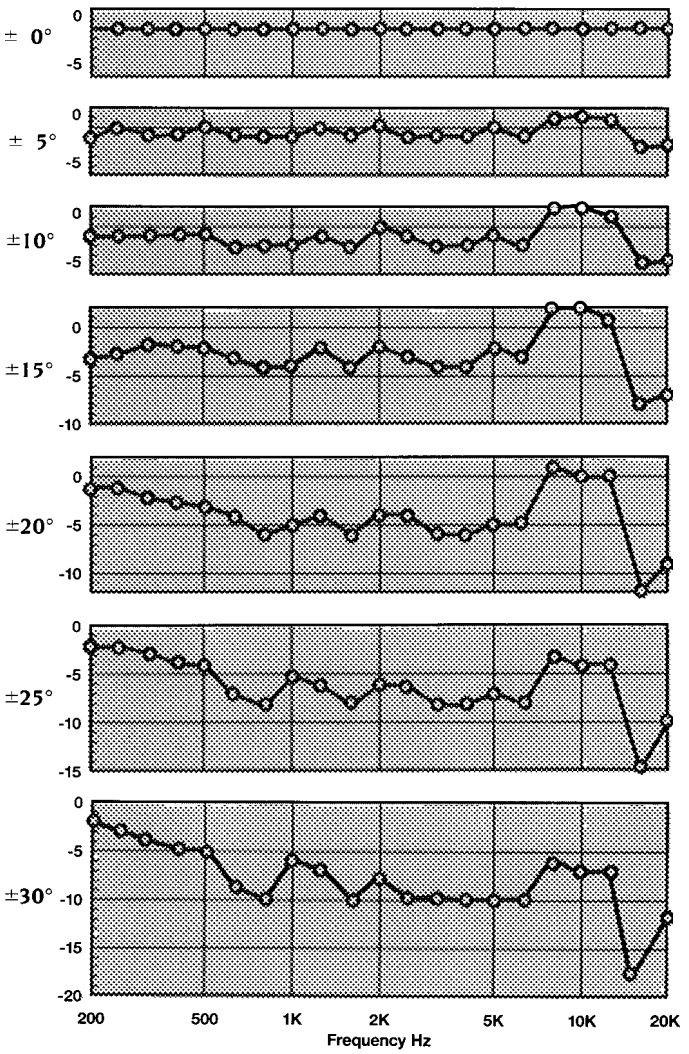

Model 2360A Frontal Isobar Contours

500 Hz Octave Band

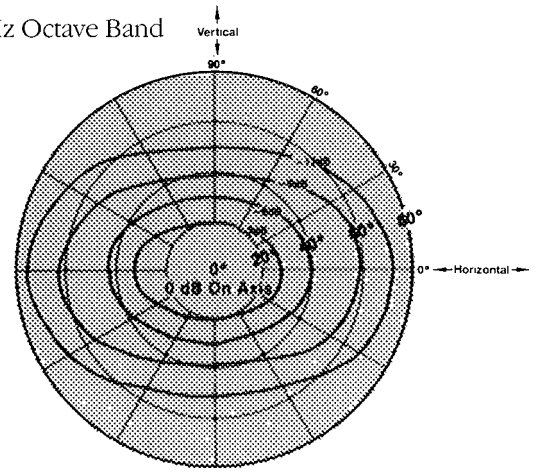

500 Hz octave bandwidth constant sound pressure contours of 0 to -12 dB in steps of -3 dB. The contours are plotted on polar grid lines with on axis being the center of the plot. The data was gathered by taking an octave polar plot at all oblique angles from 0° (horizontal) to 90° (vertical) in steps of 5°

1 kHz Octave Band

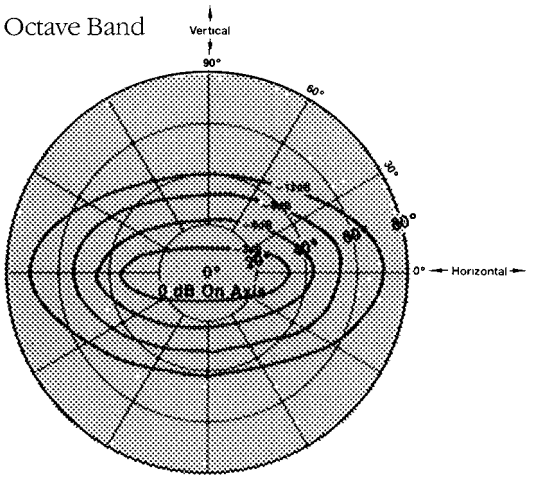

1 kHz octave bandwidth constant sound pressure contours, Same conditions as 500 Hz contours.

2 kHz Octave Band

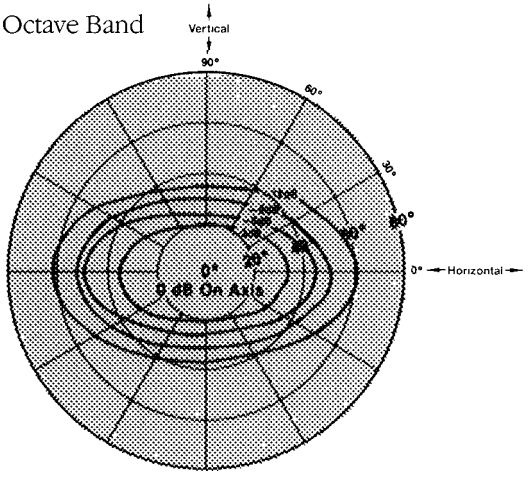

2 kHz octave bandwidth constant sound pressure contours. Same conditions as 500 Hz contours. This data may be considered essentially the same as would be observed at 4 kHz and 8 kHz, considering only the -3, -6, and -9 dB isobars.

Dimensions are in millimeters.
Dimensions in ( ) are in inches

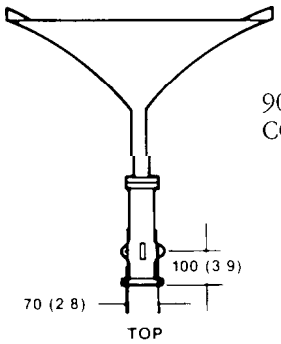

90° x 40° CONSTANT COVERAGE HORN

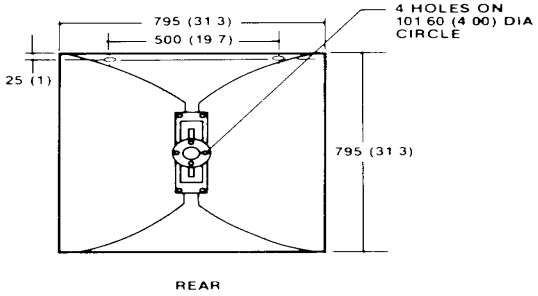

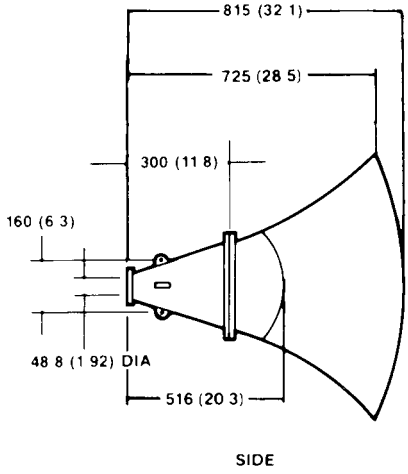

2360A, 2365A, 2366A, Bi-Radial® Constant Coverage Horns

Model 2365A

Beamwidth vs Frequency

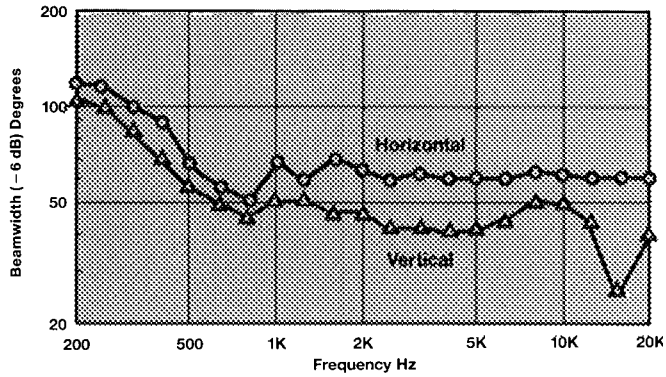

Directivity vs Frequency

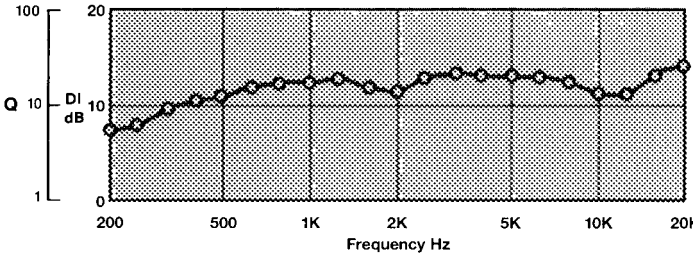

Horizontal Off-axis Response (Normalized to on-axis)

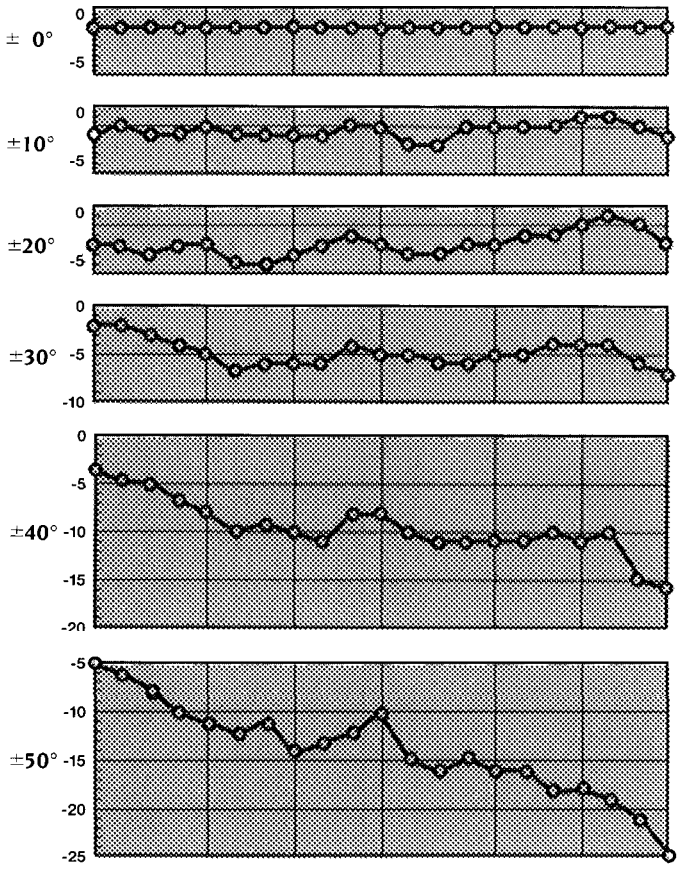

Vertical Off-axis Response (Normalized to on-axis)

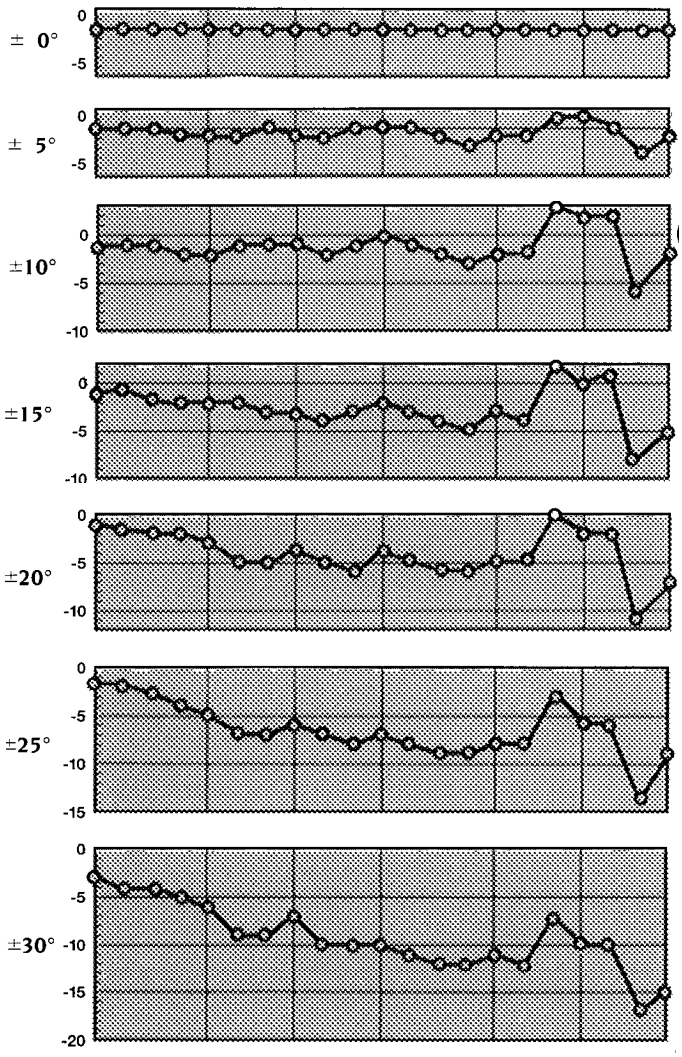

Model 2365A Frontal Isobar Contours

500 Hz Octave Band

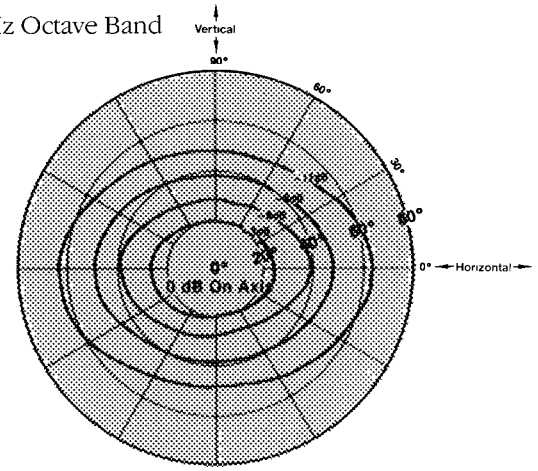

500 Hz octave bandwidth constant sound pressure contours of 0 to - 12 dB in steps of - 3 dB. The contours are plotted on polar grid lines with on axis being the center of the plot. The data was gathered by taking an octave polar plot at all oblique angles from 0° (horizontal) to 90° (vertical) in steps of 5°.

1 kHz Octave Band

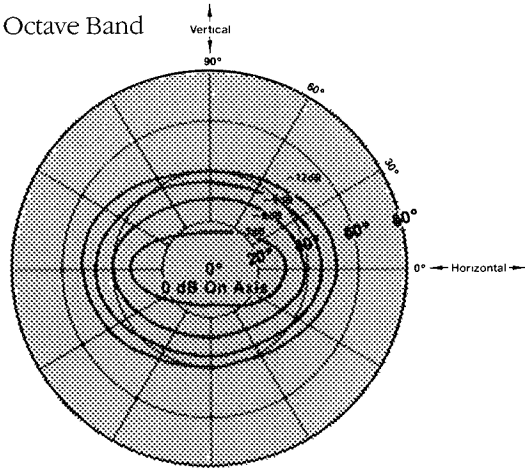

1 kHz octave bandwidth constant sound pressure contours. Same conditions as 500 Hz contours.

2 kHz Octave Band

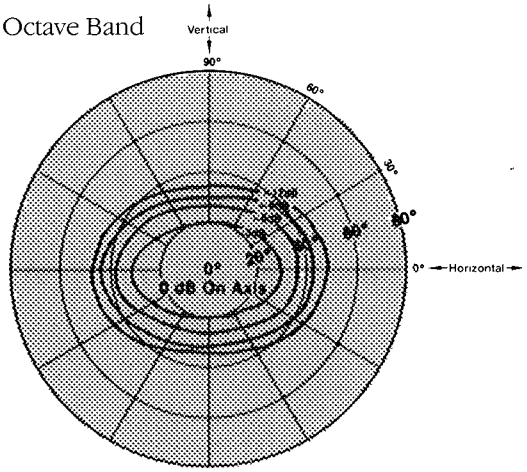

2 kHz octave bandwidth constant sound pressure contours. Same conditions as 500 Hz contours. This data may be considered essentially the same as would be observed at 4 kHz and 8 kHz, considering only the - 3, - 6, and - 9 dB isobars.

Dimensions are in millimeters.
Dimensions in ( ) are in inches.

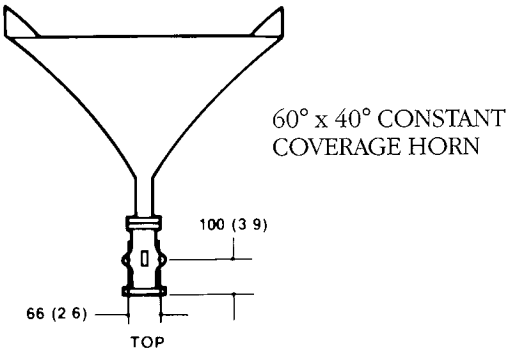

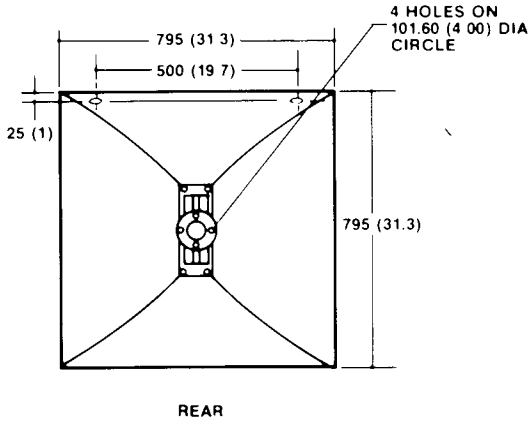

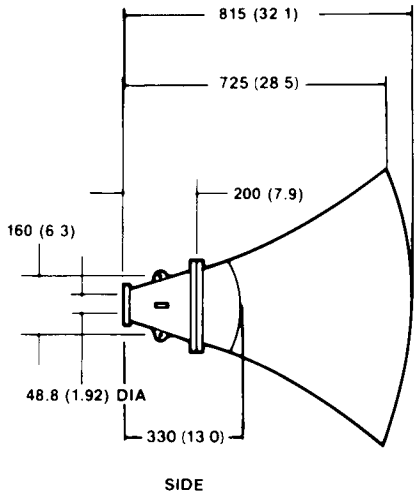

2360A, 2365A, 2366A Bi-Radial® Constant Coverage Horns

Model 2366A

Beamwidth vs Frequency

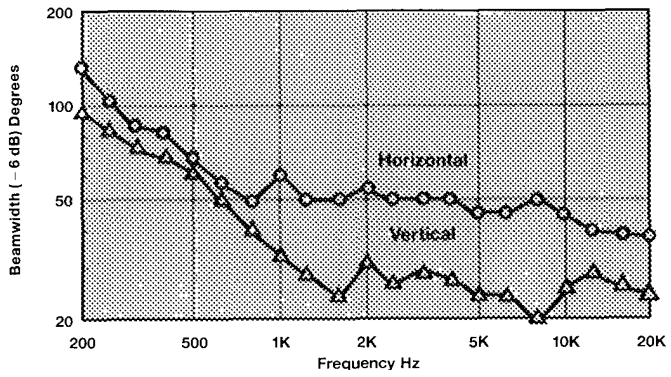

Directivity vs Frequency

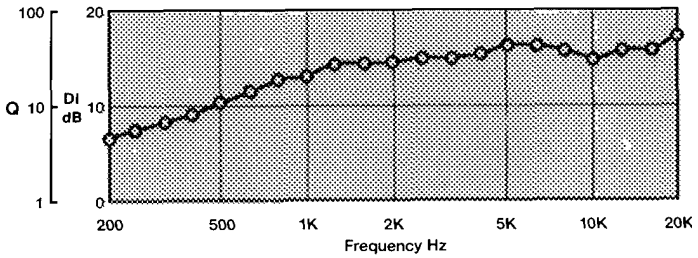

Horizontal Off-axis Response (Normalized to on-axis)

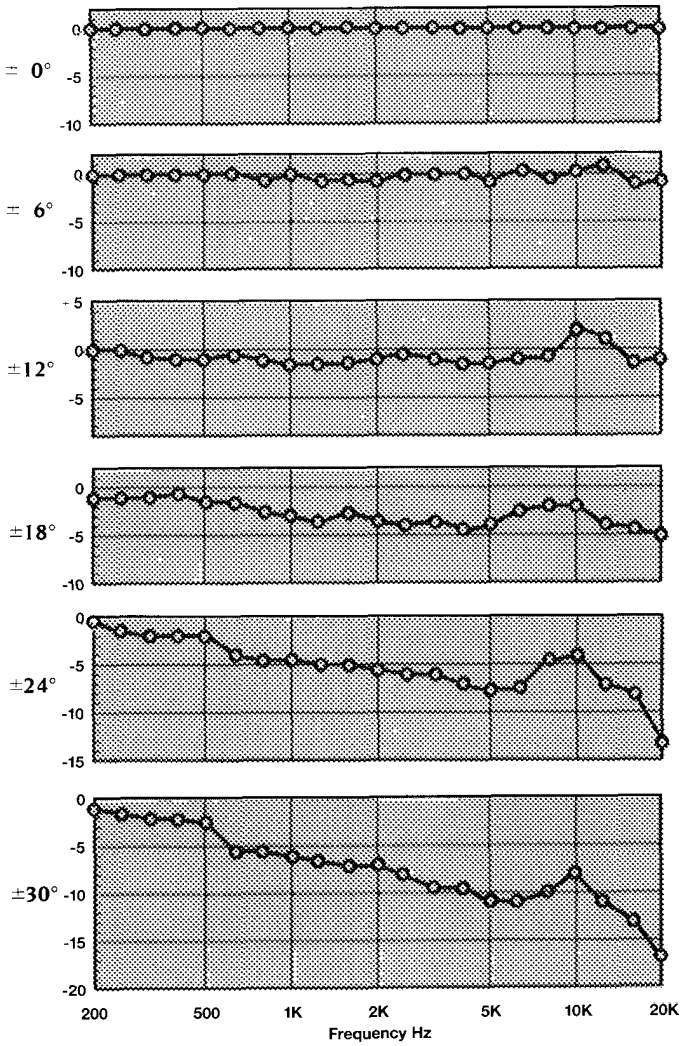

Vertical Off-axis Response (Normalized to on-axis)

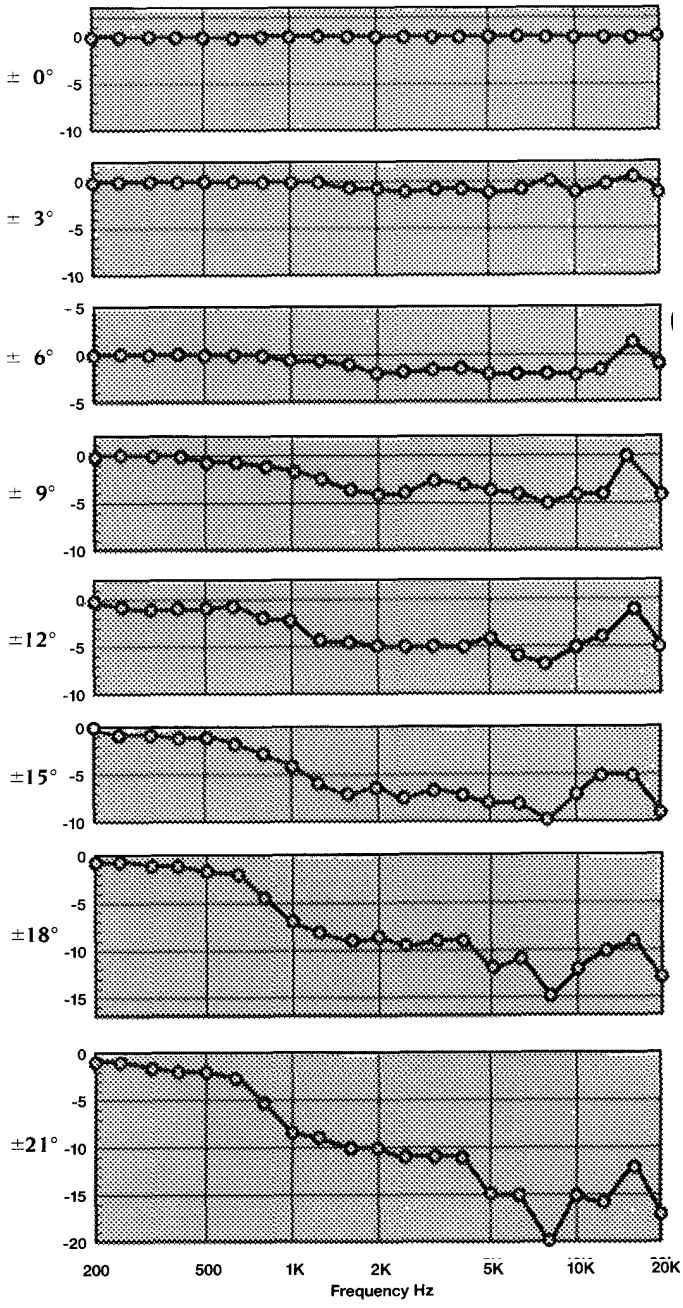

Model 2366A Frontal Isobar Contours

500 Hz Octave Band

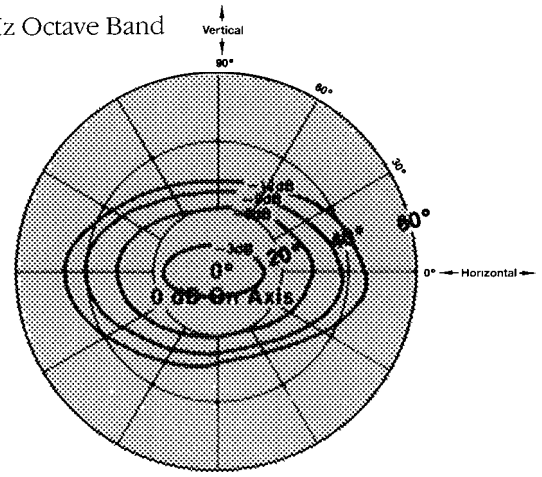

500 Hz octave bandwidth constant sound pressure contours of 0 to -12 dB in steps of -3 dB. The contours are plotted on polar grid lines with on axis being the center of the plot. The data was gathered by taking an octave polar plot at all oblique angles from 0° (horizontal) to 90° (vertical) in steps of 5°.

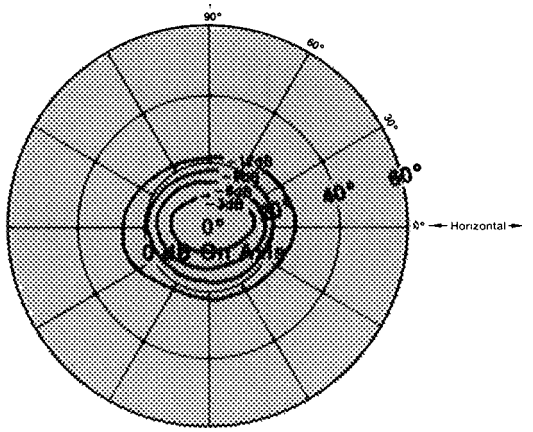

1 kHz octave bandwidth constant sound pressure contours. Same conditions as 500 Hz contours.

2 kHz Octave Band

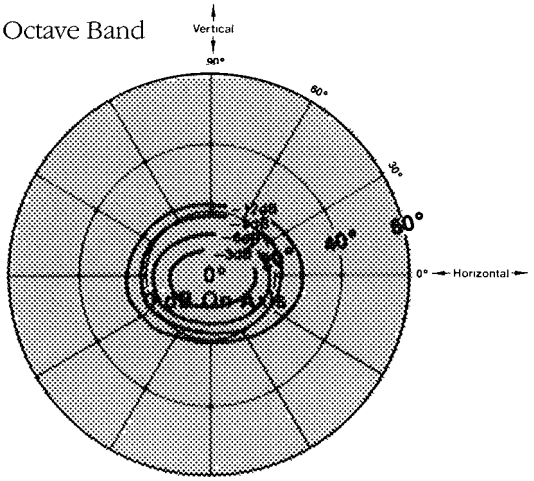

2 kHz octave bandwidth constant sound pressure contours. Same conditions as 500 Hz contours. This data may be considered essentially the same as would be observed at 4 kHz and 8 kHz, considering only the -3, -6, and -9 dB isobars

Dimensions are in millimeters.
Dimensions in ( ) are in inches

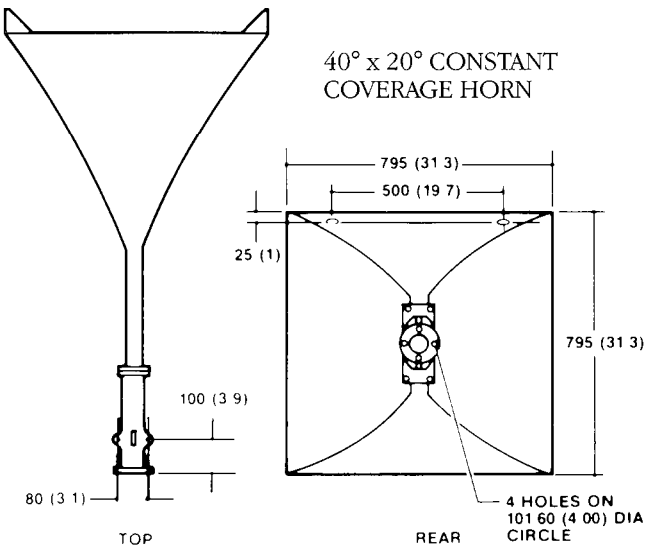

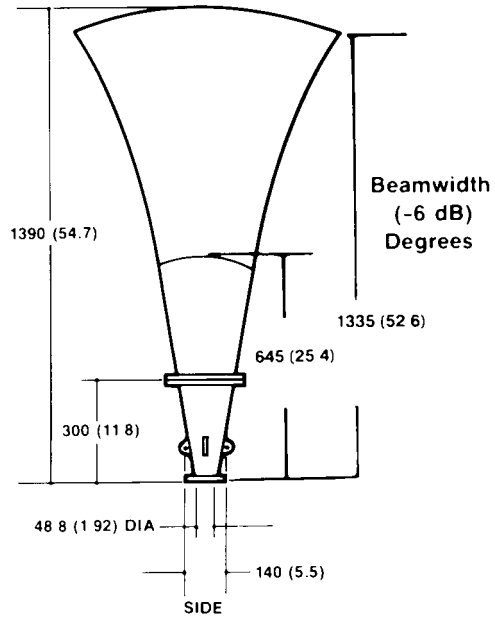

2360A, 2365A, 2366A Bi-Radial® Constant Coverage Horns

Specifications:

HORN MODEL:	2360A	2365A	2366A
Throw:	Short	Medium	Long
Horizontal Coverage Angle Degrees (– 6 dB): Average Range:	 90° (+5°, – 20°) 500 Hz – 16 kHz	 60° (+10°, –10°) 500 Hz – 16 kHz	 50° (+20°, –10°) 500 Hz – 16 kHz
Vertical Coverage Angle Degrees (– 6 dB): Average Range:	 50° (+20°, – 22°) 500 Hz – 16 kHz	 40° (+18°, – 13°) 500 Hz – 16 kHz	 27° (+8°, – 7°) 1000 Hz – 16 kHz
Directivity Factor (Q): Average Range:	14 (+14, -7) 500 Hz – 16 kHz	18 (+7, – 5) 500 Hz – 16 kHz	28 (+12, -8) 1000 Hz – 16 kHz
Directivity Index (DI):	11.5 dB (+3, – 3 dB)	12.5 db (+1.5, -1.5)	14.5 dB (+1.5, –1.5 dB)
Usable Low Frequency Limit:	300 Hz	300 Hz	200 Hz
Minimum Recommended Crossover Frequency (using 2427, 2445, 2450): (using 2485):	 500 Hz 350 Hz	 500 Hz 350 Hz	 500 Hz 300 Hz
Axial Pressure Sensitivity: Measured on axis in the far field with 1 watt input (2.83 V rms, 8 ohms; 4.0 V rms, 16 ohms) and referred to a 1 meter distance calculated by inverse square law. Listed sound pressure level (SPL re 20 mPa) represents an average from 630 Hz to 4 kHz using the JBL 2446, 2450, or 2485 driver.			
1 Watt/ 1 Meter Axial Sensitivity:	113 dB SPL	115 dB SPL	118 dB SPL
Construction: Horn Bell: Horn Throat:	 Molded reinforced urethane resin. Aluminum, sand cast (nominal 7.5 mm [5/16 in] wall thickness).		
Overall Dimensions: (with throat attached) Mouth Height: Mouth Width: Length:	 795 mm (31 5/16 in) 795 mm (31 5/16 in) 815 mm (32 7/64 in)	 795 mm (31 5/16 in) 795 mm (31 5/16 in) 815 mm (32 7/64 in)	 795 mm (31 5/16 in) 795 mm (31 5/16 in) 1390 mm (54 45/64 in)
Net Weight: Shipping Weight[1]	12.2 kg (27 lb) 30.2 kg (66.5 lb)	11.3 kg (25 lb) 26.2 kg (57.8 lb)	16.3 kg (36 lb) 30.8 kg (68 lb)

[1] Horn and horn throat are packed in one carton

JBL Professional
8500 Balboa Boulevard, P.O. Box 2200
Northridge, California 91329 U.S.A.
A Harman International Company

SS 2360/65/66
CRP 5M
10/96