Operating Manual

Stereo Spatial Enhancer

MODEL 222A

orban

IMPORTANT NOTE: Refer to the unit's rear panel for your Model #.

Model Number:	**Description:**
222A/U	Enhancer, 120V
222A/E	Enhancer, 230V

MANUAL:

Part Number:	Description:
95070-000-05	222A Manual



CAUTION: TO REDUCE THE RISK OF ELECTRICAL SHOCK, DO NOT REMOVE COVER (OR BACK).
NO USER SERVICEABLE PARTS INSIDE. REFER SERVICING TO QUALIFIED SERVICE PERSONNEL.

WARNING: TO REDUCE THE RISK OF FIRE OR ELECTRICAL SHOCK,
DO NOT EXPOSE THIS APPLIANCE TO RAIN OR MOISTURE.



This symbol, wherever it appears, alerts you to the presence of uninsulated dangerous voltage inside the enclosure — voltage that may be sufficient to constitute a risk of shock.



This symbol, wherever it appears, alerts you to important operating and maintenance instructions in the accompanying literature. Read the manual.

IMPORTANT SAFETY INSTRUCTIONS

All the safety and operating instructions should be read before the appliance is operated.

Retain Instructions: The safety and operation instructions should be retained for future reference.

Heed Warnings: All warnings on the appliance and in the operating instructions should be adhered to.

Follow Instructions: All operation and user instructions should be followed.

Water and Moisture: The appliance should not be used near water (e.g., near a bathtub, washbowl, kitchen sink, laundry tub, in a wet basement, or near a swimming pool, etc.).

Ventilation: The appliance should be situated so that its location or position does not interfere with its proper ventilation. For example, the appliance should not be situated on a bed, sofa, rug, or similar surface that may block the ventilation openings; or, placed in a built-in installation, such as a bookcase or cabinet that may impede the flow of air through the ventilation openings.

Heat: The appliance should be situated away from heat sources such as radiators, heat registers, stoves, or other appliances (including amplifiers) that produce heat.

Power Sources: The appliance should be connected to a power supply only of the type described in the operating instructions or as marked on the appliance.

Grounding or Polarization: Precautions should be taken so that the grounding or polarization means of an appliance is not defeated.

Power-Cord Protection: Power-supply cords should be routed so that they are not likely to be walked on or pinched by items placed upon or against them, paying particular attention to cords at plugs, convenience receptacles, and the point where they exit from the appliance.

Cleaning: The appliance should be cleaned only as recommended by the manufacturer.

Non-use Periods: The power cord of the appliance should be unplugged from the outlet when left unused for a long period of time.

Object and Liquid Entry: Care should be taken so that objects do not fall and liquids are not spilled into the enclosure through openings.

Damage Requiring Service: The appliance should be serviced by qualified service personnel when:
The power supply cord or the plug has been damaged; or
Objects have fallen, or liquid has been spilled into the appliance; or
The appliance has been exposed to rain; or
The appliance does not appear to operate normally or exhibits a marked change in performance; or
The appliance has been dropped, or the enclosure damaged.

Servicing: The user should not attempt to service the appliance beyond that described in the operating instructions. All other servicing should be referred to qualified service personnel.

The Appliance should be used only with a cart or stand that is recommended by the manufacturer.

Safety Instructions (European)

Notice For U.K. Customers If Your Unit Is Equipped With A Power Cord.

WARNING: THIS APPLIANCE MUST BE EARTHED.

The cores in the mains lead are coloured in accordance with the following code:

GREEN and YELLOW - Earth BLUE - Neutral BROWN - Live

As colours of the cores in the mains lead of this appliance may not correspond with the coloured markings identifying the terminals in your plug, proceed as follows:
The core which is coloured green and yellow must be connected to the terminal in the plug marked with the letter E, or with the earth symbol, (⏚), or coloured green, or green and yellow.
The core which is coloured blue must be connected to the terminal marked N or coloured black.
The core which is coloured brown must be connected to the terminal marked L or coloured red.



The power cord is terminated in a CEE7/7 plug (Continental Europe). The green/yellow wire is connected directly to the unit's chassis. If you need to change the plug and if you are qualified to do so, refer to the table below.

WARNING: If the ground is defeated, certain fault conditions in the unit or in the system to which it is connected can result in full line voltage between chassis and earth ground. Severe injury or death can then result if the chassis and earth ground are touched simultaneously.

CONDUCTOR		WIRE COLOR	
		Normal	Alt
L	LIVE	BROWN	BLACK
N	NEUTRAL	BLUE	WHITE
E	EARTH GND	GREEN-YELLOW	GREEN

AC Power Cord Color Coding

Safety Instructions (German)

Gerät nur an der am Leistungsschild vermerkten Spannung und Stromart betreiben.

Sicherungen nur durch solche, gleicher Stromstärke und gleichen Abschaltverhaltens ersetzen. Sicherungen nie überbrücken.

Jedwede Beschädigung des Netzkabels vermeiden. Netzkabel nicht knicken oder quetschen. Beim Abziehen des Netzkabels den Stecker und nicht das Kabel enfassen. Beschädigte Netzkabel sofort auswechseln.

Gerät und Netzkabel keinen übertriebenen mechanischen Beaspruchungen aussetzen.

Um Berührung gefährlicher elektrischer Spannungen zu vermeiden, darf das Gerät nicht geöffnet werden. Im Fall von Betriebsstörungen darf das Gerät nur Von befugten Servicestellen instandgesetzt werden. Im Gerät befinden sich keine, durch den Benutzer reparierbare Teile.

Zur Vermeidung von elektrischen Schlägen und Feuer ist das Gerät vor Nässe zu schützen. Eindringen von Feuchtigkeit und Flüssigkeiten in das Gerät vermeiden.

Bei Betriebsstörungen bzw. nach Eindringen von Flüssigkeiten oder anderen Gegenständen, das Gerät sofort vom Netz trennen und eine qualifizierte Servicestelle kontaktieren.

Safety Instructions (French)

On s'assurera toujours que la tension et la nature du courant utilisé correspondent bien à ceux indiqués sur la plaque de l'appareil.

N'utiliser que des fusibles de même intensité et du même principe de mise hors circuit que les fusibles d'origine. Ne jamais shunter les fusibles.

Eviter tout ce qui risque d'endommager le câble seceur. On ne devra ni le plier, ni l'aplatir. Lorsqu'on débranche l'appareil, tirer la fiche et non le câble. Si un câble est endommagé, le remplacer immédiatement.

Ne jamais exposer l'appareil ou le câble ä une contrainte mécanique excessive.

Pour éviter tout contact averc une tension électrique dangereuse, on n'oouvrira jamais l'appareil. En cas de dysfonctionnement, l'appareil ne peut être réparé que dans un atelier autorisé. Aucun élément de cet appareil ne peut être réparé par l'utilisateur.

Pour éviter les risques de décharge électrique et d'incendie, protéger l'appareil de l'humidité. Eviter toute pénétration d'humidité ou fr liquide dans l'appareil.

En cas de dysfonctionnement ou si un liquide ou tout autre objet a pénétré dans l'appareil couper aussitôt l'appareil de son alimentation et s'adresser à un point de service aprésvente autorisé.

Safety Instructions (Spanish)

Hacer funcionar el aparato sòlo con la tensiòn y clase de corriente señaladas en la placa indicadora de caracteristicas.

Reemplazar los fusibles sòlo por otros de la misma intensidad de corriente y sistema de desconexiòn. No poner nunca los fusibles en puente.

Proteger el cable de alimentaciòn contra toda clase de daños. No doblar o apretar el cable. Al desenchufar, asir el enchufe y no el cable. Sustituir inmediatamente cables dañados.

No sometar el aparato y el cable de alimentaciòn a esfuerzo mecànico excesivo.

Para evitar el contacto con tensiones eléctricas peligrosas, el aparato no debe abrirse. En caso de producirse fallos de funcionamiento, debe ser reparado sòlo por talleres de servicio autorizados. En el aparato no se encuentra ninguna pieza que pudiera ser reparada por el usuario.

Para evitar descargas eléctricas e incendios, el aparato debe protégerse contra la humedad, impidiendo que penetren ésta o lìquidos en el mismo.

En caso de producirse fallos de funcionamiento como consecuencia de la penetraciòn de lìquidos u otros objetos en el aparato, hay que desconectarlo inmediatamente de la red y ponerse en contacto con un taller de servicio autorizado.

Safety Instructions (Italian)

Far funzionare l'apparecchio solo con la tensione e il tipo di corrente indicati sulla targa riportante i dati sulle prestazioni.

Sostituire i dispositivi di protezione (valvole, fusibili ecc.) solo con dispositivi aventi lo stesso amperaggio e lo stesso comportamento di interruzione. Non cavallottare mai i dispositivi di protezione.

Evitare qualsiasi danno al cavo di collegamento alla rete. Non piegare o schiacciare il cavo. Per staccare il cavo, tirare la presa e mai il cavo. Sostituire subito i cavi danneggiati.

Non esporre l'apparecchio e il cavo ad esagerate sollecitazioni meccaniche.

Per evitare il contatto con le tensioni elettriche pericolose, l'apparecchio non deve venir aperto. In caso di anomalie di funzionamento l'apparecchio deve venir riparato solo da centri di servizio autorizzati. Nell'apparecchio non si trovano parti che possano essere riparate dall'utente.

Per evitare scosse elettriche o incendi, l'apparecchio va protetto dall'umidità. Evitare che umidità o liquidi entrino nell'apparecchio.

In caso di anomalie di funzionamento rispettivamente dopo la penetrazione di liquidi o oggetti nell'apparecchio, staccare immediatamente l'apparecchio dalla rete e contattare un centro di servizio qualificato.

Operating Manual

Stereo Spatial Enhancer

MODEL 222A

orban

The 222A Stereo Spatial Enhancer is protected by U.S. patent #4,450,871
Orban is a registered trademark.
All trademarks are property of their respective companies.

This manual is part number 95070.000.05

© Copyright 2000, 2001 Orban

1525 ALVARADO STREET, SAN LEANDRO, CA 94577 USA
Phone: (1) 510/351-3500; Fax: (1) 510/351-0500; E-Mail: custserv@orban.com; Site: www.orban.com
P/N: 95070-000-05

Operating Manual

Stereo Spatial Enhancer

Model 222A

page	contents
1-1	**Section 1: Introduction** Orban's Stereo Spatial Enhancer Registration, Warranty, Feedback
2-1	**Section 2: Installation** Installation and Set-up
3-1	**Section 3: Operation** Controls and Displays More About Stereo Spatial Enhancement
4-1	**Section 4: Maintenance** Routine Maintenance Getting Inside the Chassis Performance Evaluation, Alignment
5-1	**Section 5: Troubleshooting** Problems and Possible Causes Technical Support, Factory Service
6-1	**Section 6: Technical Data** Specifications Circuit Description Parts List, Schematics, Assembly Drawings Abbreviations

INDEX on next page

Index

abbreviations 6-25
accessories 6-2
alignment 4-3
assembly drawings 6-17
attack transients 3-3, 6-3
audio
  connections 2-4
  input 2-4, 2-7
  output 2-5, 2-6
audio processor problems 5-2

balanced inputs 2-4, 2-6
balanced output transformers 2-6, 6-2
block diagram 6-18
buzzes 5-2

cable 2-4
  shielding 2-4, 2-6,7
chassis ground 2-6
chassis, getting inside 4-2
circuit boards, access to 4-2
circuit description 6-3
circuit ground 2-6
cleaning 4-2
clicks 5-2
clipping 5-3
common mode rejection 2-4, 6-2
component vendors 6-16
connectors 2-4, 6-2
consumer equipment 2-2
control module 6-6
controls 3-2
covers, removing & replacing 4-2
customer service 5-3,4

differential input amplifiers 2-4, 6-4
dimensions 6-2
displays 3-2, 6-8
distortion 5-3, 6-2

enhancement
  control circuitry 6-6
  display 3-2, 6-8
  excessive 3-3
  insufficient 5-3

factory service 5-4
frequency response 6-2
front panel 1-2, 3-2
fuse 2-2, 6-2
gating 6-7
grounding 2-2,3, 2-5,6,7, 5-2
  difficult situations 2-7
  ground loop 2-6,7

hum 5-2

IM 6-2
impedance 2-4,5, 6-2
input 2-4, 2-7, 6-2
  amplifiers 2-4, 6-4
  balanced 2-7
  impedance 6-2
  level 2-4, 6-2
  level modification 2-4
  overload point 2-4
  unbalanced 2-6
installation 2-1

load impedance 6-2
L−R (difference) 3-3, 6-4, 6-6
L+R (sum) 3-3, 6-6

maintenance, routine 4-2
multipath distortion 3-3, 5-3

noise 6-2

opamps 5-2
operating level, nominal 2-4
OPTIMOD 5-2
options 6-2
ordering parts 6-11
output 2-5, 2-6
  balanced 2-6
  level 2-5, 6-2
  line drivers 6-5
  modules 5-2, 6-5
  problems 5-2
  stage 6-5
overload point 2-4, 6-2

packing for shipment 5-4
parts list 6-10
performance evaluation 4-3
power
  cord 2-2,3
  indicator 6-8
  requirements 6-2
  supply 6-9
  supply problems 5-2
  voltage 2-2
problems 5-2
product features 1-3
program material 5-2,3
psychoacoustic factors 3-3
pumping 5-2

rear panel 1-2
registration card 1-4
regulated voltage 6-9
regulator dropout 6-9
retrofit kits 2-4, 2-6, 6-2
return authorization 5-4
RF suppression 5-2

schematics 6-17
security cover 6-2
semi-professional equipment 2-4
service 5-4,5
shielding 2-4, 2-6,7
shipping damage 2-2
shipping instructions 5-4
source impedance 6-2
source material 5-2,3
specifications 6-2

technical support 5-3
temperature, ambient 2-2
test points 4-3, 6-19
THD 6-2
troubleshooting 5-1

unbalanced input 2-7
unbalanced load 2-5
user feedback 1-4

VCA 6-4
voltage regulators 5-2

warranty 1-4, 6-2
width limit 3-2,3, 5-3

XLR connectors 2-4

Section 1 Introduction

page contents

1-3 The Orban Stereo Spatial Enhancer

1-2 Fig. 1-1: Front and Rear Panels

1-4 Registration, Warranty, Feedback

222A Stereo Spatial Enhancer

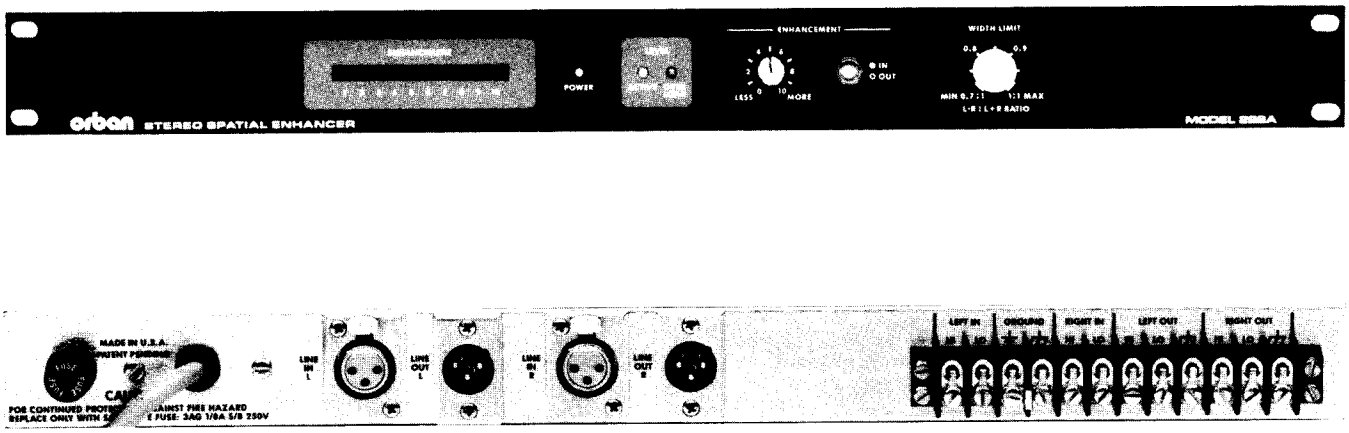

Fig. 1-1: Front and Rear Panels
(The WIDTH LIMIT control is an internal trimmer in some units.)

The Orban Stereo Spatial Enhancer

The Orban 222A Stereo Spatial Enhancer augments the *spatial image* of a stereo broadcasting station. The 222A uses a proprietary technique to magnify and intensify the stereo image — listeners will hear more loudness, brightness, dynamics, and depth.

The 222A Stereo Spatial Enhancer:

- Detects and enhances the psychoacoustic directional cues present in all stereo program material.
- Increases brightness, impact, and definition of music.
- Is specifically designed to avoid any distortion caused by increases in L–R subchannel level in multipath situations.
- Does not increase multipath distortion, unnaturally exaggerate reverberation, or increase sensitivity to vertical tracing distortion in disk playback (when operated with recommended control settings).
- Is fully compatible with mono receivers.
- Complements any broadcast audio processor.
- Has intelligent gating to make it immune to small errors in channel balance, prevents over-enhancement, and avoids the mushy, homogenized sound that typically occurred when stereo enhancement was attempted with earlier techniques.

The Orban Stereo Spatial Enhancer

The Orban 222A Stereo Spatial Enhancer augments the *spatial image* of a stereo broadcasting station. The 222A uses a proprietary technique to magnify and intensify the stereo image — listeners will hear more loudness, brightness, dynamics, and depth.

The 222A Stereo Spatial Enhancer:

- Detects and enhances the psychoacoustic directional cues present in all stereo program material.
- Increases brightness, impact, and definition of music.
- Is specifically designed to avoid any distortion caused by increases in L–R subchannel level in multipath situations.
- Does not increase multipath distortion, unnaturally exaggerate reverberation, or increase sensitivity to vertical tracing distortion in disk playback (when operated with recommended control settings).
- Is fully compatible with mono receivers.
- Complements any broadcast audio processor.
- Has intelligent gating to make it immune to small errors in channel balance, prevents over-enhancement, and avoids the mushy, homogenized sound that typically occurred when stereo enhancement was attempted with earlier techniques.

The Orban Stereo Spatial Enhancer

The Orban 222A Stereo Spatial Enhancer augments the *spatial image* of a stereo broadcasting station. The 222A uses a proprietary technique to magnify and intensify the stereo image — listeners will hear more loudness, brightness, dynamics, and depth.

The 222A Stereo Spatial Enhancer:

- Detects and enhances the psychoacoustic directional cues present in all stereo program material.
- Increases brightness, impact, and definition of music.
- Is specifically designed to avoid any distortion caused by increases in L–R subchannel level in multipath situations.
- Does not increase multipath distortion, unnaturally exaggerate reverberation, or increase sensitivity to vertical tracing distortion in disk playback (when operated with recommended control settings).
- Is fully compatible with mono receivers.
- Complements any broadcast audio processor.
- Has intelligent gating to make it immune to small errors in channel balance, prevents over-enhancement, and avoids the mushy, homogenized sound that typically occurred when stereo enhancement was attempted with earlier techniques.

Registration, Warranty, Feedback

Registration Card

There are two good reasons for returning the Registration Card shipped with this product:

1) It enables us to inform you of new applications, performance improvements, and service aids which may be developed, and

2) It helps us respond promptly to claims under warranty without having to request a copy of your bill of sale or other proof of purchase.

Please fill in the Registration Card and send it to us today. If it is lost (or you have purchased this unit used), please photocopy the duplicate below, fill it in, and send it to Orban at the address on the inside of the front cover.

Registration Card

Model # _____ Serial # _____ Purchase Date _____

Your name _____ Title _____

Company _____ Telephone _____

Street _____

City, State, Mail Code (Zip), Country _____

Nature of your product application _____

How did you hear about this product? _____ Purchased from _____

Comments _____

_____

Which magazines do you find the most useful to your job?

___ Audio	___ Broadcast Engineering	___ Broadcast	___ dB Magazine
___ Electronic Musician	___ EQ	___ Millimeter	___ Mix
___ Post	___ Pro Sound News	___ Radio & Records	___ Radio World
___ RE/P	___ Sound & Communications	___ S & VC	___ TV Broadcast
___ TV Tech	___ _____	___ _____	
	___ _____	___ _____	

95101-000-07 5/90

Warranty

The warranty, which can be enjoyed only by the first end-user of record, is stated on the separate Warranty Certificate packed with this manual. Save it for future reference. Details on obtaining factory service are provided on 5-4.

User Feedback Form

We are very interested in your comments about this product. Your suggestions for improvements to either the product or the manual will be carefully reviewed. A postpaid User Feedback Form is provided in the back of this manual for your convenience. If it is missing, please write us at the address on the inside of the front cover. Thank you.

Section 2 Installation

page contents

2-2 Installation
2-3 Fig. 2-1: AC Power Cord Color Code
2-4 Audio Wiring, Connectors, Levels
2-6 Grounding: Power, Audio, Difficult Situations
2-5 Fig. 2-2: Some Possible Grounding Schemes

CAUTION

The installation and servicing instructions in this manual are for use by qualified personnel only. To avoid electric shock, do not perform any servicing other than that contained in the Operating Instructions unless you are qualified to do so. Refer all servicing to qualified service personnel.



Installation

Allow about 15 minutes for installation.

Installation consists of unpacking and inspecting the 222A, mounting it in a rack, and connecting audio and power.

1) Unpack and inspect.

If obvious physical damage is noted, contact the carrier immediately to make a damage claim.

If you should ever have to ship the 222A (e.g., for servicing), it is best to ship it in the original packing materials since these have been carefully designed to protect the unit. Therefore, make a mental note of how the unit is packed and *save all packing materials.*

Packed with the 222A are:

1	Knob wrench
1	Warranty Certificate
1	Registration Card
1	Operating Manual

2) Mount the 222A in a rack.

The 222A requires one standard rack unit (1¾ inches, 4.4 cm).

There should be a good ground connection between the rack and the 222A chassis — check this with an ohmmeter.



Mounting the unit directly over large heat-producing devices (such as a vacuum-tube power amplifier) may shorten component life and is not recommended. Ambient temperature should not exceed 113°F (45°C) when equipment is powered.

3) Connect audio input and output.

The 222A is designed to be inserted in the program line at the studio *prior* to other audio processing. See the hook-up and grounding information on the following pages.

4) Connect power.

A☐ Check the line voltage.



The 222A is shipped for 115 or 230V, 50/60Hz operation. Refer to the unit's rear panel for your Model # and the inside front cover of this manual for your Model #'s line voltage setting. To change the operating voltage, restrap power transformer T1 (see the instructions on the transformer). Do not attempt this unless you are qualified to do so.

B❑ Check the value of the fuse and change the fuse if the value is incorrect.

For safety, the fuse must be 1/8-amp 250V Slo-Blo fuse — 3AG or 125mA "T" type as appropriate (for 115-volt *or* 230-volt operation).

c❑ Connect the 222A's power cord to an appropriate AC power source.

The power cord is terminated in a "U-ground" plug (USA standard), or CEE7/7 plug (Continental Europe), as appropriate to your 222A's Model #. The green/yellow wire is connected directly to the 222A chassis.

If it becomes necessary to lift this ground to suppress ground loops, do so with a three-prong to two-prong adapter plug, rather than by damaging the power plug. But you should *not* defeat the ground unless absolutely necessary, because it eliminates the intrinsic safety feature of the three-wire system.

WARNING

If the ground is defeated, certain fault conditions in the unit or in the system to which it is connected can result in full line voltage between chassis and earth ground. Severe injury or death can then result if the chassis and earth ground are touched simultaneously.

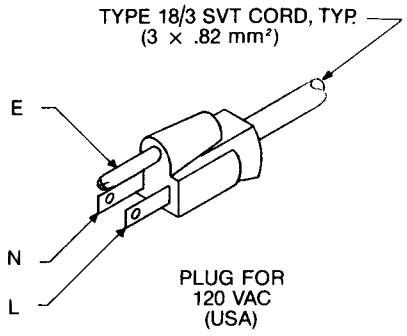

CONDUCTOR		WIRE COLOR	
		Normal	Alt
L	LINE	BROWN	BLACK
N	NEUTRAL	BLUE	WHITE
E	EARTH GND	GREEN-YELLOW	GREEN

Fig. 2-1: AC Power Cord Color Coding

5) Complete the Registration Card and return it to Orban (please).

The Registration Card enables us to inform you of new applications, performance improvements, and service aids which may be developed, and it helps us respond promptly to claims under warranty without having to request a copy of your bill of sale or other proof of purchase. Please fill in the Registration Card and send it to us today.

Audio Input and Output Connections

Cable:

We recommend using **two-conductor shielded cable** (such as Belden 8451 or equivalent), because signal current flows through the two conductors only. The shield does not carry signal, is used *only* for shielding, and is ordinarily connected to ground at one end only.

> Because use of single-conductor cables virtually eliminates any possibility of carefully controlling the system grounding scheme, it is NOT RECOMMENDED! Even so, it often does work adequately.
>
> Sometimes, particularly if you are using the 222A with musical instruments or home-type equipment, single-conductor shielded cable may be the only practical alternative. In this case, connect the inner conductors of the shielded cables to the HI sides of the 222A inputs and outputs. Connect the shield of the 222A *input* cable to the LO input, and connect the shield of the 222A *output* cable to the 222A's LO output terminal on the rear-panel barrier strip. Connect both IN LO and OUT LO terminals to (⏚).

Connectors:

- **Input and output connectors** are barrier strip terminals (with #5 screws) and XLR-type connectors.

Levels and impedances:

- Nominal **input level** is between −10 and +8dBu. The absolute overload point is +20dBu. (0dBu = 0.775V RMS; for this application, the dBm @ 600Ω scale on voltmeters can be read as if it were calibrated in dBu.)
- Some "**semi-professional" and** almost all **consumer equipment** uses a nominal operating level of −10dBu. While the 222A will work at this level, its operating range will be reduced. To achieve optimum operation at −10dBu, modify the 222A's differential input amplifiers to provide 14dB gain boost by replacing resistors R1b, R2b, R3b, and R4b with 100.0K ±¼%* metal film resistors. Do not attempt this modification if not qualified. Note that after this modification, the nominal level at the 222A's output will be +4dB. If the equipment driven by the 222A must receive −10dBu levels, attenuators will have to be placed after the 222A.

  * ±1% resistors can be used with some compromise in common-mode (hum) rejection — this is not likely to be significant in most installations.

- The **electronically-balanced input** of each channel is compatible with most professional and semi-professional sound equipment, balanced or unbalanced, having a source impedance of 600 ohms or less. If the source impedance is greater (as in some vacuum-tube audiophile preamps), remove capacitors C1 (left channel) and C3 (right channel), and connect the hot side of the driving equipment's outputs to the 222A's HI inputs.

Audio Input and Output Connections (continued)

Levels (continued):

- The **electronically-balanced and floating output** of each channel simulates a true transformer output. The *source* impedance is 30 ohms. In addition, there is a 1000pF capacitor between each output (HI and LO) to the chassis for RFI suppression. The output is capable of driving loads of 600 ohms or higher. Maximum output level is >+20dBm into 600 ohms. The 222A provides nominal unity gain — enhancement will only slightly increase peak levels.
- If an **unbalanced output** is required (to drive unbalanced inputs of other equipment), it should be taken between the HI and LO outputs. No special precautions are required even though one side of the output is grounded. Connect the LO output terminal to (⏚).

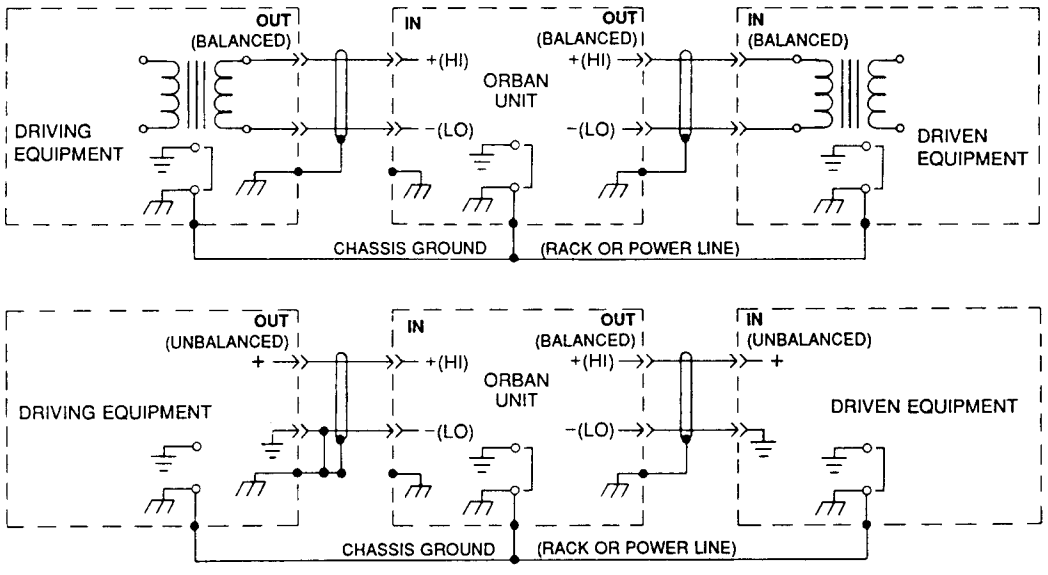

Fig. 2-2: Some Possible Grounding Schemes
(See following pages for discussion.)

Grounding

Very often, grounding is approached in a "hit or miss" manner. But with care it is possible to wire an audio studio so that it is free from ground loops (which induce hum and can cause oscillation) and provides maximum protection from power faults. In an ideal system:

- All units in the system should have *balanced inputs*. In a modern system with low output impedances and high input impedances, a balanced input will provide common-mode rejection and prevent ground loops—regardless of whether it is driven from a balanced or unbalanced source. (The 222A has balanced inputs.)
- All equipment *circuit grounds* should be connected to each other; all equipment *chassis grounds* must be connected together.
- *Cable shields* should be connected at one end only—preferably the source (output) end.

Power Ground:

- Ground the 222A chassis through the third wire in the power cord. Proper grounding techniques require the equipment chassis to be connected to power/earth ground at all times. *A proper power ground is essential to safe operation*. Lifting a chassis from power ground creates a potential safety hazard.

Circuit Ground:

To maintain the same potential in all equipment, the circuit (audio) grounds must be connected to one another:

- *In a simple one-studio system*, the connection through power ground (via the third wire of the power cord) will suffice. Connect the 222A's circuit ground ( ) terminal to its chassis ground ( ) terminal. Also connect the circuit and chassis grounds of other equipment.
- *In larger systems*, it is common to establish an isolated circuit ground system that is insulated from the power ground except at one point (usually the studio power distribution panel). In this case, disconnect the 222A's circuit ground ( ) terminal from its chassis ground ( ) terminal, then connect the 222A's circuit ground ( ) terminal to the isolated circuit ground system.

Audio Output:

To maintain the same potential in all equipment, the circuit (audio) grounds must be connected to one another:

- Use two-conductor shielded cable (Belden 8451, or equivalent).
- At the 222A's output (and at the output of other equipment in the system), connect the cable's shield to ( ) terminal for that channel. connect the rd (or white) wire to the channel's HI terminal, and the black wire to the channel's LO terminal.
- In difficult environments it may be necessary to isolate the 222B with output transformers.

Grounding (continued)

Audio Input:

- Input connections are the same whether the the driving source is balanced or unbalanced.
- Do not connect the cable shield — it should be connected at the source end only. Connect the red (or white) wire to the appropriate HI input terminal, and the black wire to the corresponding LO input terminal.
- If the output of another unit is unbalanced and does not have separate chassis ground ($\not\!\!\!

Notes:

Section 3 Operation

page contents

3-2 222A Controls and Displays

3-3 More About Stereo Spatial Enhancement

222A Controls and Displays

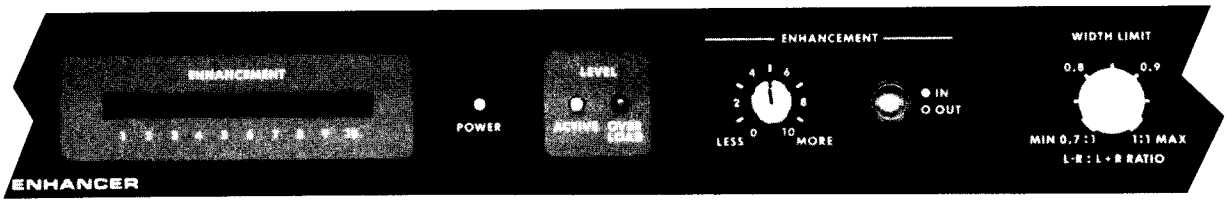

ENHANCEMENT display shows the relative amount of enhancement (the display is not calibrated to any standard unit of measure).

POWER Indicator lights when the unit is powered.

LEVEL Indicators show the status of the enhancement circuitry:

ACTIVE Indicator lights when the level of audio signal into the 222A is high enough to activate the spatial enhancement circuitry.

OVERLOAD Indicator lights when the enhancement circuitry is overloaded. If this indicator lights, reduce the level of the signal presented to the 222A's input.

ENHANCEMENT control determines the relative amount of stereo spatial enhancement. Start with a setting of 5, then experiment to find the best setting for your situation. Note that even when the control is set to LESS, some enhancement will occur; use the ENHANCEMENT IN/OUT button to completely defeat spatial enhancement.

ENHANCEMENT IN/OUT button enables or defeats spatial enhancement. When this button is in the OUT position, audio passes through the 222A without enhancement (but does not bypass any circuitry — the 222A must be powered if signal is to pass through it).

WIDTH LIMIT control determines the maximum spatial enhancement that the 222A will produce. The ratio of peak difference (L–R) to peak sum (L+R) modulation that can be produced by the enhancement process can be adjusted from 0.7:1 to 1:1. Set this control to MAX (1:1 L–R to L+R ratio).

The 222A is shipped with a plastic cap covering the access hole for the WIDTH LIMIT control.

(In some units, the WIDTH LIMIT control is located internally — to access it, remove the top cover. The internal trim is set to MAX when turned fully clockwise.)

More About Stereo Spatial Enhancement

Psychoacoustic research has established that the initial attack transient of a sound is the most important factor in subjectively determining the localization of the sound in speech and music.

The 222A develops a difference (L–R) signal from the incoming stereo signal, then increases the relative level of the L–R signal during attack transients *only*. This process increases the apparent width of the stereo image. The ENHANCEMENT control scales the relative amount of L–R increase.

When no attack transients are detected, no enhancement occurs. The 222A does not, therefore, exaggerate reverberation decays (which are essentially free of attack transients) or ambient sound (which usually has relatively few pronounced attack transients).

To prevent excessive enhancement, which could introduce excessive multipath distortion in FM stereo applications or overload equipment following the 222A (such as an audio processor), the enhancement circuitry is inhibited when the ratio of the enhanced L–R signal to the L+R signal exceeds a certain threshold. The WIDTH LIMIT control sets the threshold.

The WIDTH LIMIT control limits the amount of spatial *enhancement* only. The 222A will not *decrease* the L–R:L+R ratio of the source material if it exceeds the ratio to which the control is set (no stereo enhancement would occur either).

The large majority of 222A users report no increases in perceived multipath distortion, regardless of how the 222A's controls are set. There has, however, been some indication that the 222A can increase perceived multipath distortion in areas that are prone to multipath problems. Increases in perceived multipath distortion are unlikely anywhere if the ENHANCEMENT control is set to 5, as we recommend.

For troublesome environments, try setting the WIDTH LIMIT control lower than MAX. Determine the proper settings for the WIDTH LIMIT and ENHANCEMENT controls by experimenting with different receivers in areas known to have significant multipath problems.

Notes:

Section 4
Maintenance

page contents

4-2 Routine Maintenance

4-2 Getting Inside the Chassis

4-3 Performance Evaluation, Alignment

CAUTION

The installation and servicing instructions in this manual are for use by qualified personnel only. To avoid electric shock, do not perform any servicing other than that contained in the Operating Instructions unless you are qualified to do so. Refer all servicing to qualified service personnel.



Routine Maintenance

No routine maintenance of this product is required.

If the front panel becomes soiled, clean it with a mild household detergent and a damp cloth. Stronger solvents should not be used because they may damage plastic parts, paint, or the silk-screened lettering (99% isopropyl alcohol can be safely used).

Getting Inside the Chassis



To access the circuit boards, remove all six screws holding the appropriate cover in place, then lift that cover off.

Be sure that power is disconnected before removing covers.

Remove the *top cover* for access to the rear of the front panel or the component side of the main circuit board.

Remove the *bottom cover* for access to the solder side of the main circuit board.

When replacing the covers, replace all screws snugly (be careful not to strip the threads by fastening the screws too tightly).

Performance Evaluation, Alignment

These are instructions for thoroughly checking the performance of the 222A, aligning its enhancement circuitry, and calibrating the ENHANCEMENT display on the front panel. This procedure is useful in detecting and diagnosing problems.

The evaluation includes checks of the power supplies, main audio paths, enhancement VCA circuitry, compressor and enhancer control, display calibration, gating control logic, and output stages.

IMPORTANT: Because the 222A circuitry is highly stable, routine performance evaluation and alignment are *not* required and *not* recommended. The following evaluation procedures are extremely thorough, and they are included primarily for reference. If you are familiar with the operation of your 222A, problems with its circuitry will be readily apparent to you in the audio or in abnormal behavior of the ENHANCEMENT display.

If you must perform these tests, be sure you have the necessary equipment (see page 4-4). If you do not have the proper instruments, please use Orban's excellent factory service facility (see page 5-4).

See assembly drawings in Section 6 for locations of components and test points. *All test points are located on the main circuit board.*

Perform procedures in order without skipping steps.

Equipment required:

Oscilloscope

DC-coupled, preferably dual-trace, with at least 5MHz vertical bandwidth.

Digital voltmeter

Accurate to 0.01%.

Audio voltmeter

Accurate to 2%. Sound Technology 1710B or equivalent preferred.

Low-distortion audio oscillator

With verified residual distortion below 0.003%. Sound Technology 1710B or equivalent preferred.

Sine wave pulse generator

Krohn-Hite 1600, or equivalent.

THD analyzer

With verified residual distortion below 0.003%. Sound Technology 1710B or equivalent preferred.

Silicon diode

Almost any silicon diode will do — 1N4148, 1N914, or 1N4004, for example.

10KΩ ±5%, 1/4-watt resistor

Two 620Ω ±5%, 1/4-watt resistors

Pan pot

Such as:

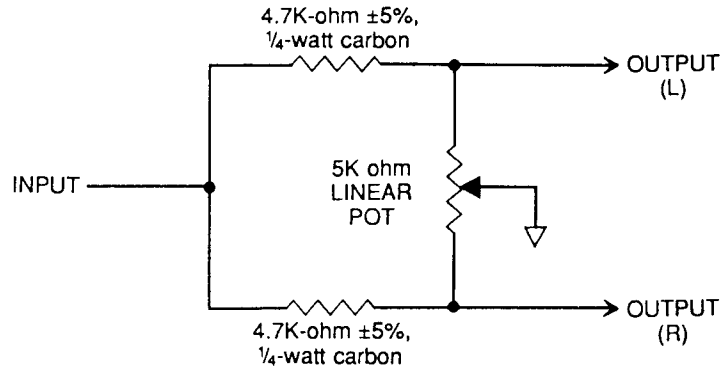

1) Remove the top cover.

Remove the six screws that hold the top cover in place, then lift off the top cover.

2) Record front-panel control settings.

3) Check power supplies.

A❑ Unplug the 222A.

B❑ Verify the following resistances:

Between:	And:	Resistance:
Power cord ground pin	Chassis	0Ω
Each of the power cord blades	Chassis	∞Ω

C❑ Verify that the resistance between the two power cord blades is about 100Ω for a 115V unit (350Ω for a 230V unit).

D❑ Remove the jumper connecting the GROUND (⏚) and (⏚) terminals on the rear panel.

E❑ Verify the following resistances:

Between:	And:	Resistance:
GROUND (⏚)	GROUND (⏚)	∞Ω
GROUND (⏚)	Chassis	0Ω
GROUND (⏚)	Test point TP11 (power supply common)	0Ω

F❑ Replace the jumper connecting the GROUND (⏚) and (⏚) terminals.

G❑ Power the 222A.

H❑ With an oscilloscope connected to the terminals of large capacitors C50 and C51, verify that the negative unregulated power rail is always between −18V and −26V, and that the positive unregulated power rail is always between +18V and +26V.

I❑ Verify that the outputs of the ±15V regulators at test points TP10 (+) and TP12 (−) are 15.00V ±0.75V.

J❑ Verify with an oscilloscope that the noise and ripple on the regulated power supply rails is less than 4mV peak.

4) Check main audio path.

NOTE: Unless otherwise specified, LO inputs and outputs are connected to circuit ground. Unspecified tolerances are ±100Hz or ±0.5dB.

A❑ Connect a 620Ω resistor between the LEFT OUT HI and LO terminals. Connect a second 620Ω resistor between the RIGHT OUT HI and LO terminals.

B❑ Connect an audio oscillator to the LEFT IN HI terminal. Set the oscillator to 1kHz at +4dBu.

0dBu = 0.775V RMS. For this application, the dBm @ 600Ω scale on voltmeters can be read as if were calibrated in dBu.

C❑ Connect the LEFT OUT LO terminal to the GROUND (⏚) terminal.

D❑ Connect a THD analyzer, oscilloscope, and audio voltmeter to the LEFT OUT HI terminal.

E❑ Verify a +4.0dBu level at the LEFT OUT HI terminal.

F❑ Mute the signal and verify that the residual noise level is below −75dBu. Verify that no "popcorn" noise or oscillation can be observed on the oscilloscope.

G❑ Set the audio oscillator's frequency to 35Hz, and adjust its output level to produce a +18dBu level at the 222A's LEFT OUT HI terminal. Verify that THD is less than 0.01% (0.005% is typical).

H❑ Set the audio oscillator's frequency to 1kHz, and adjust its output level to produce a +18dBu level at the 222A's LEFT OUT HI terminal. Verify that THD is less than 0.01%.

I❑ Set the audio oscillator's frequency to 15kHz, and adjust its output level to produce a +18dBu level at the 222A's LEFT OUT HI terminal. Verify that THD is less than 0.01%.

J❑ Connect the audio oscillator to both the LEFT IN HI and LEFT IN LO terminals (tied together). Set the oscillator to 100Hz at +4dBu.

K❑ Verify that the level at the LEFT OUT HI is below −46dBu.

This verifies a common mode rejection of at least 50dB.

L❑ Disconnect the audio oscillator from the LEFT IN LO terminal.

M❑ Set the audio oscillator to 1kHz at +4dBu.

N❑ With the audio voltmeter and THD analyzer, verify that the level at test point TP6 is +4.0dBu and that THD is below 0.02%.

O❑ Verify that the level at test point TP7 is −2.0dBu and that THD is below 0.02%.

P❑ Check the right channel main audio path by repeating the above using the RIGHT IN and RIGHT OUT terminals.

5) Check and adjust enhancement circuitry.

A❑ Center THUMP NULL trimmer R21 and DISTORTION NULL trimmer R24. Connect TP13 to ground.

> This forces the enhancer VCA to unity gain. If there is no TP13 in your unit, see the note on page 6-19.

B❑ Connect the audio oscillator to the LEFT IN HI terminal. Set the oscillator to 1kHz at +4dBu.

C❑ Connect the audio voltmeter, oscilloscope, and THD analyzer to test point TP5. Verify that the level at TP5 is +4.0dBu.

D❑ Adjust DISTORTION NULL trimmer R24 to null THD, as observed at TP5. Verify that THD at TP5 is below 0.03%.

E❑ Mute the signal and verify that the residual noise at TP5 is below −75dBu. Verify that no "popcorn" noise or oscillation can be observed on the oscilloscope.

F❑ Restore the signal. Disconnect the audio oscillator from the LEFT IN HI terminal.

G❑ Connect the audio oscillator to test point TP14.

H❑ Adjust THUMP NULL trimmer R21 to null the 1kHz feedthrough at TP5.

I❑ Remove the ground from TP13 and disconnect the oscillator from TP14. Disconnect the audio voltmeter, oscilloscope, and THD analyzer from TP5.

6) Check compressor and enhancer control.

A❑ Connect one channel of the oscilloscope to test point TP15, and the other channel to test point TP16.

> If you do not have a dual-trace oscilloscope, connect a digital voltmeter to TP16.

B❑ Connect the output of the audio oscillator to the anode of a silicon diode. Connect the diode's cathode to TP15. Set the oscillator to 1kHz and zero output level.

C❑ Slowly increase the audio oscillator's output level until the voltage at TP16 snaps low. Verify that this occurs when the pulses into TP15 just exceed 7.5V peak.

D❑ Reverse the polarity of the diode between the audio oscillator and TP15. Reduce the oscillator's output level to zero.

E❑ Slowly increase the audio oscillator's output level until the voltage at TP16 snaps low. Verify that this occurs when the pulses into TP15 just exceed 7.5V peak.

F❑ Disconnect the audio oscillator from TP15 and connect it (through the diode) to TP16. Reduce the oscillator's output level to zero.

G❑ Slowly increase the audio oscillator's output level while observing the LEVEL indicators. Verify that the ACTIVE indicator lights when the oscillator's output level is about −4dBu, and that the OVERLOAD indicator lights at about +20dBu.

H❑ Disconnect the audio oscillator and oscilloscope from TP15. Remove the diode from the oscillator's output.

Leave the oscilloscope (or digital voltmeter) connected to TP16.

I❑ Connect the audio voltmeter to test point TP17.

J❑ Connect the audio oscillator to either input of the 222A. Set the oscillator to 1kHz, and increase its output level from zero until the voltage at TP16 starts to go low (indicating that the threshold of compression has been reached).

K❑ Verify that the level at TP17 is +17dBu (±2dB).

L❑ Increase the audio oscillator's output level by 10dB. Verify that the level at TP17 does not increase by more than 1.0dB.

M❑ Disconnect the audio voltmeter from TP17 and connect it to TP18.

N❑ Increase audio oscillator's output level from zero until the voltage at TP16 starts to go low.

O❑ Verify that the level at TP18 is +17dBu (±2dB).

P❑ Increase the audio oscillator's output level by 10dB. Verify that the level at TP18 does not increase by more than 1.0dB.

Q❑ Disconnect the audio oscillator, oscilloscope, and audio voltmeter from the 222A.

7) Calibrate display.

A❑ Connect the cathode of diode CR7 to TP10 (+15V).

B❑ Turn METER CAL trimmer R75 fully counterclockwise.

If the serial number of your 222A is below 1323000, turn R75 fully *clockwise*.

C❑ Turn the ENHANCEMENT control fully clockwise and set the ENHANCEMENT IN/OUT switch to IN.

D❑ Connect the output of the audio oscillator to the anode of a silicon diode. Connect the diode's cathode to a 10KΩ resistor. Connect the other end of the resistor to the terminal of ENHANCEMENT IN/OUT switch S1 that is connected by a wire to solder pad E20.

E❑ Set the oscillator to 1kHz and increase its output level until the reading on the ENHANCEMENT display stops increasing. Verify that the oscillator's output level (before the diode) is about +10dBu.

F❑ Increase the oscillator's output level by 10dB and verify that the ENHANCEMENT display reading does not increase.

G❑ Adjust METER CAL trimmer R75 to achieve a full scale display reading.

H❑ Rotate the ENHANCEMENT control throughout its range. Verify that the display varies accordingly.

I❑ Turn the ENHANCEMENT control fully clockwise.

J❑ Set the ENHANCEMENT switch to OUT. Verify that the ENHANCEMENT display reading drops to 0.

K❑ Set the ENHANCEMENT switch to IN.

L❑ Disconnect CR7 from TP10.

M❑ Verify the ENHANCEMENT display reading decays to 0.

N❑ Disconnect the audio oscillator from the 222A. Remove the diode and resistor from the oscillator's lead.

8) Check gating control logic.

A❑ Verify the presence of +0.67VDC (±0.03V) on pin 11 of IC14.

It doesn't matter whether a signal is present at the 222A's input for this step or for B.

B❑ Verify the presence of -0.67VDC (±0.03V) on pin 8 of IC14.

C❑ Connect the digital voltmeter to test point TP8.

D❑ Rotate the WIDTH LIMIT control. Verify that the voltage at TP8 can be adjusted from -5.25VDC to -7.50VDC (±0.20V).

In some units, the WIDTH LIMIT control is an internal trim and not a front-panel control.

E❑ Turn the WIDTH LIMIT control fully clockwise.

F❑ Disconnect the digital voltmeter from TP8.

G❑ With no input signal, verify with the oscilloscope that pin 14 of IC14 is high (roughly +15V), that pin 1 of IC14 is slightly low (roughly -5V), and that pin 1 of IC12 is low (roughly -15V).

H❑ Connect the pulse generator to both the LEFT IN HI and RIGHT IN HI terminals through the pan pot shown on 4-4. Set the generator for bursts of 3 cycles of 2.5kHz sine wave 30ms apart, at +15dBu.

These parameters are not critical. They can be produced by setting the pulse generator to 2.5kHz and triggering it with 250Hz.

I☐ While observing the oscilloscope, slowly rotate the pan pot from left to right. Verify that the signal varies approximately as indicated below.

"HIGH" is roughly +15V, "LOW" is roughly −15V, and "(LOW)" is roughly −5V.

Pot position:	**LEFT**	→	**CENTER**	→	**RIGHT**
Test point:					
IC14, pin 1	LOW	HIGH	(LOW)	HIGH	LOW
IC14, pin 14	30V pulses	30V pulses	HIGH	30V pulses	30V pulses
IC12, pin1	LOW	HIGH	LOW	HIGH	LOW

J☐ Disconnect the oscilloscope, pulse generator, and pan pot from the 222A.

K☐ Remove the jumpers connecting the LEFT OUT LO and the RIGHT OUT LO terminals to the GROUND (⏚) terminal.

9) Check the output stage.

A☐ With the digital voltmeter, verify that the voltage between the LEFT OUT HI and LEFT OUT (⏚) terminals is less than 15mV (less than 5mV is typical).

B☐ Verify that the voltage between the LEFT OUT LO and LEFT OUT (⏚) terminals is less than 15mV.

C☐ Connect the audio voltmeter between the LEFT OUT HI and LEFT OUT LO terminals.

D☐ Connect the oscilloscope between the LEFT OUT HI and LEFT OUT (⏚) terminals.

E☐ Connect the audio oscillator to the LEFT IN HI terminal. Set the oscillator to 1kHz.

F☐ Increase the audio oscillator's output level to produce a level of +20dBu at the LEFT OUT terminals. Verify that there is no visible clipping up to the +20dBu level.

G☐ Check the right channel output stage by repeating the above, using the RIGHT IN and RIGHT OUT terminals.

H☐ Disconnect all test instruments from the 222A.

10) Return controls to the positions recorded in 2.

Do not readjust any of the internal trimmers.

11) Replace the top cover.

Replace all six screws that hold it in place.

Section 5 Troubleshooting

page contents

5-2 Problems and Possible Causes

5-3 Technical Support
5-4 Factory Service
5-4 Shipping instructions

CAUTION

The installation and servicing instructions in this manual are for use by qualified personnel only. To avoid electric shock, do not perform any servicing other than that contained in the Operating Instructions unless you are qualified to do so. Refer all servicing to qualified service personnel.



Problems and Possible Causes

Always verify that the problem is not in the source material being fed to the 222A, or in other parts of the system.

RFI, hum, clicks or buzzes:

A grounding problem is likely. Review the information on grounding in Section 2.

The 222A's moderate RF suppression should be adequate for the vast majority of installations. However, installation next to a high-power transmitter may still cause problems. Additional RF suppression, careful examination of the grounding scheme, and other techniques familiar to the broadcast engineer may have to be employed. It may help to install output transformers.

Power supply problems:

The voltage regulators are operated conservatively, and can be expected to be extremely reliable. Before replacing the regulators check to see whether other abnormalities in the circuitry (such as a shorted IC) may have caused excessive current demand. This scenario would in turn cause the regulator ICs to either current limit or go into thermal shutdown (the two built-in protective modes). If it becomes necessary to replace a regulator, ensure that you replace its heat dissipater securely.

Regulators IC50 and IC51 are frequency-compensated by C52, and C53 at their outputs, to prevent high-frequency oscillations. If C52 or C53 ever needs to be replaced, a low-inductance aluminum electrolytic must be used. A tantalum can fail if the dielectric is punctured momentarily, thereby triggering the current-delivering capacity of the power supply to cause a runaway condition. A high-inductance aluminum can fail to prevent a regulator from oscillating. Check for oscillation on the power bus with an oscilloscope whenever C52 or C53 has been replaced.

Output module failure:

The 5532 and 411 opamps used in the balanced output module may be freely replaced as necessary. However, the circuit is extremely sensitive to the characteristics of the resistors, so while resistor failure is unlikely, field repair requires replacement of the entire output module in question in order to maintain adequate headroom and common-mode rejection (see page 5-4 for information on factory service).

Pumping or other misbehavior of subsequent audio processing:

The 222A will increase peak levels during attack transients. Orban's OPTIMOD® audio processors will handle these increased peak levels without introducing artifacts. However, we obviously cannot guarantee that every make of audio processor will perform as gracefully—especially if it is an older, single-band design or if it employs fast attack times. If you have problems, you might consider upgrading to Orban processing.

Insufficient spatial enhancement:

This could be due to the nature of the program material. Because the 222A is triggered by significant attack transients in program material, the amount of spatial enhancement produced is somewhat program-dependent. Older recordings and recordings with little attack transient information will tend to result in much less noticeable enhancement than will modern pop music recordings. Additionally, the enhancement is considerably more pronounced on speakers than on headphones.

Also, keep in mind that the 222A was designed to "tastefully" enhance the stereo spatial image in a way that would not cause listener fatigue and tune-outs. The range of the ENHANCEMENT control has been purposely limited to prevent over-enhancement and unnatural sound quality.

Increased multipath distortion:

Certain radios (those with poor capture ratios) may exhibit increased multipath distortion in areas that are prone to multipath problems. Thus far this problem has been reported almost exclusively by those installations in which the ENHANCEMENT control is set higher than 5. (The large majority of 222A users report no multipath problems *regardless* of how the ENHANCEMENT control is set.)

If you experience this problem, try setting the ENHANCEMENT control at or below 5, and the WIDTH LIMIT control below MAX. To determine the optimal settings for these two controls in your installation, experiment with different receivers in areas known to have significant multipath problems.

Technical Support

If you require technical support, contact Orban customer service. Be prepared to accurately describe the problem. Know the serial number of your 222A — this is printed on the rear panel of the unit.

Telephone:	(1) 510/351-3500	or Write:	Customer Service Orban
or Fax:	(1) 510/351-1001		1525 Alvarado Street San Leandro, CA 94577 USA

Factory Service

Before you return a product to the factory for service, we recommend that you refer to this manual. Make sure you have correctly followed installation steps and operation procedures. If you are still unable to solve a problem, contact our Customer Service for consultation. Often, a problem is relatively simple and can be quickly fixed after telephone consultation.

In any case, products will be accepted for factory service *only* after Customer Service has issued a Return Authorization number. This number flags the returned unit for priority treatment when it arrives on our dock, and ties to the appropriate information file.

Also, when you return a product to the factory for service, we recommend you include a letter describing the problem.

Please refer to the terms of your Limited One-Year Standard Warranty, which extends to the first end-user. After expiration of the warranty, a reasonable charge will be made for parts, labor, and packing if you choose to use the factory service facility. Returned units will be returned C.O.D. if the unit is not under warranty. Orban will pay return shipping if the unit is still under warranty. In all cases, transportation charges to the factory (which are usually quite nominal) are paid by the customer.

Shipping Instructions

Use the original packing material if it is available. If it is not, use a sturdy, double-wall carton no smaller than 22 × 12 × × 5 inches (56 × 30 × 13 cm) with a minimum bursting test rating of 200 pounds (91 kg). Place the chassis in a plastic bag (or wrap it in plastic) to protect the finish, then pack it in the carton with at least 1.5 inches (4 cm) of cushioning on all sides of the unit. "Bubble" packing sheets, foam "popcorn," thick fiber blankets, and the like are acceptable cushioning materials; folded newspaper is not. Wrap cushioning materials tightly around the unit and tape them in place to prevent the unit from shifting out of its packing. Close the carton without sealing it and shake it vigorously. If you can hear or feel the unit move, use more packing. Seal the carton with 3 inches (8 cm) reinforced fiberglass or polyester sealing tape, top and bottom in an "H" pattern. Narrower or parcel-post type tapes will not withstand the stresses applied to commercial shipments.

Mark the package with the name of the shipper, and with these words in red:

DELICATE INSTRUMENT, FRAGILE!

Insure the package appropriately. Ship prepaid, *not collect.* Do not ship parcel post. Your **Return Authorization number** must be shown on the label, or the package will *not* be accepted.

Section 6
Technical Data

page contents

6-2 Specifications

6-3 Circuit Description

6-10 Parts List

6-17 Schematics, Assembly Drawings

6-25 Abbreviations

Specifications

Performance

Frequency response: ±0.25dB, 20-20,000Hz.

Total harmonic distortion & noise: <0.02%, 20-20,000Hz at an output level of +18dBm into 600 ohms.

IM distortion: <0.05% at an output level of +18dBm into 600 ohms (60/7000, 4:1).

Noise at output: <-75dBu, 20-20,000Hz. (0dBu = 0.775V RMS)

Installation:

Input

Load impedance: >20KΩ in parallel with 500pF, electronically balanced.

Driving impedance: Ideally 600Ω or less, balanced or unbalanced.

Nominal input level: +4dBu (for inputs between –10 and +8dBu). Can be changed with a simple modification to –10dBu (for inputs between –24 and –6dBu).

Absolute overload point: +20dBu.

Common mode rejection: >50dB.

Connectors: Barrier strip (#5 screws) and XLR-type connectors.

Output

Load impedance: ≥600Ω.

Source impedance: 30Ω ±5%, balanced, floating.

Maximum output level: >+20dBm into 600Ω.

Connectors: Barrier strip (#5 screws) and XLR-type connectors.

Physical

Dimensions: 19" (48.3 cm) wide, 1¾" (4.4 cm) high, 10½" (26.7 cm) deep.

Weight: 6¾ lbs (3 kg) net; shipping weight is 10 lbs (4.5 kg).

Power requirements: 115/230 VAC ±10%, 50-60Hz, 9VA; three-wire power cord attached.

Fuse: ⅛ A 250V Slo-Blo for 115V or 230V operation. 3AG or "T" type as appropriate.

Operating temperature range: 32-113°F (0-45°C).

Humidity: 0-95% relative humidity, non-condensing.

Warranty:

One year, parts and labor: Subject to the limitations set forth in Orban's Standard Warranty Agreement.

Specifications subject to change without notice.

Circuit Description

On the following pages, a detailed description of each circuit's function is accompanied by a component-by-component description of that circuit. **Keywords are highlighted** throughout the circuit descriptions to help you quickly locate the information you need.

The circuitry is described in six major blocks: differential input amplifiers, voltage-controlled amplifiers, output line drivers, enhancement control, displays, and power supplies.

1. Overview

(U.S. patent #4,837,824)

The **block diagram** on 6-18 illustrates the following overview of the 222A's circuitry.

Psychoacoustic research has established that the **initial attack transient** of a sound is the most important factor in subjectively determining the localization of the sound in speech and music.

The 222A derives a **control signal** from the envelope of the L+R signal that follows the attack transients within the L+R signal. It uses this control signal to determine the gain of a VCA that **increases the L–R level**. When this level is increased, the **apparent width** of the stereophonic image also increases.

In the 222A, enhancement of L–R occurs only when attack transients have been detected in the L+R signal. When no attack transients have been detected, no enhancement occurs. Therefore, the circuit does not exaggerate **reverberation decays** and **ambient sound**, because these sounds are essentially free of attack transients.

The attack transients are derived by a proprietary circuit inside a potted **control module**. The control circuitry also includes a **compressor** with a gain controlled by the peak level of the L+R signal so that this peak level remains constant at the compressor's output. The compressor includes a **tracking VCA** that processes the enhanced L–R signal so the enhanced L–R, scaled by the peak level of the L+R signal, is present at the output of the tracking VCA. The scaled, enhanced L–R signal is applied to a **window comparator**. The window comparator determines whether the ratio of the enhanced L–R to L+R is within a certain "window." If the ratio exceeds a threshold of approximately unity, the enhancement circuitry is gated by the window comparator to prevent further increases in the ratio. Conversely, if the ratio is too low, the circuit assumes that the input signal is monophonic, and gates the enhancer to prevent it from increasing slight residual channel imbalances or L–R noise.

2. Differential Input Amplifiers

The left and right channel input signals are applied to **differential input amplifiers**, which act like "active transformers": they respond with unity gain to the *difference* between the signals present at their + and − inputs, but reject signals that appear identically on these inputs, thereby **rejecting "common-mode" noise and hum.**

The buffered outputs of the differential amplifiers are applied to another **differential amplifier**, which derives the **L−R (stereo difference) signal.** This L−R signal is applied to a voltage-controlled amplifier (VCA), which controls the amount of **extra L−R signal** to be added back into the main signal to achieve enhancement.

Component-level description:

The unenhanced left and right stereophonic signals are applied to **differential input amplifiers** IC1b and IC2b, respectively.

The buffered left and right outputs of IC1b and IC2b are applied to **differential amplifier** IC7b which derives the **L−R signal.** This L−R signal is applied to a voltage-controlled amplifier, which controls the amount of **extra L−R signal** to be added back into the main signal.

3. Voltage-controlled Amplifier (VCA)

The current-controlled **gain block** used in the 222A is a proprietary class-A VCA operated as a two-quadrant analog divider with gain *inversely* proportional to a current injected into one gain-control port, cascaded with a **two-quadrant analog multiplier** with gain *directly* proportional to a current injected into a second gain-control port. For most gains, levels, and frequencies, THD is well under 0.1%. Overload-to-noise ratio (noise measured in a 20–20,000Hz band) is typically 90dB, and is constant with respect to gain and level.

The output of the VCA is summed with the unenhanced left channel signal and subtracted from the unenhanced right channel signal to produce the **enhanced left and right signals.**

Component-level description:

A specially-graded Orban IC contains two matched, non-linear **gain-control blocks** with differential inputs and current outputs. If used alone, one such gain-control block would introduce considerable distortion. Therefore, the first of the two matched blocks, IC9a, is used as the **feedback element** in a high-quality operational amplifier, IC8. The second of the matched blocks, IC9b, is then driven by the **pre-distorted** output of IC8. Pin 6 is the gain-control port of IC9a; pin 3 is the gain-control port of IC9b.

The output of IC8 is first attenuated by R27, R31, C2, and then applied to the input of the feedback element IC9a. The output of IC8 is **pre-distorted** as necessary to force the current *output* of IC9a to precisely and linearly cancel the audio input into the "virtual ground" summing junction of IC8. This same pre-distorted voltage is also connected to the input of IC9b. Thus the output of IC9b (at pin 13) is an undistorted current. This current is converted to a voltage in current-to-voltage converter IC7a and associated components. The output of IC7a is the output of the VCA.

Because IC9a is in the feedback loop of IC8, the gain of the VCA is *inversely* proportional to the gain of IC9a. This gain is fixed by the current through R30.

The gain of the VCA is *directly* proportional to the gain-control current in IC9b and thus acts as a **two-quadrant *multiplier***, multiplying the audio by the control current. The gain control current is provided by voltage-to-current converter IC11a and associated circuitry (discussed below under "Enhancement Control").

Second-harmonic distortion is introduced by differential offsets in either section of IC9. This distortion is canceled by applying a nulling voltage directly to the input of IC9b through resistor network R24, R25, R26.

If the VCA is not perfectly balanced, control current feedthrough can cause **"thumps"** to appear at the output. These are equivalent to multiplying the control current by DC. The thumps can be eliminated by applying the correct DC offset to the VCA input to null this equivalent DC multiplication. The adjustable DC offset is provided by R20, R21.

C3, C4, R28, R29 provide frequency-compensation to prevent the VCA from **oscillating supersonically.**

The signal appearing at the output of IC7a is summed with the unenhanced left channel signal in IC2a and subtracted from the unenhanced right channel signal in IC1a to produce the enhanced left and right channel signals.

4. Output Line Drivers

The enhanced left and right channel signals are each applied to an **output module** which converts the unbalanced single-ended signal to a balanced, floating output. Output impedance is 30 ohms, ±5%.

Simpler "electronically-balanced to ground" output stages can cause problems because grounding one side of their outputs to unbalance them will short an output amplifier to ground. In contrast, the 222A output stage is balanced and *floating*, so it simulates a **true transformer output**. Because the output is floating, either side can be grounded to obtain an unbalanced output. When either side is grounded, the overall output level changes very little (less than 0.5dB), and no ill effects occur. The output of the 222A can be freely connected to a **patch bay** without concern that problems may occur if one side of the output is grounded.

Component-level description:

The 411 opamp used in the balanced output module is a **low-offset servo amplifier** which centers the DC level at the output of the module around ground. The floating characteristic is achieved by complex cross-coupled positive and negative feedback between two 5532 opamps, and its operation is not readily explainable except by a detailed mathematical analysis. Opamps may be replaced; resistors are specially matched and should not be replaced (see 5-2).

5. Enhancement Control

The **L+R signal**, produced by summing the enhanced left and right signals, is routed through the L+R control VCA to the **control module**. This module has two outputs: a **compressor control voltage**, and an **enhancement control voltage** used to determine the gain of the L–R signal.

Because the **L+R control VCA** does not carry audio that will be applied to the main signal path, it can have poorer noise and distortion performance than the more complex L–R control VCA used in the audio path.

To prevent loss of loudness in mono reception, the ratio of the enhanced L–R to L+R signal should not exceed unity. Very small L–R signals should not be enhanced, since these often represent signals that are *intended* to be mono, but which suffer from slight interchannel amplitude or phase imbalances that introduce small spurious L–R signals. **Gating circuitry** guards against both types of excessive enhancement.

Component-level description:

The **L+R signal** is produced by summing the enhanced left and right channel signals in resistors R18, R19. The L+R signal is then applied to the input of **L+R Control VCA** IC4a.

IC4a's output is applied through C9 to the input of the **control module**. The module's **compressor control voltage** output appears on pin 5; the **enhancement control voltage** output (used to determine the gain of the L–R VCA IC8, IC9) appears on pin 9.

Because the L+R control VCA can have poorer noise and distortion performance than the L–R VCA IC8, IC9, IC4a's internal linearizing diodes are used instead of the more complex and expensive linearizing scheme used in the IC8, IC9 VCA.

VCA IC4a has a "decilinear" control signal characteristic: the gain (in dB) of the VCA is directly proportional to the control signal at the output of IC3a, which buffers the compressor control signal developed in the control module.

The gain of IC4a is inversely proportional to the current through its internal linearizing diodes. The decilinear characteristic is developed by an exponential converter, which applies its output current to pin 8 of IC4a.

The **exponential current converter** consists of log/antilog multiplier IC6 and associated components, which multiply the current flowing in R47 by the exponential of the voltage on the base of IC5c. The current gain of the multiplier (and thus the output current of the exponential converter) increases as the voltage on the base of IC5 (pin 8) becomes more negative.

The current output of the log/antilog multiplier appears on the collector of IC5 (pin 3). Because it is the wrong polarity and level to correctly drive the control-current port of IC4a, it is applied to a **current inverter** IC6a, IC5d, R43, R46, C10. This circuit has a gain of 6.66×.

A voltage proportional to the current output of IC5a (pin 3) is developed across R46 due to the feedback action of IC6a. C10 stabilizes IC6a against **oscillations**. Feedback forces IC6a's – and + inputs to be at the same voltage. Thus, the same voltage that appears across R46 also appears across R43, and current flows in R43 in proportion to the ratio between the values of R46 and R43.

This current all flows into the emitter of IC5d because the input bias current of IC6a is negligible. And because IC5d's base current is small compared to its emitter current, essentially the same current flows out of IC5d's collector into the gain-control port of IC4a and IC4b.

The base of IC5d is grounded, and its emitter sits at +0.6V. This forces both the + and - inputs of IC6a to also sit at +0.6V, and ensures **correct bias voltage** for IC5a's collector (pin 3).

CR6 protects IC5d from reverse base-emitter voltage which could otherwise cause **junction breakdown** and **latch-up** of the entire current-inverter circuit.

The **L-R enhancement control voltage** appearing at pin 9 of the control module is **buffered** by peak detector IC11b, CR5, C8. R36 determines the decay time of the peak detector.

The output of the peak detector is further smoothed by network R35, C7, CR2, CR3, CR4, and then applied to **voltage-to-current converter** IC11a and associated circuitry.

The low side of **ENHANCEMENT control** R34 is connected (in series with stop resistor R69) to the virtual ground provided at the - input of inverter IC10, which provides the signal to drive the LED **bargraph enhancement display**.

Feedback forces the - input of IC11a to be at the same voltage as its + input. Current through R34 is thus determined by the control voltage at the + input of IC11a as divided by the total resistance of R34 and R69. This current is provided by Q1. Virtually the same current flows from the collector of Q1 into the gain control port of IC9b to determine the amount of L-R enhancement. The amount of enhancement is, therefore, proportional to the control voltage at the + input of IC11b and inversely proportional to the sum of resistors R34 and R69. This allows the user to scale the amount of enhancement to taste with the **ENHANCEMENT control**.

In order to make the **gating circuitry** (which prevents excess enhancement) work correctly over a wide range of L+R levels, the enhanced L-R signal is derived in IC3b, and is then scaled by the L+R signal in VCA IC4b, which accurately tracks the gain of VCA IC4a. The L-R signal is compressed in exact proportion to the compression that is applied to the L+R signal. This compression tends to keep the peak level of the L+R signal constant. The output of the L-R VCA IC4b is thus a compressed, enhanced L-R signal, and represents the *ratio* of the enhanced L-R to the L+R signal (the level of the L-R signal is normalized to the peak level of the L+R signal, even if the absolute level of the L+R signal varies widely).

The compressed enhanced L-R signal is applied to **window comparator** IC14, which decides whether stereo is present and whether the ratio of L-R to L+R is excessive.

IC14c, IC14d are the **"stereo present" detector** (IC14d handles the positive-going side of the enhanced compressed L-R signal; IC14c handles the negative side). ±0.67 VDC reference voltages are applied to pins 11 and 8. Pins 9 and 10 are driven by the normalized, enhanced L-R signal (filtered through low-pass filter IC13a to reduce the sensitivity of the circuit to noise).

If sufficient L-R is present to turn on IC14c, IC14d, these ICs will turn on Q2 and pull C17 positive through R64. This, in turn, will force the output of IC12b positive and permit R68 to pull the gate of Q3 to +15V, which will turn off Q3 and permit enhancement to occur normally.

If pin 7 of IC12b goes negative, either because of insufficient L–R level (as sensed by IC14c, IC14d) or too much L–R level (as sensed by IC14a, IC14b), then IC12b will pull the gate of Q3 to ground, turning it on and shorting the enhancement line to ground to defeat the enhancement.

The reference voltage on IC14a, IC14b is adjustable with **WIDTH LIMIT control** R56. R56 determines where between 0.7:1 and 1:1 L–R:L+R ratio that IC14a, IC14b start to suppress enhancement.

6. Displays

The **ENHANCEMENT display** is driven by signal derived from the L–R control VCA. The **bargraph driver** consists of ten comparators (with current-regulated outputs) arranged to produce a display with a linear scale.

The **LEVEL display** consists of two LEDs: one for **ACTIVE** and one for **OVERLOAD**. The LEVEL display is essentially a gain-reduction display for the L+R compressor.

A **POWER indicator** lights when the 222A is powered.

Component-level description:

The **ENHANCEMENT display** is driven by LM3914 **bargraph driver** IC1. The control current for L–R gain-control block IC9b flows into the "virtual ground" (–) input of IC10, which inverts the signal. IC10's output is a positive-going voltage proportional to IC9b's gain-control current. This voltage is mixed with a 50 or 60Hz "dither" signal through C18, R72 (connected to the power transformer secondary), and then applied to the input of bargraph driver IC1.

The ten LEDs in the **bargraph** are connected in series. IC1 applies current (through any one of pins 1 through 10) to the appropriate node to light the desired LEDs.

Q1 is used as a zener diode to reduce the supply voltage to the IC1 so that it is within the chip's 25V maximum rating. R1 sets the current through the LED bargraph.

IC1 has an internal string of series resistors that provide reference voltages for its ten comparators. The bottom of this string is grounded at pin 4; the top of the string is provided with approximately +1.75VDC from from voltage divider R73, R74, R75 (referenced to the +15VDC regulated power supply). R75 can be adjusted to calibrate the full-scale sensitivity of the display.

C1 bypasses the IC1 power supply to prevent IC1 from **oscillating**.

The **LEVEL display** LEDs are driven by the compression-control voltage developed by the control module. This voltage is applied to comparators IC12c and IC12d. If no gain reduction is occurring in the L+R compressor, the control voltage is 0VDC. In this case, the outputs of IC12c and IC12d are pulled down to –15V and will shunt current away from all but the **POWER** LED. The POWER LED is always on when the unit is powered.

When the negative-going gain-reduction voltage is lower than –0.11VDC, IC12c's output circuit is opened, and the **ACTIVE** LED lights. If the gain-reduction voltage becomes more negative than –9.97VDC, control loop saturation of the control compressor is imminent. In this case, the output circuit

of IC12d opens and the **OVERLOAD** LED lights to indicate that the input level to the 222A should be reduced. (This should never occur if the signal into the 222A is +4dBu.)

7. Power Supply

Unregulated DC is supplied by two full-wave diode rectifiers. The nominal unregulated voltage is ±22 volts DC at rated line voltage. This will vary widely with line voltage variations. **Regulator dropout** will occur if the unregulated voltage falls below about ±17.8 volts.

Regulated voltages are supplied by a pair of overrated 500mA "three-terminal" IC regulators. Because they are operated conservatively, they can be expected to be extremely reliable.

Component-level description:

The primary of power transformer T1 can be strapped (on the transformer) for either 115-volt or 230-volt operation (the two sections of the primary are paralleled for 115-volt operation and connected in series for 230-volt operation). The center-tapped secondary supplies about 38VAC to two full-wave diode rectifiers located in package CR50. These rectifiers supply **unregulated DC** through energy storage capacitors C50 and C51.

Two "three-terminal" regulators (IC50, IC51) deliver **regulated DC** to the circuitry. IC50 and IC51 are frequency-compensated by C52, C53 at their outputs to prevent high-frequency oscillations. Small 0.1μF/25V ceramic capacitors bypass the power busses to ground locally throughout the board to prevent signal-carrying ICs from oscillating due to excessive power-lead inductance.

(If replaced, C52 and C53 *must* be replaced by low-inductance aluminum electrolytic capacitors *only* — see "Power supply problems" on 5-2.)

Parts List

Parts are listed by ASSEMBLY, then by TYPE, then by REFERENCE DESIGNATOR. Widely used common parts are not listed; such parts are described generally below (examine the part to determine exact value). See the following assembly drawings for locations of components.

SIGNAL DIODES, if not listed by reference designator in the following parts list, are:

Orban part number 22101-000, Fairchild (FSC) part number 1N4148, also available from many other vendors. This is a silicon, small-signal diode with ultra-fast recovery and high conductance. It may be replaced with 1N914 (BAY-61 in Europe).

(BV: 75V min. @ I_r = 5μA I_r: 25nA max. @ V_r = 20V V_f: 1.0V max. @ I_f = 100mA t_{rr}: 4ns max.) See Miscellaneous list for **ZENER DIODES** (reference designator VRxx).

RESISTORS should only be replaced with the same style and with the *exact* value marked on the resistor body. If the value marking is not legible, consult the schematic or the factory. Performance and stability will be compromised if you do not use exact replacements. Unless listed by reference designator in the following parts list, resistors are:

Metal film resistors have conformally-coated bodies, and are identified by five color bands or a printed value. They are rated at 1/8 watt @ 70°C, ±1%, with a temperature coefficient of 100 PPM/°C. Orban part numbers 20038-xxx through 20045-xxx, USA Military Specification MIL-R-10509 Style RN55D. Manufactured by R-Ohm (CRB-1/4FX), TRW/IRC, Beyschlag, Dale, Corning, Matsushita.

Carbon film resistors have conformally-coated bodies, and are identified by four color bands. They are rated at 1/4 watt @ 70°C, ±5%. Orban part numbers 20001-xxx, Manufactured by R-Ohm (R-25), Piher, Beyschlag, Dale, Phillips, Spectrol, Matsushita.

Carbon composition resistors have molded phenolic bodies, and are identified by four color bands. The 0.090 × 0.250 inch (2.3 × 6.4 mm) size is rated at 1/4 watt, and the 0.140 × 0.375 inch (3.6 × 9.5 mm) size is rated at 1/2 watt, both ±5% @ 70° C. Orban part numbers 2001x-xxx, USA Military Specification MIL-R-11 Style RC-07 (1/4 watt) or RC-20 (1/2 watt). Manufactured by Allen-Bradley, TRW/IRC, Matsushita.

Cermet trimmer resistors have 3/8-inch (9 mm) square bodies, and are identified by printing on their sides. They are rated at 1/2 watt @ 70°C, ±10%, with a temperature coefficient of 100 PPM/°C. Orban part numbers 20510-xxx and 20511-xxx. Manufactured by Beckman (72P, 68W- series), Spectrol, Matsushita.

Obtaining spare parts:

Special or subtle characteristics of certain components are exploited to produce an elegant design at a reasonable cost. *It is therefore unwise to make substitutions for listed parts.* Consult the factory if the listing of a part includes the note "selected" or "realignment required."

Orban normally maintains an inventory of tested, exact replacement parts that can be supplied quickly at nominal cost. Standardized spare parts kits are also available. When ordering parts from the factory, please have available the following information about the parts you want:

Orban part number
Reference designator (e.g., C3, R78, IC14)
Brief description of part
Model, serial, and "M" (if any) number of unit — see rear-panel label

To facilitate future maintenance, parts for this unit have been chosen from the catalogs of well-known manufacturers whenever possible. Most of these manufacturers have extensive worldwide distribution and may be contacted through their local offices. Their USA headquarters addresses are given on 6-16.

REF DES	DESCRIPTION	ORBAN P/N	VEN (1)	VENDOR P/N	ALTERNATE VENDORS(1)	NOTES
FINAL ASSEMBLY						
Capacitors						
C1-8	Ceramic Disc, 1KV, 10%; 0.001uF	21112-210	CRL	DD-102	MUR	
Inductors						
L1,2	Inductor, RF Choke, 1mH, 160 mA	29502-000	MIL	4662		
Miscellaneous						
F1	Fuse, 3AG, Slo-Blo, 1/8A	28004-113	LFE	313.125	BUS	
NONE	Line Cord, AC, 3 Wire	28101-000	BEL	17534		
T1	Transformer, Power; 38VCT, 10VA	55005-000	ORB			
Resistors						
R56	Pot, Single; 10K, (5050)	20720-000	ORB			Linear "WIDTH LIMIT"
Switches						
S1	Switch, Single, Push-Push, DPDT	26112-000	SCH	F-Series		"ENHANCEMENT IN/OUT"
OUTPUT MODULE ASSEMBLY						
Capacitors						
C1	Met. Polyester, 63V, 5%; 0.1uF	21442-410	MAL	168104J63A	WIMA	
C2,3	Monolythic Ceramic, 50V, 20%; 0.1uF	21123-410	SPR	1C25 Z5U104M050B	KEM	
Integrated Circuits						
IC1	Linear, Single Opamp	24017-202	NAT	LF411CN		
IC2	Linear, Dual Opamp	24207-202	SIG	NE5532N	TI,EXR	

FOOTNOTES:
(1) See last page for abbreviations
(2) No Alternate Vendors known at publication
(3) Actual part is specially selected from part listed, consult Factory
(4) Realignment may be required if replaced, see Circuit Description and/or Alignment Instructions

SPECIFICATIONS AND SOURCES FOR REPLACEMENT PARTS

STEREO SPATIAL ENHANCER Model 222A

FINAL ASSEMBLY, OUTPUT MODULE ASSEMBLY

REF DES	DESCRIPTION	ORBAN P/N	VEN (1)	VENDOR P/N	ALTERNATE VENDORS (1)	NOTES
PCB DISPLAY ASSEMBLY						
Capacitors						
C1	Alum., Radial, 63V; 2.2uF	21209-522	SPR	502D 225G063BB1C	PAN	
C2,3	Monolythic Ceramic, 50V, 20%; 0.1uF	21123-410	SPR	1C25 Z5U104M050B	KEM	
Integrated Circuits						
IC1	Digital, Display Driver	24712-302	NAT	LM3914		
LEDs						
CR1	LED, Green	25106-002	HP	HLMP-1503	GI	"POWER"
CR2	LED, Yellow	25106-001	HP	HLMP-1400	GI	"ACTIVE"
CR3	LED, Red	25106-003	HP	HLMP-1300	GI	"OVERLOAD"
DS1	LED Array, 10-Yellow	25153-000	ORB			"ENHANCEMENT"
Transistors						
Q1	Transistor, Signal, NPN	23202-101	MOT	2N4400	FSC	

FOOTNOTES:
(1) See last page for abbreviations
(2) No Alternate Vendors known at publication
(3) Actual part is specially selected from part listed, consult Factory
(4) Realignment may be required if replaced, see Circuit Description and/or Alignment Instructions

SPECIFICATIONS AND SOURCES FOR REPLACEMENT PARTS

STEREO SPATIAL ENHANCER Model 222A

PCB DISPLAY ASSEMBLY

REF DES	DESCRIPTION	ORBAN P/N	VEN (1)	VENDOR P/N	ALTERNATE VENDORS (1)	NOTES
PCB DISPLAY ASSEMBLY						
Capacitors						
C1	Alum., Radial, 63V; 2.2uF	21209-522	SPR	502D 225G063BB1C	PAN	
C2,3	Monolythic Ceramic, 50V, 20%; 0.1uF	21123-410	SPR	1C25 Z5U104M050B	KEM	
Integrated Circuits						
IC1	Digital, Display Driver	24712-302	NAT	LM3914		
LEDs						
CR1	LED, Green	25106-002	HP	HLMP-1503	GI	"POWER"
CR2	LED, Yellow	25106-001	HP	HLMP-1400	GI	"ACTIVE"
CR3	LED, Red	25106-003	HP	HLMP-1300	GI	"OVERLOAD"
DS1	LED Array, 10-Yellow	25153-000	ORB			"ENHANCEMENT"
Transistors						
Q1	Transistor, Signal, NPN	23202-101	MOT	2N4400	FSC	

FOOTNOTES:
(1) See last page for abbreviations
(2) No Alternate Vendors known at publication
(3) Actual part is specially selected from part listed, consult Factory
(4) Realignment may be required if replaced, see Circuit Description and/or Alignment Instructions

SPECIFICATIONS AND SOURCES FOR REPLACEMENT PARTS

STEREO SPATIAL ENHANCER Model 222A

PCB DISPLAY ASSEMBLY

REF DES	DESCRIPTION	ORBAN P/N	VEN (1)	VENDOR P/N	ALTERNATE VENDORS (1)	NOTES
PCB MAIN ASSEMBLY						
Capacitors						
C1	Cap, Selected; .0171uF-.0180uF	21424-002	ORB			3
C2	Mica, 500V, +1/2pF -1/2pF; 5pF	21017-005	CD	CD15-CD050D03	SAN	
C3,4	Mica, 500V, 5%; 150pF	21020-115	CD	CD15-FD151J03	SAN	
C5	Met. Polyester, 100V, 10%; 0.1uF	21441-410	WIM	MKS-4100V5.0.1	WES,SIE	
C6	Mica, 500V, 5%; 470pF	21024-147	CD	CD19-FD471J03	SAN	
C7	Met. Polyester, 100V, 10%; 0.039uF	21441-339	WES	60C 393K250	SIE	
C8,9	Met. Polyester, 100V, 10%; 0.1uF	21441-410	WIM	MKS-4100V5.0.1	WES,SIE	
C10	Mica, 500V, +1/2pF -1/2pF; 10pF	21017-010	CD	CD15-CD100D03	SAN	
C11	Mica, 500V, 5%; 100pF	21020-110	CD	CD15-FD101J03	SAN	
C12	Mica, 500V, +1/2pF -1/2pF; 10pF	21017-010	CD	CD15-CD100D03	SAN	
C13	Met. Polyester, 100V, 10%; 0.1uF	21441-410	WIM	MKS-4100V5.0.1	WES,SIE	
C14,15	Polypropylene, 50V, 2.5%; 0.01uF	21702-310	NOB	CQ15P1H103GPP	WES	
C16	Polypropylene, 50V, 2.5%; 1000pF	21702-210	NOB	CQ15P1H102GPP	WIM	
C17	Met. Polyester, 100V, 10%; 0.1uF	21441-410	WIM	MKS-4100V5.0.1	WES,SIE	
C18	Met. Polyester, 100V, 10%; 0.01uF	21441-310	WES	60C 103K630	SIE, WIM	
C19-28	Monolythic Ceramic, 50V, 20%; 0.1uF	21123-410	SPR	1C25 Z5U104M050B	KEM	
C29-49	Not used	---				
C50,51	Alum., Axial, 40V; 470uF	21224-747	SIE	B41283 470 40	PAN	
C52,53	Alum., Radial, 25V; 100uF	21206-710	PAN	ECE-A1EV101S		
C54-57	Monolythic Ceramic, 50V, 20%; 0.1uF	21123-410	SPR	1C25 Z5U104M050B	KEM	
Diodes						
CR9-49	Not used	---				
CR50	Diode, Bridge, 200V, 1A	22301-000	VARO	VE-27	GI	

FOOTNOTES:
(1) See last page for abbreviations
(2) No Alternate Vendors known at publication
(3) Actual part is specially selected from part listed, consult Factory
(4) Realignment may be required if replaced, see Circuit Description and/or Alignment Instructions

SPECIFICATIONS AND SOURCES FOR REPLACEMENT PARTS

STEREO SPATIAL ENHANCER Model 222A

PCB MAIN ASSEMBLY - Capacitors, Diodes

REF DES	DESCRIPTION	ORBAN P/N	VEN (1)	VENDOR P/N	ALTERNATE VENDORS(1)	NOTES
Integrated Circuits						
IC1,2	Linear, Dual Opamp	24207-202	SIG	NE5532N	TI,EXR	
IC3	Linear, Dual Opamp	24206-202	TI	TL072CP	MOT	
IC4	Linear, Dual Opamp	24208-303	ORB	CA3280AG Selected		
IC5	Multiple FET	24406-302	RCA	CA3096AE		
IC6	Linear, Dual Opamp	24209-202	NAT	LF412CN		
IC7	Linear, Dual Opamp	24207-202	SIG	NE5532N	TI,EXR	
IC8	Linear, Single Opamp	24014-202	SIG	NE5534N	TI	
IC9	Linear, Dual Opamp	24208-303	ORB	CA3280AG Selected		
IC10	Linear, Single Opamp	24017-202	NAT	LF411CN		
IC11	Linear, Dual Opamp	24209-202	NAT	LF412CN		
IC12	Quad Comparator	24710-302	NAT	LM339		
IC13	Linear, Dual Opamp	24206-202	TI	TL072CP	MOT	
IC14	Quad Comparator	24710-302	NAT	LM339		
IC15	Linear, Dual Opamp	24202-202	RAY	RC4558NB	MOT,FSC	
IC50	D.C. Regulator, 15V Positive	24304-901	FSC	F78M15UC	TI	
IC51	D.C. Regulator, 15V Negative	24303-901	FSC	F79M15AUC	TI	
Modules						
A1	Module Assy, Control	31150-000-xx*	ORB			*Add suffix printed on part
A2,3	Module Assy, Output	31160-001-xx*	ORB			*Add suffix printed on part
Resistors						
R1-4	Resistor Set, MF; 20.0K	28521-001	ORB			3
R9	Resistor Set, MF; 20.0K	28521-001	ORB			3
R11	Resistor Set, MF; 20.0K	28521-001	ORB			3
R34	Pot, Single; 5K, (5050)	20735-000	ORB			Linear "ENHANCEMENT"
Transistors						
Q1,2	Transistor, Signal, PNP	23002-101	MOT	2N4402	FSC	
Q3	Transistor, JFET/P	23407-101	NAT	J174	SIL	

FOOTNOTES:
(1) See last page for abbreviations
(2) No Alternate Vendors known at publication
(3) Actual part is specially selected from part listed, consult Factory
(4) Realignment may be required if replaced, see Circuit Description and/or Alignment Instructions

SPECIFICATIONS AND SOURCES FOR REPLACEMENT PARTS

STEREO SPATIAL ENHANCER Model 222A

PCB MAIN ASSEMBLY - IC's, Modules, Resistors, Transistors

Vendor Codes

AB Rockwell Allen-Bradley
625 Liberty Ave
Pittsburgh, Pa 15222-3123

AD Analog Devices, Inc.
One Technology Way
PO Box 9106
Norwood, MA 02062-9106

AKG AKG Acoustics, Inc.
1525 Alvarado Street
San Leandro, CA 94577

AM Amphenol Corporation
358 Hall Avenue
Wallingford, CT 06492

BEK Beckman Industrial Corporation
4141 Palm Street
Fullerton, CA 92635-1025

BEL Belden Electronic Wire & Cable
PO Box 1980
Richmond, IN 47374

BRN Bourns, Inc
Resistive Components Group
1200 Columbia Avenue
Riverside, CA 92507

BUS Bussmann Division
Cooper Industries
PO Box 14460
St. Louis, MO 63178

CD Cornell-Dubilier Elec.
1700 Rte. 23 North
Wayne, NJ 07470

CRL Mepcopal/Centralab
See Mepcopal

CSC Crystal Semiconductor Corporation
4210-T. South Industrial Dr.
Austin, TX 78744

CTS CTS Corporation
907 North West Blvd.
Elkhart, IN 46514

CW CW Industries
130 James Way
Southampton, PA 18966

DBX dbx
A division of AKG Acoustics, Inc.
1525 Alvarado Street
San Leandro, CA 94577

DEL Delta Products Corp
3225 Laurel View Ct.
Fremont, CA 94538

DUR Duracell, Inc.
Berkshire Industrial Park
Bethel, CT 06801

ELSW Electro Switch
77 King Avenue
Weymouth, MA 02188

EMI Crompton Modutec
920 Candia Rd.
Manchester, NH 03109

EXR Exar Corporation
2222 Qume Dr.
PO Box 49007
San Jose, CA 95161-9007

FR Fair-Rite Products Corp.
PO Box J
Wallkill, NY 12589

FSC Fairchild Camera & Instr. Corp.
See National Semiconductor

GI General Instruments
Optoelectronics Division
See Quality Technologies

HA Harris Semiconductor
1301 Woody Burke Rd.
Melbourne, FL 32901

HO Hoyt Elect. Inst. Works
19 Linden St.
Penacook, NH 03303

HP Hewlett-Packard Co.
Components Group
640 Page Mill Road
Palo Alto, CA 94304

INS Intersil, Inc.
See Harris Semiconductor

ITW ITW Switches
An Illinois Tool Works Co.
6615 W. Irving Park Rd.
Dept. T
Chicago, IL 60634

KEM KEMET Electronics Corporation
Post Office Box 5928
Greenville, South Carolina 29606

KEY Keystone Electronics Corp.
31-07 20th Rd.
Astoria, NY 11105

LFE Littlefuse
A Subsidiary of Tracor, Inc.
800 E. Northwest Hwy
Des Plaines, IL 60016

LT Linear Technology Corp.
1630 McCarthy Blvd.
Milpitas, CA 95035

LUMX Lumex Opto/Components Inc.
292 E. Hellen Road
Palatine, IL 60067

MAL Mallory Capacitor Co.
7545 Rockville Rd.
PO Box 1284
Indianapolis, IN 46241

MAR Marquardt Switches, Inc.
2711-TR Route 20 East
Cazenovia, NY 13035

MAT Matsushita Electric Corp of America
One Panasonic Way
Secaucus, NJ 07094

ME Mepcopal/Centralab
A North American Phillips Corp.
11468 Sorrento Valley Road
San Diego, CA 92121

MID Hollingsworth/Wearnes
1601 N. Powerline Rd.
Pampano, FL 33069

MIL J.W. Miller Division
Bell Industries
306 E. Alondra
Gardena, CA 90247

MOT Motorola Semiconductor
PO Box 20912
Phoenix, AZ 85036

MUR Murata Erie North America
2200 Lake Park Drive
Smyrna, GA 30080

NAT National Semiconductor Corp.
2900 Semiconductor Drive
PO Box 58090
Santa Clara, CA 95051

NEL Crystal Biotech
75 South Street
Hopkinton, MA 01748

NOB Noble U.S.A., Incorporated
5450 Meadowbrook Industrial Ct.
Rolling Meadows, IL 60008

OKI OKI Semiconductor
785 N. Mary Ave.
Sunnyvale, CA 94086-2909

OHM Ohmite Manufactoring Company
3601 Howard Street
Skokie, IL 60076

ORB Orban
A division of AKG Acoustics, Inc.
1525 Alvarado Street
San Leandro, CA 94577

PAN Panasonic Industrial Company
Two Panasonic Way
7E-2T
Secaucus, NJ 07094

QT Quality Technologies, Inc.
610 North Mary Ave.
Sunnyvale, CA 94086

RAL Raltron Electronics Corp.
2315 NW 107th Ave.
Miami, FL 33172

RAY Raytheon Company
Semiconductor Division
350 Ellis Street
Mountain View, CA 94039

RCA RCA Solid State
See Harris Semiconductor

ROHM Rohm Electronics
3034 Owens Dr.
Antioch, TENN 37013

SAE Stanford Applied Engineering, Inc
340 Martin Avenue
Santa Clara, CA 95050

SAN Sangamo Weston Inc.
Capacitor Division
See Cornell-Dubilier

SCH ITT Schadow, Inc.
8081 Wallace Road
Eden Prairie, MN 55344

SIE Siemens Components Inc.
Heimann Systems Div.
186 Wood Avenue South
Iselin, NJ 08830

SIG Philips Components - Signetics
North American Phillips Corp.
811 E. Arques
Sunnyvale, CA 94088

SPR Sprague Electric Co.
41 Hampden Road
PO Box 9102
Mansfield, MA 02048-9102

SW Switchcraft
A Raytheon Company
5555 N. Elston Avenue
Chicago, IL 60630

TAI Taiyo America, Inc.
700 Frontier Way
Bensenville, IL 60106

TDK TDK Electronics Corporation
12 Harbor Park
Port Washington, NY 11050

TI Texas Instruments, Inc.
PO Box 655012
Dallas, TX 75265

TOS Toshiba America, Inc.
9740 Irvine Blvd.
Irvine, CA 92718

TRW TRW Electronics Components
Connector Division
1501 Morse Avenue
Elk Grove Village, IL 60007

VARO Micro Quality Semiconductor, Inc.
PO Box 469013
Garland, TX 75046-9013

WES Westlake
See Mallory Capacitor Co.

WIM Wima Division
2269 Saw Mill Rd.
Building 4C
PO Box 217
Elmsford, NY 10533

ZI ZILOG Inc.
210 Hacienda Ave.
Campbell, CA 95008

Schematics, Assembly Drawings

The following drawings are included in this manual:

Page	Function	Circuit Board	Drawing
6-18	BLOCK DIAGRAM		
6-19	Audio Processing	Main	Assembly Drawing
6-20			Schematic
6-21			Schematic
6-22	Output	Output Module	Assembly Drawing
6-23			Schematic
6-24	Displays, Controls	Front Panel	Assembly Drawing

These drawings reflect the actual construction of your unit as accurately as possible. Any differences between the drawings and your unit are almost undoubtedly due to product improvements or production changes since the publication of this manual. Major changes are described in addenda located at the front of this manual.

If you intend to replace parts, please read 6-10.

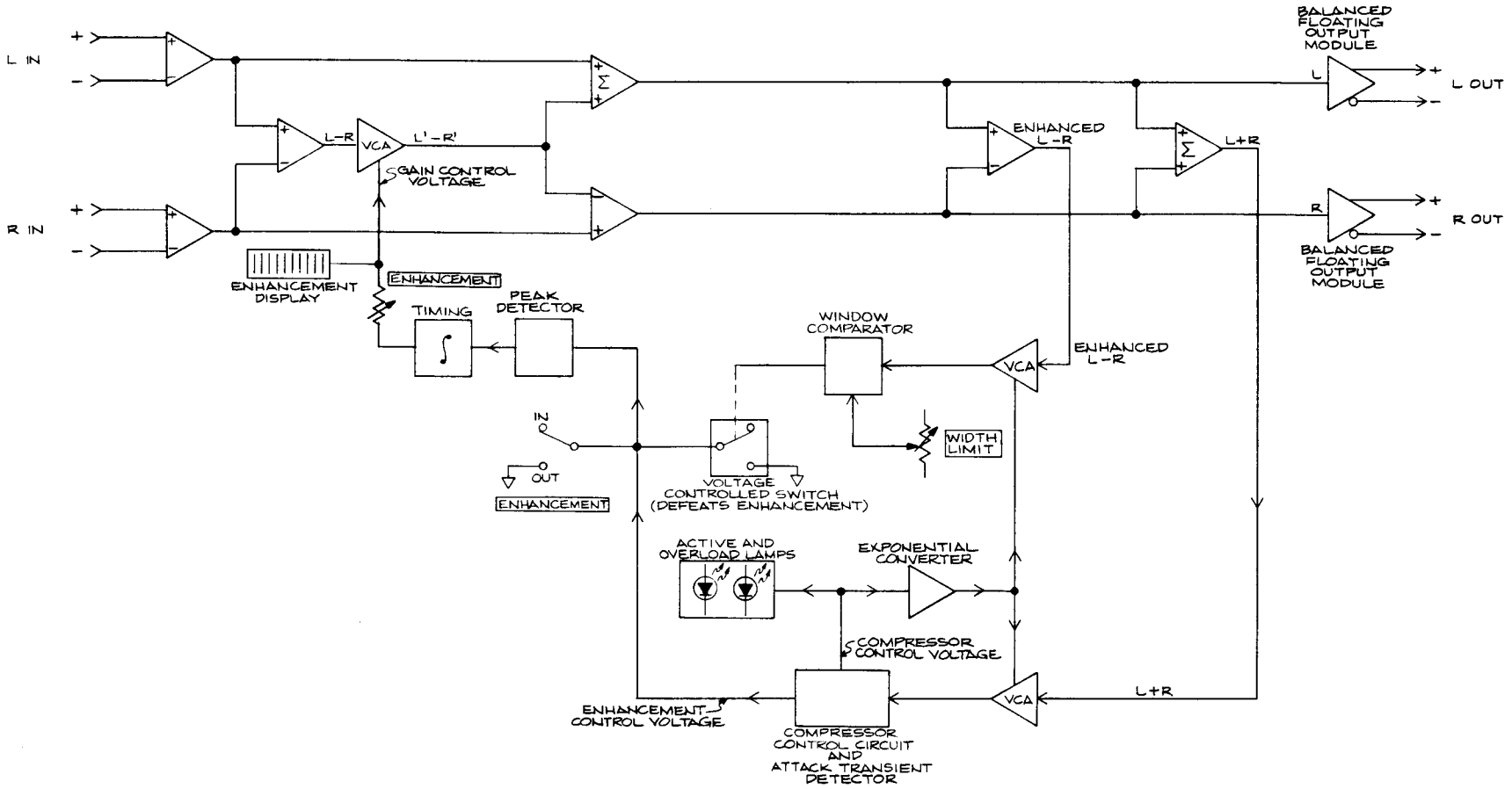

orban®

TITLE:
BLOCK DIAGRAM
Model 222A
60174-000-01

Test points TP13 through TP18 were not included in some early units (below serial number 1323000). If your unit does not have these test points,

For test point:	Substitute:
TP13	The free end of a 40.2KΩ resistor connected to pin 3 of IC9b
TP14	The free end of a 10KΩ resistor connected to pin 3 of IC11a
TP15	The end of R41 nearest to front panel
TP16	Pin 3 of IC3a
TP17	The end of R40 nearest to front panel
TP18	Pin 1 of IC13a

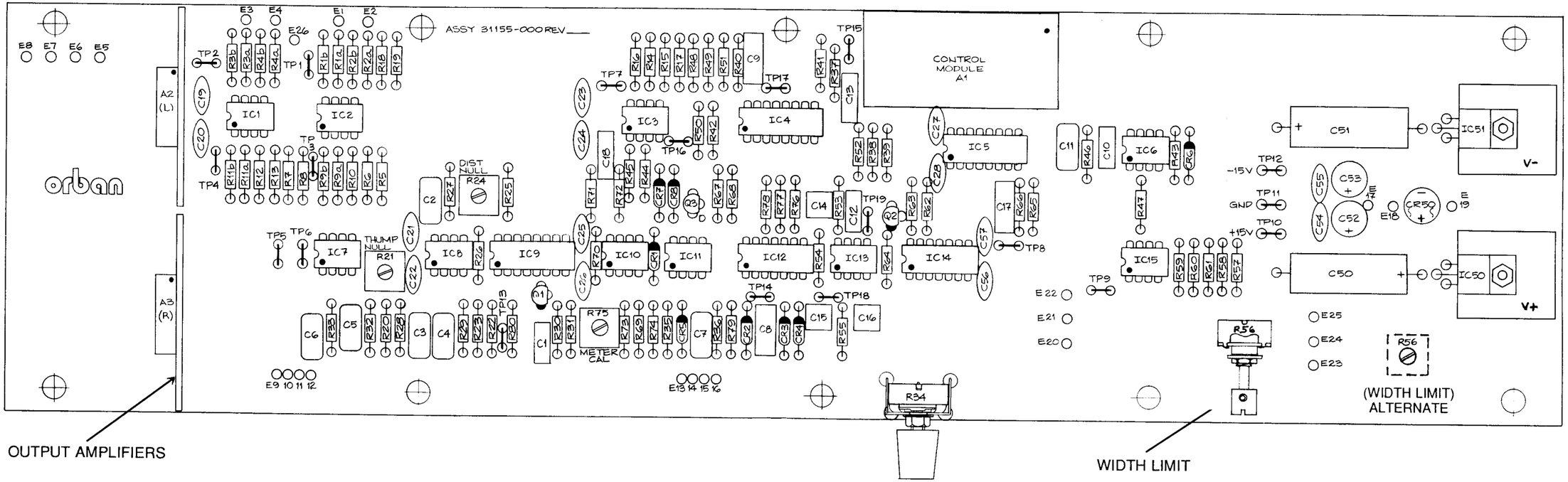

The WIDTH LIMIT control is an internal trim on some units.

ENHANCEMENT

2. TICK MARKS INDICATE PIN #1 OF IC'S, CATHODE OF DIODES, POSITIVE SIDE OF CAPACITORS, EMITTERS OF TRANSISTORS, AND PIN #1 OF MODULES.
1. REFERENCE SCHEMATIC P/N 61029-000

NOTES: (UNLESS OTHERWISE SPECIFIED)

orban®

TITLE:
ASSEMBLY DRAWING
MAIN BOARD
31155-000-02

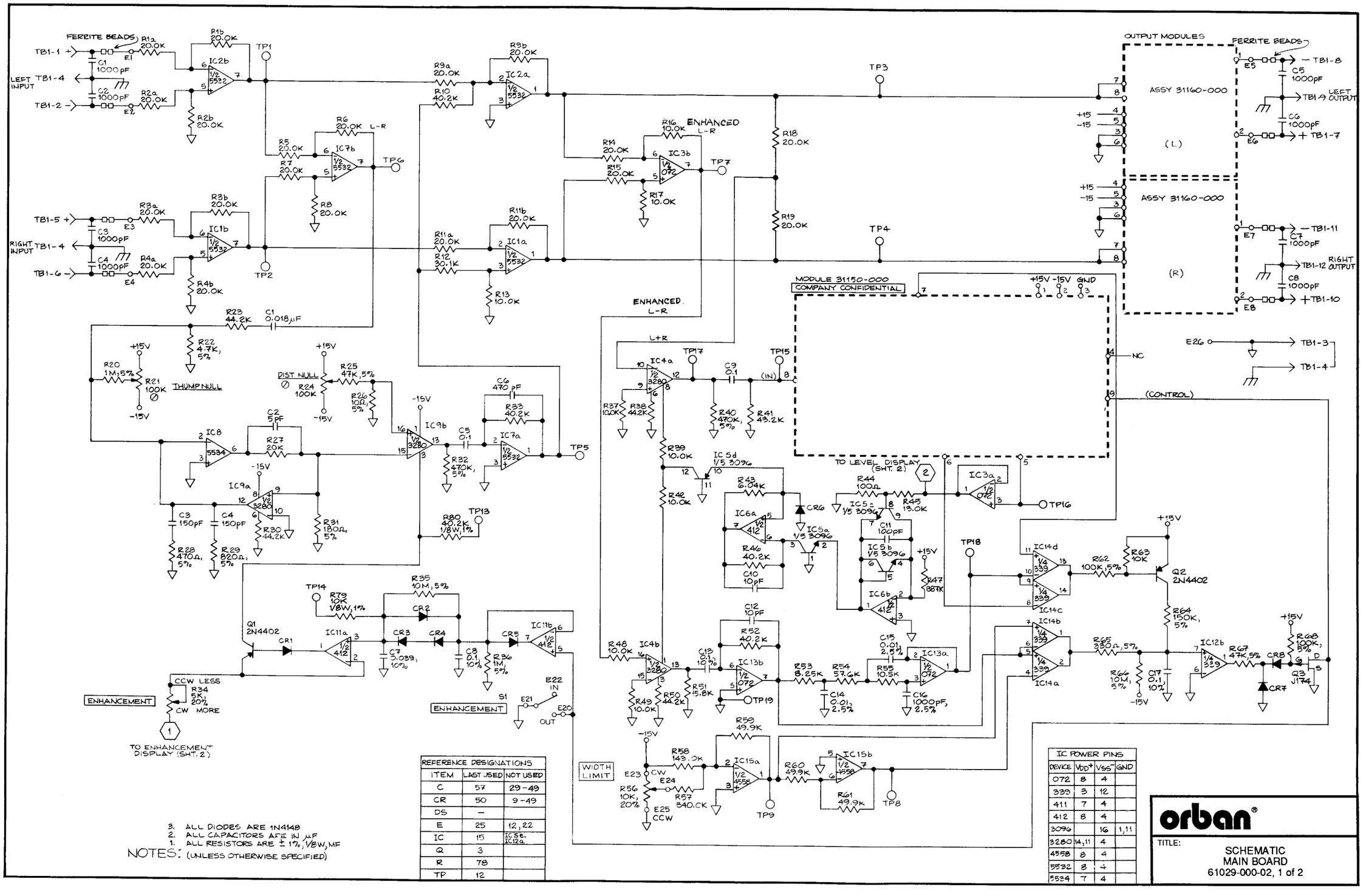

REFERENCE DESIGNATIONS		
ITEM	LAST USED	NOT USED
C	57	29-49
CR	50	9-49
DS	–	
E	25	12, 22
IC	15	IC5e, IC12a
Q	3	
R	78	
TP	12	

IC POWER PINS			
DEVICE	V_{DD}+	V_{SS}	GND
072	8	4	
339	3	12	
411	7	4	
412	8	4	
3096		16	1,11
3280	14,11	4	
4558	8	4	
5532	8	4	
5534	7	4	

NOTES: (UNLESS OTHERWISE SPECIFIED)
1. ALL RESISTORS ARE ± 1%, 1/8W, MF
2. ALL CAPACITORS ARE IN µF
3. ALL DIODES ARE 1N4148

orban®

TITLE:
SCHEMATIC
MAIN BOARD
61029-000-02, 1 of 2

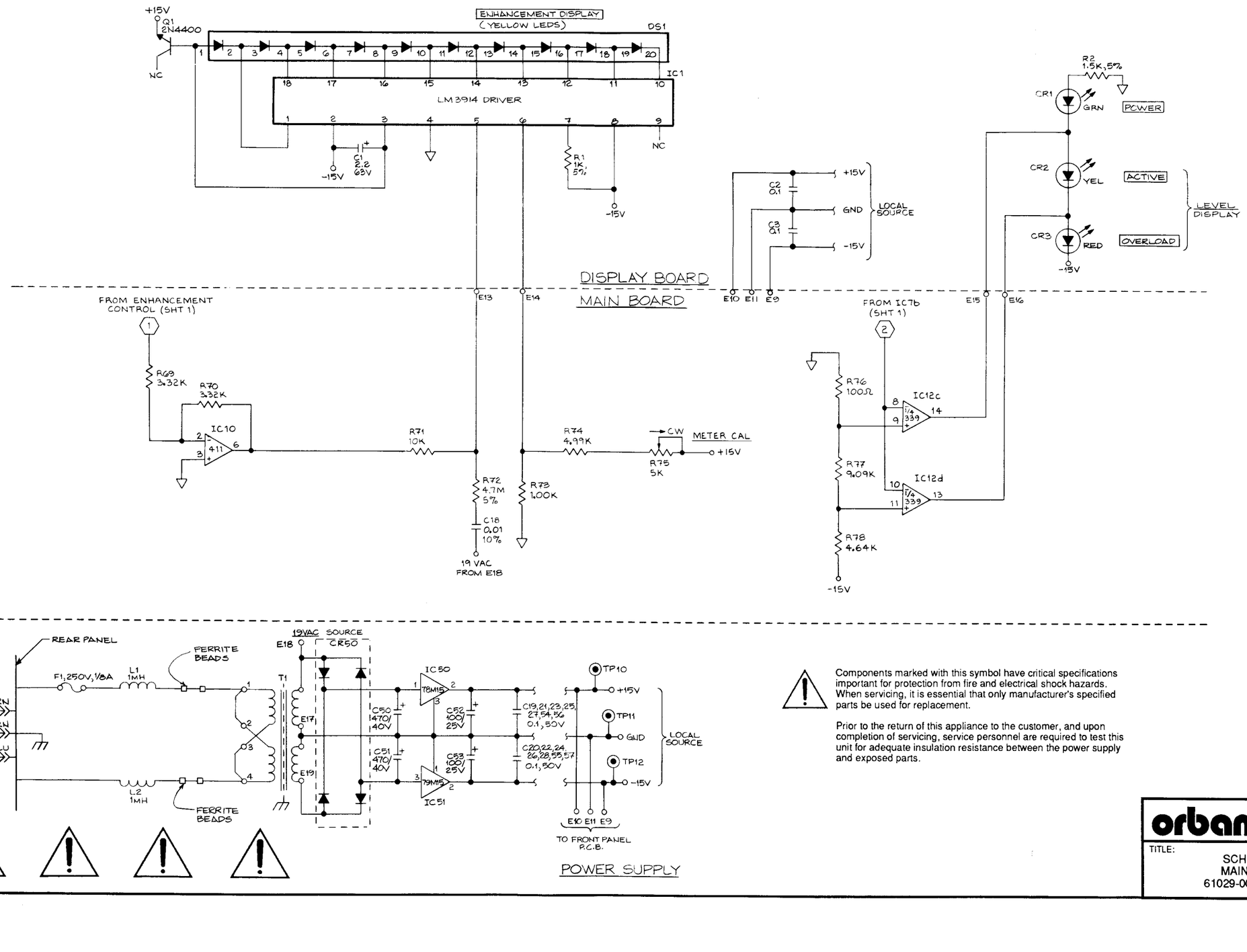

Components marked with this symbol have critical specifications important for protection from fire and electrical shock hazards. When servicing, it is essential that only manufacturer's specified parts be used for replacement.

Prior to the return of this appliance to the customer, and upon completion of servicing, service personnel are required to test this unit for adequate insulation resistance between the power supply and exposed parts.

orban®

TITLE:
SCHEMATIC
MAIN BOARD
61029-000-02, 2 of 2

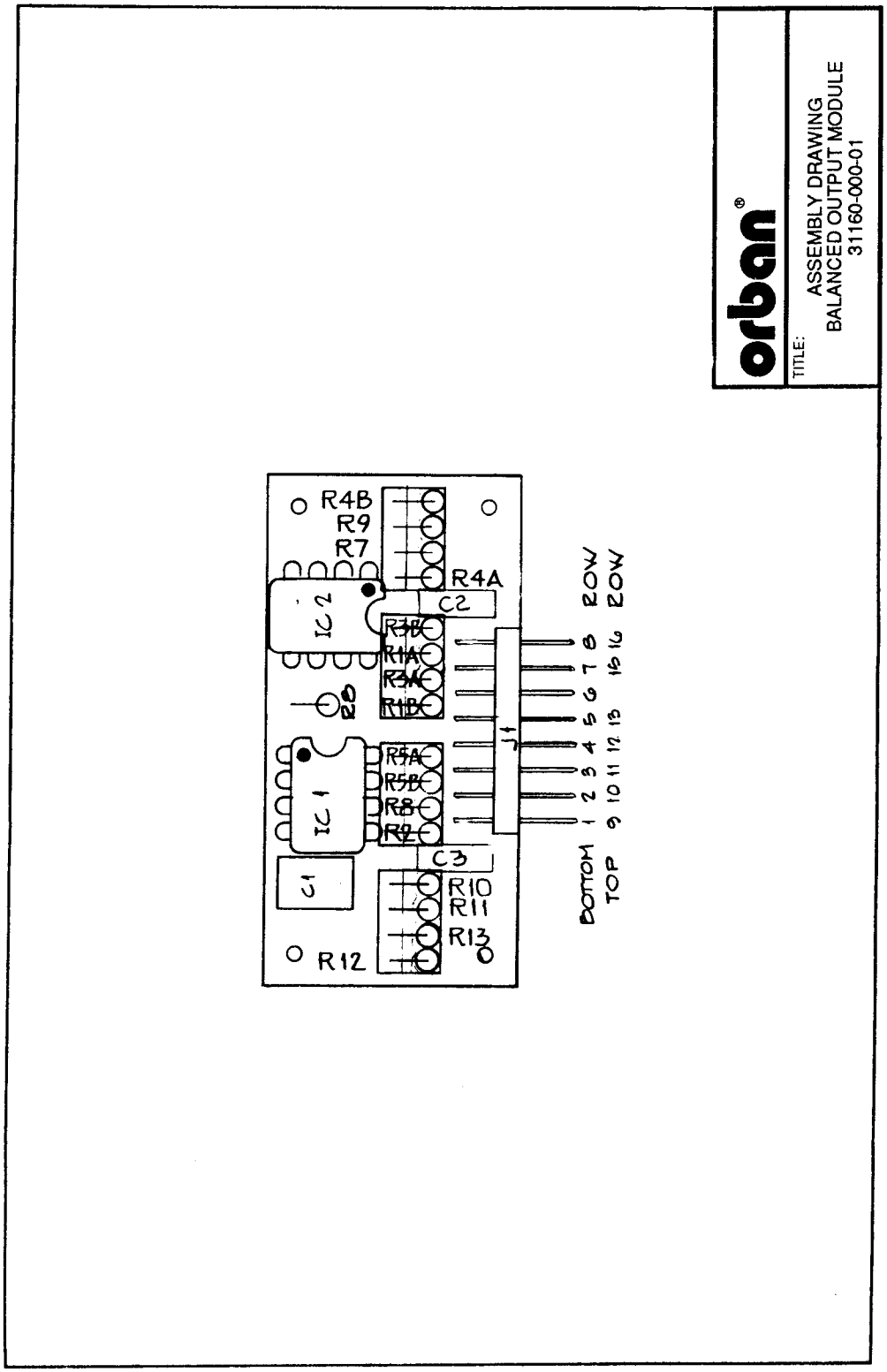
orban
TITLE:
ASSEMBLY DRAWING
BALANCED OUTPUT MODULE
31160-000-01
R4B
R9
R7
R4A
C2
IC 2
R3B
R1A
R3A
R1B
J1
R5A
R5B
R8
R2
IC 1
C3
C1
R10
R11
R13
R12
BOTTOM 1 2 3 4 5 6 7 8 ROW
TOP 9 10 11 12 13 14 15 16 ROW

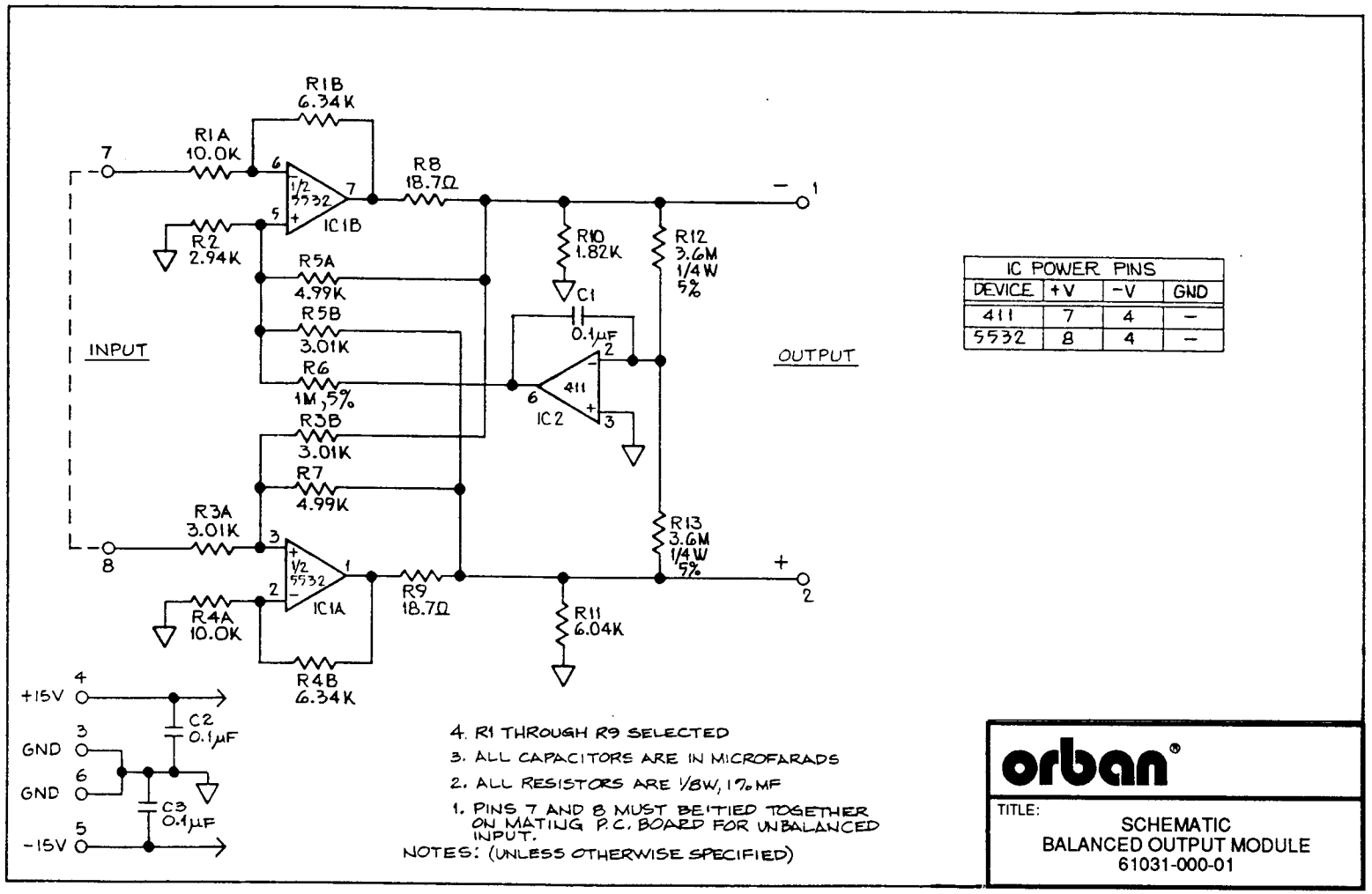

IC POWER PINS			
DEVICE	+V	-V	GND
411	7	4	–
5532	8	4	–

4. R1 THROUGH R9 SELECTED
3. ALL CAPACITORS ARE IN MICROFARADS
2. ALL RESISTORS ARE 1/8W, 1% MF
1. PINS 7 AND 8 MUST BE TIED TOGETHER ON MATING P.C. BOARD FOR UNBALANCED INPUT.

NOTES: (UNLESS OTHERWISE SPECIFIED)

orban®

TITLE:
SCHEMATIC
BALANCED OUTPUT MODULE
61031-000-01

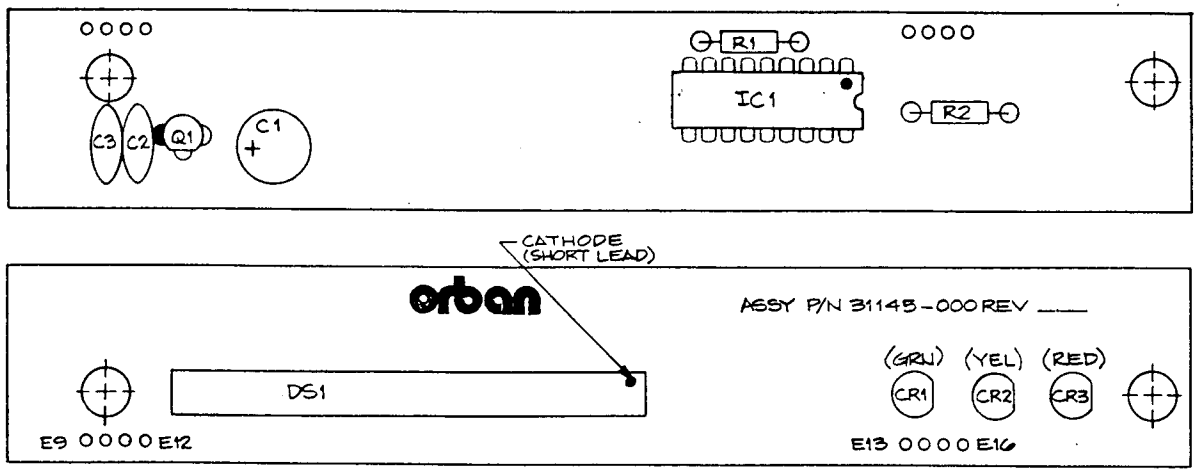

1. TIC MARKS INDICATE PIN #1 OF IC'S, CATHODE OF DIODES, POSITIVE SIDE OF CAPACITORS, AND EMITTER OF TRANSISTORS.

NOTES: (UNLESS OTHERWISE SPECIFIED)

orban®

TITLE: ASSEMBLY DRAWING
DISPLAY BOARD
31145-000-01

Abbreviations

Some of the abbreviations used in this manual may not be familiar to all readers:

AGC	automatic gain control
dBu	0dBu = 0.775V RMS. For this application, the dBm into 600Ω scale on voltmeters can be read as if it were calibrated in dBu.
EMI	electromagnetic interference
FET	field effect transistor
G/R	gain reduction
HF	high-frequency
IC	integrated circuit
IM	intermodulation (or "intermodulation distortion")
JFET	junction field effect transistor
LED	light-emitting diode
LF	low-frequency
N&D	noise and distortion
RF	radio frequency
RFI	radio-frequency interference
RMS	root-mean-square
THD	total harmonic distortion
VCA	voltage-controlled amplifier
VHF	very high frequency
XLR	a common style of 3-conductor audio connector

Notes:

Warranty

United States Warranty

Limited Warranty

Valid only in the United States. We warrant Orban products against defects in material or workmanship for a period of one year from the date of original purchase for use, and agree to repair or, at our option, replace any defective item without charge for either parts or labor.

Important: This warranty does not cover damage resulting from accident, misuse or abuse, lack of reasonable care, the affixing of any attachment not provided with the product, loss of parts, or connecting the product to any but the specified receptacles. This warranty is void unless service or repairs are performed by an authorized service center. No responsibility is assumed for any special, incidental or consequential damages. However, the limitation of any right or remedy shall not be effective where such is prohibited or restricted by law.

Simply take or ship your Orban product prepaid to our service department. Be sure to include your sales slip as proof of purchase date. (We will not repair transit damage under the no-charge terms of this warranty). Orban will pay return shipping.

Note: No other warranty, written or oral is authorized for Orban products.

This warranty gives you specific legal rights, and you may also have other rights which vary from state to state. Some states do not allow the exclusion of limitations of incidental or consequential damages or limitations on how long an implied warranty lasts, so the above exclusion and limitations may not apply to you.

International Warranty

Bedingungen

Orban gewährt 1 Jahr Garantie ab Verkaufsdatum auf nachweisbare Material- und Fabrikationsfehler. Der Garantieanspruch erlischt bei unsachgemäßer Handhabung, elecktrischer oder mechanischer Beschhädigung durch mißbräuchliche Anwendung sowie bei unsachgemäßer Reparatur durch nichtautorisierte Werkstätten. Voraussetzung für die Garantieleistung ist die Vorlage der ordnungsgemäß durch den Fachhändler ausgefüllten Garantiekarte sowie der Kaufrechnung. Transport- und Portospesen, welche aus der Einsendung des Gerätes zur Garantiereparatur erwachsen, können von Orban nicht übernommen werden, das Risiko der Zusendung trägt der Kunde. Die Garantie wird ausschließblich für den ursprünglichen Käufer geleistet.

Warranty Conditions

Orban warrants Orban products against evident defects in material and workmanship for a period of one year from the date of original purchase for use. This warranty does not cover damage resulting from misuse or abuse, or lack of reasonable care, and inadequate repairs performed by unauthorized service centers. Performance of repairs or replacements under this warranty is subject to submission of this Warranty/Registration Card, completed and signed by the dealer on the day of purchase, and the sales slip. Shipment of the defective item for repair under this warranty will be at the customer's own risk and expense. This warranty is valid for the original purchaser only.

Conditions de garantie

Pour toute mise en œvre de garantie ou de service après-vente, vous devez vous adresser à votre revendeur. Notre société assure au revendeur le remplacement gratuit des pièces détachées nécessaires à la réparation pendant un an, à partir de la date de votre facture, sauf en cas de non respect des prescritions d'utilsation ou lorsqu' une cause étrangère à l'appareil est responsable de la défaillance. Les dispositions stipulées ci-dessus ne sont pas exclusives du bénéfice au profit de l'acheteur de la garantie légale pour défaut et vice cachés qui s'applique, en tout état de cause, dans les conditions des articles 1641 et suivants du Code Civil.

Condizioni di garanzia

L'Orban presta garanzia per un anne dalla data della vendita per difetti di materiale e fabbriccazione che possono essere provati. Il diritto di garanzia cessa in caso di manipolazione impropria, danneggiamento electtrico o meccanico attraverso i'uso non approriato e riparazione inesperta eseguita da officine non autorizzate. E' indispensabile, per la prestazione della garanzia, presentare la carta di garanzia debitamente riempita dal rivenditore autorizzato e la fattura di vendita. Spese di trasporto che risultano dall'invio dell'impianto per la riparazione in garanzia, non possono essere assunte dall'Orban i'invio è a rischio e pericolo del cliente. La garanzia verrà data solo al primo acquirente.

Condiciones de garantia

Orban concede 1 añe de garantia por defectos comprobables de material o de fabricación a partir de la fecha de venta. El derecho de garantia caduca en caso de procederse a uno manipulación inadecuada en caso de producirse daño electrico o mecánico por uso indebido, así como también en caso de reparaciones inadecuados por parte de talleres no autorizados. La prestación de la garantia está sujeta a la presentación de la Tarjeta de Garantia rellenada correctamente por el vendedor autorizado, y de la factura de compra. Orban no assume ningún gasto de transporte o correo incurrido por el envio del aparato defectuoso para la reparación bajo garantia; el riesgo del envio ha de ser asumido por el cliente. La garantia se concede única y exclusivamente al comprador original.

Printed on recycled paper.