faital PRO PROFESSIONAL LOUDSPEAKERS

18HP1010

18" - 1000 W - 98 dB - 8 Ohm



NOMINAL SPECIFICATIONS

Nominal Diameter	460 mm (18 in)
Overall Diameter	460 mm (18.11 in)
Bolt Circle Diameter	440 mm (17.32 in)
Baffle Cutout Diameter	421 mm (16.57 in)
Depth	203.5 mm (8.01 in)
Flange and Gasket Thickness	13.7 mm (0.54 in)
Net Weight	**10.1 Kg (22.3 lb)**
Shipping Box (Single Carton Box)	503 x 500 x 258 mm (19.8 x 19.7 x 10.2 in)
Shipping Weight	11.5 Kg (25.4 lb)

PART NUMBER

Push Terminals - 8 Ohm Version	04604071

NOTES:

(1) 2 Hours Test According to AES 2-1984 Rev. 2003

(2) Maximum power is defined as 3dB greater than nominal power.

(3) Treated Polycotton

(4) Xmax= [(winding depth - magnetic gap depth)/2] + (magnetic gap depth/3)

(5) Maximum excursion before permanent damage

TECHNICAL PARAMETERS

Nominal Impedance	8 Ohm
Minimum Impedance	6.9 Ohm
AES Power Handling **(1)**	1000 W
Maximum Power Handling (2)	**2000 W**
Sensitivity (1W/1m)	**98 dB**
Frequency Range	35÷2000 Hz
Voice Coil Diameter	**100 mm (4 in)**
Winding Material	Cu
Former Material	Glass Fiber
Winding Depth	23 mm (0.91 in)
Magnetic Gap Depth	**10.5 mm (0.41 in)**
Flux Density	1.05 T
Magnet	Ferrite Ring
Basket Material	Aluminum
Demodulation	No
Cone Surround **(3)**	Triple Roll
NET Air Volume filled by Loudspeaker	7.1 dm^3 (0.251 ft^3)
Spider Profile	2x non-adjacent symmetrical constant height waves

THIELE & SMALL PARAMETERS

Fs	35 Hz
Re	5.3 Ohm
Qes	0.42
Qms	7.8
Qts	0.40
Vas	240.1 dm^3 (8.48 ft^3)
Sd	1207 cm^2 (187.09 in^2)
Xmax **(4)**	9.75 mm
Xdamage **(5)**	21.9 mm
Mms	175.2 g
Bl	22 N/A
Le	1.8 mH
Mmd	127.8 g
Cms	0.12 mm/N
Rms	4.94 Kg/s
Eta Zero	2.37 %
EBP	83 Hz

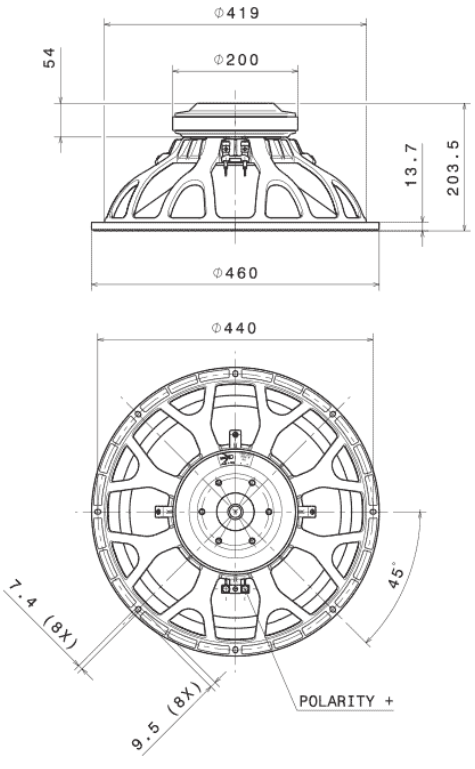

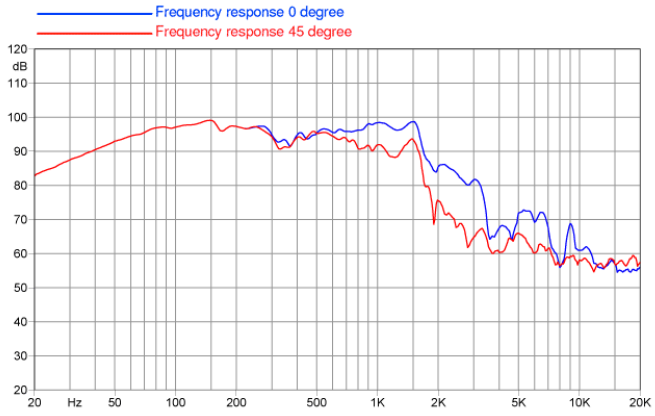

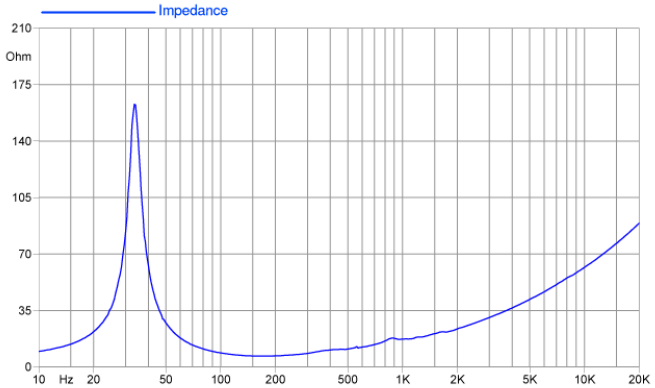

©Copyright 2020 **Faital S.p.A.** • All rights reserved.