111B Dual Spring Reverb
OPERATING MANUAL

orban

111B Dual Spring Reverb
OPERATING MANUAL

orban

Orban Associates Inc. 645 Bryant St., San Francisco, CA 94107
(415) 957-1067 Telex: 17-1480

95011-000-10 1/86

© ORBAN ASSOCIATES INC.

Table of Contents

Introduction	1
Installation -- Mechanical	1
Installation -- Electrical	2
Input/Output/Grounding	2
Power	3
Performance Evaluation	4
Operating Instructions	5
Use with a Console	6
Fixed/Floating Switch	6
Equalizer	6
Uses Not Involving Consoles	7
Stereophonic Considerations	7
Maintenance	8
Circuit Description	9
Limiter and Driver Circuit	9
Pickup Amplifier Circuit	9
Power Supply	11
Spring Assembly	11
Factory Service	12
Shipping Instructions	12
Appendix A: Alignment Procedure	13
Appendix B: Specifications	14
Parts List	17
Assembly Drawing	21
Schematic Drawing	23

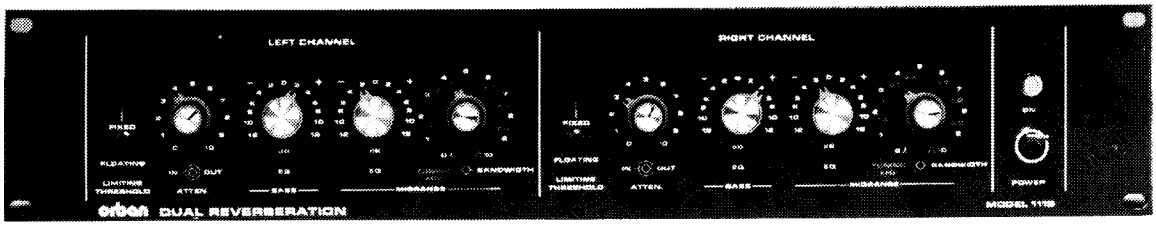

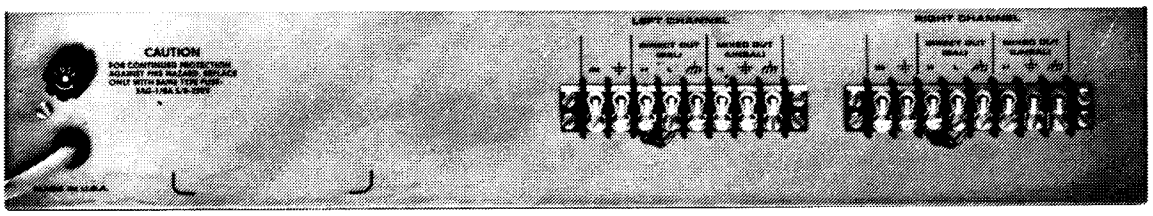

REGISTRATION CARD

The original purchaser should have received a postpaid Registration Card packed with this manual.

Registration is of benefit to you because it enables us to tell you of new applications, possible performance improvements, service aids, etc., which may be developed over the life of the product. It also provides us with the date of sale so that we may more promptly respond to possible claims under Warranty in the future (without having to request a copy of your Bill of Sale or other proof of purchase).

Please fill in the Registration Card and return it to us.

If the Registration Card has become lost or you have purchased the unit used, please photocopy the image of the card reproduced below and send it to us in an envelope. Use the address shown on the title page.

Model # _____ Serial # _____

Name or Title _____

Organization _____

Street _____

City/State/Country _____

Zip or Mail Code _____

Purchased from _____ City _____ Date of Purchase _____

Nature of your application _____

How did you hear about it? _____

Comments: _____

_____

Fig. 1: REGISTRATION CARD

WARRANTY

The Warranty, which applies only to the first end-user of record, is stated on the Warranty Certificate on a separate sheet packed with this manual. Save it for future reference.

INTRODUCTION

Your new 111B/1 Dual Reverberation is a fourth generation design, incorporating many new refinements while retaining the distinctive sound quality which made the earlier Orban Reverberation units so successful.

The 111B/1 Reverberation contains a number of sophisticated features which contribute greatly to its high performance. As many of these features are not intuitively obvious, this manual should be read and understood in order to obtain the maximum benefit.

INSTALLATION: MECHANICAL

When your 111B/1 is received, it should be immediately unpacked and inspected for shipping damage. The 111B/1 was in perfect condition when it left the factory. If damage is noted, the carrier should be promptly notified, and a claim should be filed.

The 111B/1 mounts in a standard 19" (48.3 cm) rack, and requires a 3.5" (8.9 cm) of rack space. The spring delay lines are located inside the chassis towards the rear. These delay lines are somewhat sensitive to both mechanical vibration and magnetic fields. They have been suspended on springs to isolate them from as much vibration as possible, and mu-metal hum shields have been fitted around the pickup coils. Therefore, the final location for the 111B/1 should not be chosen until tests have been made to assure that such a location is sufficiently quiet mechanically and electrically. Mounting the unit close to loud monitor speakers (which can induce leakage and/or feedback), and/or in close proximity to other electronic devices with large unshielded power transformers is not recommended. In unusual situations, it may be desirable to set the chassis on foam or rubber, rather than mounting it rigidly in a rack.

The steel chassis provides substantial hum shielding by itself. THE 111B/1 SHOULD ALWAYS BE OPERATED WITH BOTH TOP AND BOTTOM COVERS IN PLACE.

The excursion of the springs has been limited so that it is unnecessary to secure them mechanically when the unit is transported. However, as a matter of good practice, the unit should be well-packed and not subjected to severe vibration. Occasionally, after a shock in transit, the springs have been observed to fall off the hooks which connect them to the driver and/or pickup transducers. Generally, no permanent damage is done, and the springs may merely be reconnected to the hooks.

The 111B/1 chassis must be grounded during operation in order to avoid hum pickup. The circuit and chassis grounds have been kept separate in order to permit a grounding arrangement which avoids ground loops in all situations. In a rack mount, the chassis will pick up its ground from the rack. In this case, it may be necessary to scrape the paint from the rack and/or the rear of the panel in order to effect an adequate ground. An ohmmeter should be used to ascertain that the chassis is indeed well grounded after it has been mounted.

Where the 111B/1 is mounted elsewhere than a rack, the circuit and chassis grounds may be jumpered together on the rear-panel barrier strip by connecting TB1-7 to TB1- 8.

Ambient temperature should not exceed 113°F (45°C) when the electronics are powerered.

Audio inputs and outputs are found on a Cinch-Jones 140-type barrier strip (#5 screw) on the rear of the chassis. Ordinarily, crimp-on spade lugs are used to terminate audio cables connected to this barrier strip. If quick removal of the cables is desired, a fanning strip may be employed.

A three-wire grounding line cord is installed on the 111B/1 and is terminated with a U.S. standard "U-ground" plug. Users in other countries may require an adapter or replacement plug. Units modified to 230 volt 50 Hertz operation are shipped with the U.S. standard plug. A tag on the line cord warns of the modification. See Fig. 1 for connection details.

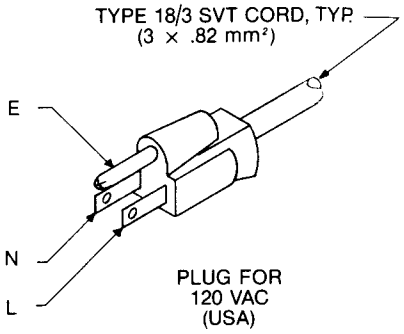

CONDUCTOR		WIRE COLOR	
		Normal	Alt
L	LINE	BROWN	BLACK
N	NEUTRAL	BLUE	WHITE
E	EARTH GND	GREEN-YELLOW	GREEN

AC MAINS LINE CORD DETAIL

Fig. 1: Power Cord Diagram

INSTALLATION: ELECTRICAL

Input:

The audio inputs of the 111B/1 are unbalanced bridging with an input impedance of 10,000 ohms. Because of the front panel input attenuator, any nominal level from -30 to +4 dBm may be accomodated. The impedance of the source is not critical.

Output:

The main output of each channel of the 111B/1 carries the reverberated signal only, and is designed to be used with mixing consoles having an echo send bus and having inputs available for echo return. Nominal output level of the main output is 0 dBm; clipping level is approximately +20 dBm.

This output will drive either balanced or unbalanced mixer inputs. In all cases, simply connect the 111B/1's "H" (for "high") terminal to the "high" terminal of the mixer input, and connect the 111B/1's "L" (for "low") terminal to the "low" or "ground" terminal of the mixer input. In addition, there must be a continuous ground between the chassis of the 111B/1 and all associated equipment (see Grounding below).

Because the 111B/1 main output is transformer-coupled, it must be loaded by 600 ohms to achieve correct frequency response. Most modern mixers have high-impedance "bridging" inputs with 10K or greater impedance. When the 111B/1 is used with such bridging inputs, the direct output should be loaded by means of a 620 ohm, 1/2 watt, 5% resistor connected between "H" and "L". Two such resistors are provided for your convenience.

The 111B/1 also has one "mixed" auxiliary output per channel for use where mixer echo send/return facilities are unavailable. The output contains a mix of the 111B/1 input (at constant level) and the reverberated sound (at a level controlled by the 111B/1's "OUTPUT ATTEN"). This mixed output is unbalanced, and can drive either balanced or unbalanced mixer inputs. Connect the 111B/1's "H" terminal to the "high" terminal of the mixer input; connect the 111B/1's "⏚" terminal to the "low" or "ground" terminal of the mixer input.

The 111B/1 mixed output must not be loaded by an impedance lower than 2K. However, its source impedance is low, and it can drive up to 100 feet of shielded cable.

Grounding:

When the main (balanced) output drives an unbalanced line, one side of the output line should be grounded at the input to the external equipment. A continuous shield (or system) ground is necessary between the two pieces of equipment.

If the auxiliary output is used, extreme care should be used to avoid creating ground loops, as there is no output transformer to break such loops. A ground loop is formed when a given piece of equipment receives its signal ground by two or more separate paths simultaneously. To cure ground loops, make sure that only one signal ground path exists between the 111B/1 and external equipment.

The power-cord ground (green/yellow wire) is connected directly to the chassis. If the chassis is mounted in a grounded enclosure, or if the 111B/1 is connected to a grounded AC outlet, then the chassis should pick up its ground in this way. Only if the AC source is not grounded and the chassis is not mounted in a grounded enclosure should the chassis be grounded to the signal ground, by jumpering terminals 7 and 8 on either rear-panel terminal strip.

In certain very difficult installations (such as a radio transmitter site), it may be necessary to incorporate an input transformer in order to avoid hum due to RF pickup. If the auxiliary output is employed, an output transformer may sometimes be useful there as well. The main output, being transformer-coupled, effectively breaks ground loops and improves RFI immunity.

Further information on system grounding techniques is beyond the scope of this manual, and the reader is referred to The Audio Cyclopedia by H. M. Tremaine (Howard W. Sams & Co., Inc., Indianapolis; New York), section 24.

Power:

The power transformer can be wired for 105-125 volt or 210-250 volt AC operation, 50-60 Hz. The nominal voltage for which the unit is wired is 115 volts unless otherwise marked on the shipping carton and on a tag affixed to the line cord.

To change the line voltage, remove the top cover. The primary power transformer terminals are revealed by lifting the insulating cover. Strapping instructions are printed on the insulating cover. When altering the position of the jumpers, take great care not to overheat or bend terminals. Do not rearrange the insulated wiring. The wiring for 115 VAC is indicated on the schematic, and the 230 VAC wiring can be easily deduced.

PERFORMANCE EVALUATION

The average user is not likely to have the equipment necessary to thoroughly evaluate the electrical performance of the 111B/1. However, the ear will usually do an adequate job in detecting faults that may develop -- particularly mechanical faults in the delay line that are virtually impossible to detect with conventional instrumentation.

In new installations, the most common problems are hum and acoustic feedback. An ideally installed unit will have, under no-signal conditions, an output noise consisting of hiss, a small amount of low-frequency rumble, and a slight amount of hum which is substantially below the hiss level and which is almost undetectable. If substantial amounts of hum are observed, the grounding scheme should be carefully checked referring to the Electrical Installation section of this manual as a guide. Hum can also be caused by magnetic fields from large transformers and the like. If this is the case, the 111B/1 must be moved to a different location. Buzz is almost always caused by some form of RF interference, which may come from TV transmitters, SCR dimmers, and fluorescent lights. A properly grounded 111B/1 should be reasonably immune to these effects.

Because of hum and low-frequency microphonics (to which the ear is relatively insensitive), it is not meaningful to measure the noise in the 111B/1 using a flat response meter. At the factory, we use a bandpass filter rolling off at 18 dB/octave below 400 Hertz and above 20 kHz. Under these conditions, with the equalizers FLAT, noise at the main output is typically
-64 dBm.

To measure harmonic distortion, use a bandpass filter (like the one described above) before (or in) the distortion meter. Choose a frequency between 1 and 2 kHz which provides a response peak. Increase the input level until the FIXED lamp just lights, and then back off 2 dB. With the equalizers flat, the total harmonic distortion should typically be 0.2%.

The frequency response consists of a number of closely spaced peaks and dips ("comb filter"). Ordinarily the ear must be used to determine if the response is normal. If a pink noise source and third-octave analyzer are available, the response can be measured. It should be similar to the graph given in Appendix B (Specifications).

The limiter section may be evaluated with a sinewave oscillator, an AC VTVM/Distortion Analyzer, and an oscilloscope. To quickly verify proper operation of the limiter circuit, turn the INPUT LEVEL control full clockwise, place the "FIXED/FLOATING" switch in the FLOATING position, and observe the waveform at TP-1 with a -50 dBm, 1 kHz input to the 111B/1 channel under test. Suddenly switch the input level to -40 dBm. The level observed on the scope should not change instantaneously, but should have a risetime of 100-200 ms. This test verifies that the floating threshold circuitry is operating properly.

Now increase the level to -20 dBm. The front panel FIXED lamp should light, and the level at TP-1 should rise no more than 1 dB for a further 10 dB input level increase.

With a 5 kHz/-20 dBm input, the THD measured at TP-1 should not exceed 0.3%.

If the unit deviates appreciably from these guidelines, a circuit failure is indicated. Unless someone has readjusted the internal trimmers, it is extremely unlikely that any such problem may be cured by simple realignment, as the adjustments are stable with time. NEVER READJUST THE TRIMMERS CASUALLY. Alignment should be performed ONLY according to the step-by-step instructions in Appendix A.

OPERATING INSTRUCTIONS
(And an explanation of artifical reverberation)

In an indoor acoustical environment, the sound you hear can be considered to consist of three components:

(1) the direct sound, which is the sound that reaches your ears directly from the sound source, without being bounced off any reflecting surfaces;
(2) the early reflections, which are the first few echoes perceived by the ear, and whose time delay after the ear hears the direct sound is responsible for the sense of the size of the room; and
(3) the reverberant field, which consists of all the later echoes as they bounce from wall to wall, getting weaker and weaker as they do so. The length of time that it takes the reverberant field to decay 60 dB is commonly known as the reverberation time of the room. The reverberation time will vary as a function of frequency, and in real rooms it ordinarily gets faster as the frequency is increased.

In studio recording, sounds are often recorded as "dead" as possible in order to assure maximum separation between different instruments being picked up by different microphones. By "dead", we mean that pickup of all reflected sound is minimized. However, such recordings sound unpleasantly dry by themselves, and it is esthetically desirable to simulate features of natural reverberation, which include early reflections and the reverberant field, by means of artificial reverberation devices like the 111B/1.

The function of the 111B/1 is to provide the early reflections and the reverberant field only. The direct sound is provided by the original recording. In order to accomplish this, the reverberation element (six springs with associated driving and pickup transducers) is driven by the direct sound. The direct sound is fed to the driving transducer and causes a torsional vibration in each of the springs. This vibration takes from 30 to 40 milliseconds (depending on the characteristics of each of the six springs) to pass through the spring and reach the pickup transducer, where it is translated into an electrical signal. Because the mechanical impedance of the pickup transducer is mismatched to the mechanical impedance of the spring, most of the signal is reflected from the pickup back along the spring to the driver side, again to be reflected back to the pickup side. Each time a reflection takes place, a little bit of energy is absorbed, thus causing a slow decay in the amplitude of the sound, simulating natural reverberation. The early reflection is simulated by the initial 30 to 40 millisecond time delay mentioned above. Thus, when the output of the pickup transducer is mixed with the direct sound (from the original recording), all the essential features of a natural acoustic space are simulated.

The spring reverberation technique is very cost-effective. However, it has a number of drawbacks whose effects must be minimized if maximum performance is to be obtained.

The principal problem is a coloration, sometimes called "spring twang". This is a peculiar "boing" or "twang" sound that the spring makes when driven by sharp transients, like drum beats, finger snapping, nylon-stringed acoustic guitar, etc. The 111B/1 contains a "floating threshold limiter" which recognizes such transients, and automatically ducks down their level when compared to steady-state sounds which may surround the transients. The "twang" sounds are thus greatly suppressed, and are usually entirely masked by the direct sound which is mixed into the 111B/1 output.

"Flutter" is a decay which varies rapidly in volume, rather than decaying smoothly and exponentially down to zero level. This is a function of the number of reflections per second produced by the reverberation device. Although the 111B/1 does not produce enough reflections per second to totally eliminate audible flutter, the use of six springs per channel reduces flutter to an esthetically acceptable level for most applications.

A decay which varies unnaturally as a function of frequency can be a problem. In the 111B/1, this has been dealt with by introducing a dip in the frequency response centered at 300 Hz, where this phenomenon is most troublesome. The excessively long decay in the 300 Hz region is thus de-emphasized to the point where it does not call audible attention to itself.

Hum and microphonics have already been mentioned (in Mechanical Installation, above).

With the above discussion in mind, we can now turn to actual operating instructions. If the limitations (and our solutions) are understood, the 111B/1 can be used to its best advantage.

Use with a Console:

The 111B/1 will often be used with a mixing console having an "echo send" and "echo return" system. This means that a separate mixing bus exists specifically to feed a reverberation device. A reverb mixing control is provided for each console input, and the inputs may be mixed onto the echo send bus according to the amount of reverberation to be added to an individual input.

After the mixed inputs have been reverberated by the 111B/1, the 111B/1 main output is introduced to the echo return input of the console, so that the reverberated sound from the 111B/1 can be mixed with the direct sound.

The echo send controls should be set to a normal part of their range. After this is done, the 111B/1 FIXED/FLOATING switch should be placed in FLOATING, and the 111B/1 INPUT ATTENUATOR should be adjusted until the FIXED light-emitting diode (LED) on the 111B/1 just flickers on peaks. This is the ideal drive level to assure an optimum combination of low noise and protection from the effects of "spring twang". The 111B/1 OUTPUT LEVEL control is ordinarily adjusted so the the console echo return fader is operated in a convenient part of its range.

Fixed/Floating Switch:

If the FIXED/FLOATING switch is placed on FIXED, the floating threshold processing is defeated, but the limiter still serves to protect the spring from distortion due to excessive input drive. In the FLOATING mode, the FIXED LED will light whenever the limiter has automatically switched to the FIXED mode in order to protect the spring from excessive drive. When the FIXED LED is illuminated, the "twang" protection is inoperative.

There are two main reasons for operating in FIXED mode. The first is where the 111B/1 output is used for special effects without being mixed with direct sound. The floating threshold processing causes the reverberated output to sound unnatural when it is heard without any direct sound mixed in. This is because the 111B/1 is ordinarily intended to provide only the early reflective and reverberant components of the sound, and sounds perfectly natural when direct sound is mixed with the 111B/1 output.

The second situation where operating in the FIXED mode is desirable is where the instrument being reverberated is essentially transient-free (like brass or strings). In this case, a louder sound (hence better signal-to-noise ratio) is achieved in FIXED mode.

Equalizer:

The 111B/1 equalizer is located after the pickup preamplifier, and will therefore affect the noise level at the 111B/1 output. Other than this consideration, the equalizer may be freely used to create any artistic effect desired.

The bass control affects frequencies below 500 Hz. A bass boost creates "warmth" and concert-hall ambience, while a bass cut creates a "crisp", "tight" sound more suited for rock.

The midrange equalizer is a peaking/dipping equalizer, and the frequency of peak/dip is continuously turnable, by means of the TUNING control, from 1.5 to 5.5 kHz. In addition, the bandwidth (the number of frequencies immediately adjacent to the peak/dip frequency which are affected by the equalizer) is continuously adjustable. Ordinarily, the BANDWIDTH control will be used with broader settings (say, beyond 2 o'clock). However, narrow settings may be used to tune out specific spring resonances (in the dip mode) if these prove troublesome on certain program material. Moderate bandwidth peaking at 5.5 kHz may be employed to emphasize sibilance, if this special sound is desired. You will find that the effect produced by the reverberation is substantially different at different settings of the midrange equalizer, and you should experiment extensively in order to familiarize yourself with the creative power which this control provides. In particular, you may find that a more natural reverb sound occurs with a certain amount of broadband treble rolloff. This is obtained by adjusting the TUNING to 5.5 kHz, and the BANDWIDTH full clockwise, and then adjusting the EQUALIZATION for the amount of dip which gives artistically pleasing results.

Uses Not Involving Consoles:

Certain applications require the use of the 111B/1 "in line", where it must add reverb to a given input signal without an external mixing console. An auxiliary "mixed" output has been provided for this purpose. The auxiliary output contains the direct signal applied to the 111B/1 input mixed with the reverberated output. The amount of the reverberated component is controlled by means of the OUTPUT ATTENUATOR control on the front panel, and is adjusted to give artistically pleasing results for a given piece of program material. The level of the direct signal is determined by the INPUT ATTEN control.

Stereophonic Considerations:

While the 111B/1 contains two separate channels, high frequency crosstalk makes it undesirable to handle separate programs with them. They may be used with stereophonically related program material in a number of ways:

a) Mono Input/Stereo Output: Both channels are fed from a single echo send bus. The LEFT CHANNEL output is fed to the left echo return input of the mixer; the RIGHT CHANNEL output is fed to the right echo return input.

b) Stereo Input/Stereo Output: Requires two echo send busses with panning facilities. Each input channel may be assigned to a given space from left to right in the echo, by use of the echo send panpots. One echo send bus is connected to the LEFT CHANNEL input; the other echo send bus is connected to the RIGHT CHANNEL input. The 111B/1 outputs are connected as in (a) above.

A useful and dramatic effect available in this configuration is "cross-echo". Here, tracks assigned to the left in the main mix are panned to the right in the echo mix, and vice-versa. Thus the reverberated sound appears spatially separated from the main sound in the final mix, and greater ambience is obtained.

c) Stereo "IN LINE": Here, the auxiliary outputs of the 111B/1 are used, with the left program line passing through the LEFT CHANNEL of the 111B/1 and the right program line passing through its RIGHT CHANNEL. This creates a substantially less dramatic effect than the configuration described in (b) above, and should be used only when stereo echo send busses are unavailable.

In general, regardless of configuration, any equalization desired should be applied equally to both channels, unless special effects are desired.

Preventive Maintenance:

The only preventive maintenance required is keeping the 111B/1 free of dust and dirt, both inside and out. If this is not done, dust buildup can interfere with normal cooling, and can also absorb moisture, causing high-resistance shorts. Strong solvents should not be used on the front panel, as they may damage the finish. 99% isopropyl alcohol usually works well.

The electronics are stable indefinitely and require no periodic realignment. Realignment may be necessary if components in the limiter/driver circuit are replaced (including the module), if the power supply regulator is replaced, or if someone casually readjusts the trimmers. Alignment instructions are included as an appendix for the user who is both skilled in the maintenance of solid-state equipment and possessed of the requisite test gear; otherwise, the unit may be returned to the factory under the procedure described in the section on Shipping Instructions.

Corrective Maintenance:

The user should refer to the "Circuit Description" immediately below for help in tracking down problems which may develop. In difficult cases, factory consultation is available, and factory service may be utilized. After the expiration of the Warranty, a reasonable charge will be made for such service.

ALWAYS PHONE OR WRITE FOR AUTHORIZATION BEFORE RETURNING A UNIT FOR FACTORY SERVICE. Many problems can be solved by mail or phone without necessity for physical return of the unit.

It is easy to compromise the reliability of a piece of electronic equipment by sloppy workmanship when replacing parts. Printed-circuit boards are particularly subject to damage from crude repair techniques. If it is necessary to replace parts on the PC board, the following technique is strongly recommended to avoid damage.

Use a 30 watt pencil-type iron to avoid overheating the board. Overheating can cause the foil to separate from the board. Heat the joint to be unsoldered. As soon as the solder is molten, vacuum it away with a desoldering tool like the Edsyn "Soldapullt" or a teflon solder syringe. The lead can usually be removed from the board easily.

Before replacing the part, be sure that the hole in the board is not filled with solder. Inserting a replacement part by heating the solder-filled hole to melt the solder and then inserting a lead will almost guarantee a foil/board separation. Instead, clear the hole with the desoldering tool before attempting to insert the replacement lead.

After the component has been replaced and carefully resoldered, use a solvent like the widely-available "Energine" Fireproof Spot Remover (gold can) to remove residual flux. Flux left on the board will eventually absorb moisture from the air and cause high-resistance short circuits. A "Q-Tip" can be used to apply the solvent. Be sure no residue is left on the board after the solvent evaporates.

It goes without saying that the standards of good component insertion should be followed: the body of the part should be flat against the PC board, and the solder joints should be shiny and smooth, with just enough solder to provide an even joint.

CIRCUIT DESCRIPTION

Limiter and Driver Circuit:

The encapsulated module contains the control circuitry for the limiters and will not be described except as it interfaces with external components, due to the proprietary nature of this circuit.

As left and right channels are identical, only the left channel will be described.

The signal enters and is attenuated by INPUT ATTENUATOR control R101. R101 is buffered by non-inverting amplifier IC101a with associated resistors R103, R105, yielding a gain of 18 dB. Following blocking capacitor C103, the signal enters the module, the auxiliary output buffer/mixer IC107b, and the voltage-controlled attenuator R107, 109, C105, R189 and Q103 which provides gain control for the limiter. C105 introduces an 82 microsecond pre-emphasis before the limiter which helps compensate for the fact that the spring driver overloads more easily at high frequencies, since it is driving constant current into an inductive load.

Following variable attenuation, the signal is amplified back up to approximately 1.0 volts rms by means of IC103 and associated components. R111, 117 determine the non-inverting gain of 34 dB; frequency compensation to prevent oscillation is provided by R113, 115, and C109, 111. C107 determines the low-frequency rolloff with a 3 dB down point of 1.9 Hz.

Feedback is introduced into the gate of Q103 through C113, R119 to cancel even-order harmonic distortion which would otherwise be produced by Q103. In addition, the output of IC103 is introduced into the module, which utilizes this signal (plus the input signal) to derive a gain-control voltage which is applied to the gate of Q103.

Q101 operates as a switch to turn D103, the "FIXED" LED, on and off as required by the module. Other components associated with the modules perform auxiliary functions to aid module operation.

The output of IC103 drives current-source IC101b, the spring driver. Current flowing through the spring driver coils develops a voltage across R125 proportional to the current through the coil. This voltage is fed back through R123, C115 to the inverting input of IC101b, thus setting the gain of the circuit and providing an 82 microsecond de-emphasis to undo the pre-emphasis provided before the limiter. Low frequency transconductance of the circuit is normally 12.3 millimhos, falling at 6 dB/octave above 1.94 kHz.

Pickup Amplifier Circuit:

The pickup amplifier employs an ultra low-noise LM381 integrated circuit preamplifier. This is not an opamp; it operates from the +15 volt supply only and its input stage is a single transistor rather than a differential pair.

Feedback to determine DC and AC characteristics is taken to the emitter (pin 3) of the input transistor. The normal quiescent DC operating point of 6.5 volts at the output is determined by R129, 131. C123 introduces a low-frequency -3 dB point of approximately 100 Hz. C119 helps compensate for spring delay line characteristics.

C125 is a DC blocking capacitor which couples the output of IC105a to equalization network R135, 137, 139, C127, 129. This network provides a 300 Hz dip and a slight high-frequency rolloff. It is loaded by OUTPUT ATTENUATOR control R143 in parallel with R141.

R143 drives a non-inverting amplifier (IC107a) with a gain of 8.5. IC107a in turn drives the equalizer section. The basic equalizer amplifier is IC109b, operating as a unity-gain inverting amplifier. Both bass and midrange networks can variably bypass R145 (producing a boost) or R171 (producing a reciprocal cut, as R171 is IC109b's feedback resistor). When BASS and MIDRANGE equalizers R151 and R153 are centered, their sliders are at ground potential, and no equalization is produced.

Operation of the BASS control is very simple: C131 bypasses the junction of R147 and R149 to ground for high frequencies. Therefore, only low frequencies are passed on to the IC109b summing junction. When this network is connected towards the input (IC107a), a bass boost is produced; the reciprocal cut is produced as explained above.

The slider of the MIDRANGE control drives a proprietary bandpass resonator whose bandwidth ("Q") and tuning may be adjusted by controls R155 and R173 respectively without affecting the peak gain of the resonator. Signal is applied to the resonator through R155, 157, and the resonator output is applied to the summing junction of IC109b through R161, thus producing peak boost and cut by previous arguments.

The normal range of tuning of the resonator is 1.5 to 5.5 kHz as R173 is varied throughout its range. As the center frequency becomes higher, the "Q" increases. However, the range of R155 is such that a "Q" variation of 0.5 to 5.0 may be obtained for any setting of R173.

The equalized output of IC109b drives three further points. The first is the auxiliary output buffer/mixer IC107b. With the OUTPUT ATTEN control full clockwise, the gain is such that the reverberated output will predominate. However, the direct component is always passed with the same gain, and the reverberated component is variable down to zero by means of the OUTPUT ATTEN control, R143. C145 is a DC blocking capacitor.

The second driven point is the inverting, gain-of-one amplifier IC109a. Together, IC109b and IC109a drive the two ends of the primary of the output transformer T101 in a bridge configuration: the two ends of the primary are driven by equal but out-of-phase voltages, thus increasing the output power capability of the circuit. Typical output power into 600 ohms at T101's secondary is +20 dBm at clipping.

Power Supply:

The AC line can be connected to the power transformer for either 115 or 230 volt AC power by jumpering several lugs according to the installation instructions.

The power transformer T301 is equipped with a center-tapped secondary and the output is rectified by fullwave rectifier diode pairs D301, 303, and D302, 304. Unregulated voltages of ±22 volts DC are produced into storage capacitors C301 and C302.

The ±15 volt DC regulated voltages are produced by "three-terminal" voltage regulators IC301, 302. These devices contain protective circuits which initiate shutdown in the case of excessive output current demand or excessive chip temperature. Therefore, absence of regulated voltage does not necessarily mean that the power supply is defective, and possible causes of excessive current demand elsewhere in the circuit should be investigated as well. Normal current consumption is approximately ±100 ma.

C303, 304 frequency-compensate IC 301, 302 to prevent high-frequency oscillations. D305, 306 protect the rest of the circuitry from reverse polarity, such as might occur during power shut-down, or if either IC301 or IC302 were to fail. +12.6 volts DC for the module is provided by a string of three series dropping-diodes, D307-309. C309, 310 provide bypassing for the +12.6 volt source.

Spring Assembly:

Excitation of the spring in the torsional mode is performed by an electrodynamic driver coil. The torsional waves travel to the opposite ends of the spring. Most of the energy is reflected; a small amount is absorbed by an electrodynamic pickup transducer. The reflected energy continues to bounce back and forth between the two ends of the spring, slowly decaying. In this way, the time delays and exponential decay of natural reverberation are simulated.

The pickup transducer has been fitted with a mu-metal shield in order to reduce its susceptibility to hum pickup.

There are six springs per channel, each with a slightly different delay between 30 and 40 miliseconds.

If a defect in the spring assembly seems audible, the best test for the user is to compare the defective assembly with the other channel. Subtle defects in the spring assembly are unusual. Rough handling may result in the unhooking of the springs from their mounts. They may usually be reconnected without any other problem.

If a spring assembly is proven defective, a replacement assembly must be ordered from the factory, as springs must meet stringent factory specifications.

FACTORY SERVICE

Factory service is available throughout the life of the 111B/1. During the warranty period no charge will be made for parts or labor, subject to warranty conditions. After expiration of the warranty, a reasonable charge will be made for parts, labor, and packing. In any event, transportation charges (which are usually quite nominal) shall fall on the customer.

Before returning any unit for repair, please write or telephone for instructions, stating the trouble experienced. Often a problem can be solved by consultation, saving everyone the delay, inconvenience, and expense of actually returning the unit.

SHIPPING INSTRUCTIONS

If the original packing material is available, it should be employed. Otherwise, a carton of at least 200 pounds bursting test should be obtained which is no smaller than 22 x 15 x 9 inches.

The assembly should be packed so that there is at least 1-1/2" of packing material protecting every point. Cushioning material such as Air-Cap, Bubble-Pak, foam "popcorn", or fibre blankets are acceptable. Folded newspaper is not suitable. Blanket-type material should be tightly wrapped around the assemblies and taped in place to prevent the unit from shifting out of its packing and contacting the walls of the carton.

The carton should be packed evenly and fully with the packing material filling all voids such that the unit cannot shift in the carton. Test for this by closing but not sealing the carton and shaking vigorously. If the unit can be heard or felt moving, use more packing.

The carton should be well-sealed with 3" reinforced sealing tape applied across the top and bottom of the box in an "H" pattern. Narrower or parcel-post type tapes will not withstand the stresses applied to commercial shipments.

The package should be marked with the name of the shipper and the words, in red, DELICATE INSTRUMENTS, FRAGILE! Even so, the freight people will throw the box around as if it were filled with junk. The survival of the unit depends almost solely on the care taken in packing!

APPENDIX A: ALIGNMENT PROCEDURE

The 111B/1 DOES NOT REQUIRE PERIODIC ALIGNMENT. The only time alignment should be attempted is when a part has been replaced in the limiter or driver circuitry, or if either power supply regulator, IC301, 302 is replaced.

Equipment Required:

VTVM, 10 megohm input impedance
Low-distortion audio oscillator
(Heath IG-72, Eico 378)

AC VTVM and harmonic distortion analyzer
(HP 333A)

NOTE: These instructions refer to the left channel. Procedure for the right channel is identical, using right channel trimmers and test points.

1. Connect oscillator to input of 111B/1. Set INPUT ATTEN (R101) at "0". Connect distortion meter to the junction of R115 and R121 (TP-1 -- See the parts layout at the end of this manual for test points and trimmer locations). Connect scope to output of distortion meter. Connect VTVM to read voltage between ground and the gate of Q103. Turn "FIXED/FLOATING" switch to "FLOATING".

2. With the oscillator turned off, adjust R181 (offset) until the VTVM reads about +0.5 volts. Back R181 off slowly until the VTVM starts to indicate that the voltage is going negative. Move R181 slightly more counter-clockwise than this and leave it there.

3. Adjust the INPUT ATTEN (R101) to 5.0. Set the "FIXED/FLOATING" switch to "FIXED". Connect the oscilloscope so that the waveform at the junction of R115 and R121 can be observed. Turn R183 (bias) full counter-clockwise and briefly apply a 300 Hz, 0 dBm input to the 111B/1. Lower the oscillator output to -30 dBm. Slowly rotate R183 clockwise until the level at TP-1 stops rising. Increase the oscillator ouput to 0 dBm, and rotate R183 further clockwise until the waveform just starts to clip. Back off slightly, but make sure that you do not go so far clockwise that the level starts to fall with a -30 dBm input.

4. Apply a 5 kHz, 0 dBm signal to the 111B/1 input. Measure the harmonic distortion at the junction of R115 and R121, monitoring the distortion waveform (at the output of the distortion meter) with the scope. Adjust R119 (distortion null) for minimum distortion. The waveform will be somewhat obscured by noise. If a 30-18,000 Hz bandpass filter (Fig. 1) is available, connect it before the input of the distortion meter. If the bandpass filter is used, the distortion should be 0.1-0.2%. Otherwise, the distortion reading will be obscured by noise.

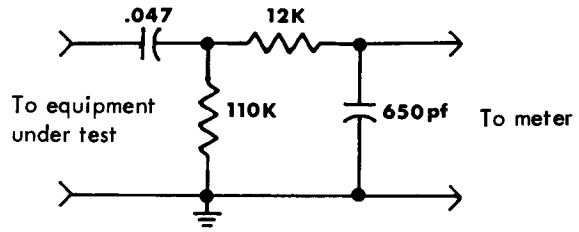

Fig. 2: 30-18,000 Hz Bandpass Filter

NOTE: In order to increase the effectiveness of the limiter in ducking out transients, the control loop has been purposely designed to be somewhat underdamped. Therefore, a small amount of sawtooth amplitude modulation of the envelope of a sinewave test signal is normal when testing the limiter circuit with tone. While this may seem deleterious, it in fact improves the effectiveness of the limiter with program material in this particular application.

APPENDIX B: SPECIFICATIONS

NOTE: These specifications are included solely as a guide to service personnel. Unless specifically stated that values are maximum or minimum, all specifications are typical, and are not guaranteed.

Number of Channels: Two, entirely independent except for power supply.
Reverberation Element: Six spring array (per channel).
Frequency Response: See Fig. 3
Decay Time: See Fig. 3.

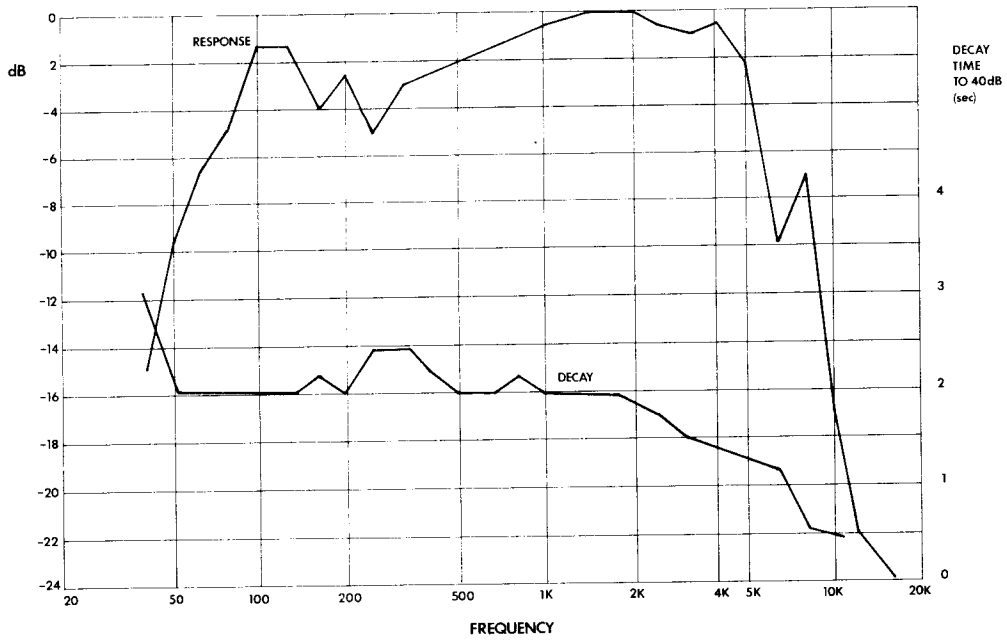

Fig. 3

Delay Time: Approximately 30 milliseconds between direct sound and first reflection.

Input Level: Will accept input levels between -30 and +4 dBm. Audio taper input level attenuator available on front panel. Limiter will control overloads up to 25 dB above limiting threshold before clipping and distortion occur.

Input Impedance: 10,000 ohms, unbalanced. Source impedance non-critical

Output Level: Nominally 0 dBm, adjustable by front panel control, +20 dBm clipping level allows adequate headroom for equalization and spring resonances.

Output Impedance: 600 ohms; transformer-coupled; balanced and floating.

Limiter Attack Time: Less than 100 microseconds.

Limiter Release Time: Dual time-constant circuit adjusts release time as a function of the program.

Compression Ratio (FIXED mode): Greater than 10:1.

Limiter-Induced Harmonic Distortion (@5 kHz): Less than 0.2%.

Limiter Element: Junction Field-Effect Transistor.

Bass Equalizer:

Type: Shelving.

Turnover Frequency: 500 Hz.

Equalization Range: ±12 dB, reciprocal.

Midrange Equalizer

Type: Quasi-parametric peaking.

Peaking Frequency: Continuously variable, 1.5 to 5.5 kHz.

Equalization Range: Continuously variable, ±12 dB, reciprocal.

Bandwidth Range: Can adjust "Q" from 0.5 to 5.0 with any setting of TUNING control.

Control Interaction: TUNING and EQUALIZATION controls also vary "Q". Otherwise, all controls are independent and non-interacting.

Weighted System Signal/Noise Ratio: Better than 76 dB.

Indicators:

POWER ON pilot lamp.

LED automatically lights whenever limiter is in FIXED mode (one per channel).

Audio Connectors: Cinch-Jones 140-Y barrier strip (#5 screw).

Power Connector: "U-Ground" power cord to United States Standards

Power Requirements: 115/230 volt AC ±10%, 50-60 Hz, approximately 4 VA

Dimensions: 19" (48.3 cm) wide x 3-1/2" (8.9 cm) high x 12" (30.5 cm) deep.

Net Weight: 11-1/2 pounds (4.99 kg).

Shipping Weight: 13 pounds (5.90 kg).

Parts List

Parts are listed by part class by assembly in Reference Designator order except for certain widely used common parts such as:

Fixed Resistors, 3/8" Square Trimmer Resistors, Signal Diodes

which are described generally under the appropriate heading and which must be examined to determine the exact value.

DIODES

ALL DIODES NOT LISTED BY REFERENCE DESIGNATORS ARE:

Diodes, Signal	22101-000	FSC 1N4148	MANY

NOTE: This is a silicon small-signal diode, ultra fast recovery, high conductance. It may be replaced with 1N914 or, in Europe, with BAY-61.

BV: 75V min. @ I_r = 5V I_r : 25nA max. @ V_r = 20V V_f : 1.0V max. @ I_f = 100mA t_{rr} : 4ns max.

NOTE: For Zener Diodes (VR...) see Miscellaneous Section

RESISTORS

ALL COMMON RESISTORS NOT SPECIFICALLY LISTED ARE GENERALLY SPECIFIED BELOW:
Replace resistors only with the same style and with the exact value as marked on the resistor body, lest performance or stability be compromised. If the resistor is damaged, consult the factory or refer to the Schematic to obtain the value.

Metal Film Resistors

Body: conformally-coated
I.D: five color band or printed value
Orban P/N: 20038-XXX - 20045-XXX
Power Rating: 1/8 Watt @ 70°C
Tolerance: 1%
Temperature Coefficient: 100 PPM/°C
U.S. Military Spec.: MIL-R-10509, Style RN55D
Manufacturers: R-Ohm (CRB-1/4FX), TRW/IRC, Beyschlag, Dale, Corning, Matsushita

Carbon Film Resistors

Body: conformally-coated
I.D.: four color bands
Orban P/N: 20001-XXX
Power Rating: 1/4 Watt @ 70°C
Tolerance: 5%
Manufacturers: R-Ohm (R-25), Piher, Beyschlag, Dale, Phillips, Spectrol, Matsushita

Carbon Composition Resistors

Body: molded phenolic
I.D.: four color bands
Orban P/N: 2001X-XXX
Power Rating: (70°C) 1/4 Watt (Body 0.090" x 0.250")
1/2 Watt (Body 0.140" x 0.375")
Tolerance: 5%
U.S. Military Spec.: MIL-R-11, Style RC-07 (1/4W) or RC-20 (1/2 W)
Manufacturers: Allen-Bradley, TRW/IRC, Stackpole, Matsushita

Cermet Trimmer Resistors

Body: 3/8" square (9mm)
I.D.: printed marking on side
Orban P/N: 20510-XXX, 20511-XXX
Power Rating: 1/2 Watt @ 70°C
Tolerance: 10%
Temperature Coefficient: 100 PPM/°C
Manufacturers: Beckman (72P, 68W- Series), Spectrol, Matsushita

OBTAINING SPARE PARTS

Because special or subtle characteristics of certain components are exploited in order to produce an elegant design at a reasonable cost, it is unwise to make substitutions for listed parts. It is also unwise to ignore notations in the Parts List indicating "Selected" or "Realignment Required" when replacing components. In such cases, the factory should be consulted if optimum performance is to be maintained.

Orban normally maintains an inventory of tested, exact replacement spare parts to supply any present or normal future demand quickly at nominal cost.

When ordering parts from the factory, we will need all of the following information:

- The Orban Part Number, if ascertainable
- The Reference Designator for a defective component
- A brief description of the part

-From the Serial Label on the rear
-The exact Model Number
-The Serial Number
-The "M" number, if any

Orban can supply standardized Spare Parts Kits for this product during its production life. Consult your dealer or the factory for the contents of such kits and their prices.

Parts for this unit have been chosen from the catalogs of well-known manufacturers for ease in future maintenance. The U.S. headquarter addresses are listed at the end of the Parts List. Most manufacturers have extensive distribution facilities throughout the world and may often be contacted through local offices.

P/L Rev. 02 1/86

REF DES	DESCRIPTION	ORBAN P/N	VEN (1)	VENDOR P/N	ALTERNATE VENDORS (1)	NOTES
CHASSIS ASSEMBLY						
Capacitors						
C149,150	Ceramic Disc, 1KV, 10%; 0.001uF	21112-210	CRL	DD-102	MUR	
Diodes						
D103,104	LED, Red	25103-000	GI	MV-2150A4		
Miscellaneous						
I301	Lamp, Neon	25201-000				Vendor: Industrial Devices, Inc.
NONE	Line Cord, AC, 3 Wire	28101-000	BEL	17534		
NONE	Fuse, 3AG, Slo-Blo, 1/8A	28004-113	LFE	313.125	BUS	
NONE	Transformer, Power, 36VCT, 7VA	29005-000				
Resistors						
R101,102	Pot, Conc., 10K/500K, 5020 (CCW Log)	20711-000				
R143,144	Pot, Conc., 10K/500K, 5020 (CCW Log)	20711-000				
R151-154	Pot, 25K, 5050 (Linear)	20713-000				
R155,156	Pot, Concentric, 100K/100K, (CCW Log)	20712-000				
R173,174	Pot, Concentric, 100K/100K, (CCW Log)	20712-000				
Switches						
S101,102	Switch, Toggle, Min., SPDT	26037-001	CK	7101		
S301	Switch, Toggle, SPST, AC Power, White	26002-001	CH	8280K21C		
PCB MAIN ASSEMBLY						
Capacitors						
C101,102	Ceramic Disc, 3V, 0.47uF	21101-447	CRL	UK-474	DIL	
C103,104	Tantalum, 35V, 10%; 4.7uF	21307-547	SPR	196D475X9035JA1	MANY	
C105,106	Polyester, 100V, 10%; 0.0068uF	21401-268	SPR	225P68291WD3	PAN	
C107,108	Tantalum, 10V, 10%; 100uF	21303-710	SPR	196D107X9010PE4	MANY	
C109,110	Mica, 500V, 5%; 200pF	21020-120	CD	CD15-FD201J03	SAN	
C111,112	Mica, 500V, +1/2pF -1/2pF; 6pF	21017-006	CD	CD15-CD060D03	SAN	
C113,114	Ceramic Disc, 25V, 20%; 0.01uF	21106-310	CRL	UK25-103	MUR	
C115,116	Mica, 500V, 5%; 820pF	21024-182	CD	CD19-FD821J03	SAN	
C117,118	Tantalum, 35V, 10%; 1uF	21307-510	SPR	196D105X9035HA1	MANY	
C119,120	Mica, 500V, 5%; 1000pF	21024-210	CD	CD19-FD102J03	SAN	
C121,122	Polyester, 100V, 10%; 0.0033uF	21401-233	SPR	225P33291WD3	PAN	
C123,124	Tantalum, 20V, 10%; 10uF	21305-610	SPR	196D106X9020JA1	MANY	
C125,126	Ceramic Disc, 25V, 20%; 0.1uF	21106-410	CRL	UK25-104	MUR	
C127,128	Polyester, 100V, 10%; 0.0022uF	21401-222	SPR	225P22291WD3	PAN	
C129,130	Polyester, 100V, 10%; 0.015uF	21401-315	SPR	225P15391WD3	PAN	
C131,132	Polyester, 100V, 10%. 0.22uF	21401-422	SPR	225P22491XD3	PAN	
C133,134	Polyester, 100V, 10%; 0.0056uF	21401-256	SPR	225P56291WD3	PAN	

FOOTNOTES:

(1) See last page for abbreviations
(2) No Alternate Vendors known at publication
(3) Actual part is specially selected from part listed, consult Factory
(4) Realignment may be required if replaced, see Circuit Description and/or Alignment Instructions

SPECIFICATIONS AND SOURCES FOR REPLACEMENT PARTS

DUAL REVERB MODEL 111B/1

CHASSIS ASSEMBLY: Capacitors Diodes/Misc/Resistors/Switches

PCB MAIN ASSEMBLY: Capacitors

REF DES	DESCRIPTION	ORBAN P/N	VEN (1)	VENDOR P/N	ALTERNATE VENDORS (1)	NOTES
CAPACITORS, Cont'd						
C135,136	Polyester, 100V, 10%; 0.0022uF	21401-222	SPR	225P22291WD3	PAN,PAK	
C137-140	Tantalum, 15V, 10%; 22uF	21304-622	SPR	196D226X9015KE3	MANY	
C141-144	Tantalum, 35V, 10%; 1uF	21307-510	SPR	196D105X9035HA1	MANY	
C145,146	Tantalum, 6V, 10%; 47uF	21302-647	SPR	196D476X9006JA1	PAN	
C147,148	Mica, Selected, 500V, 5%		CD	CD15...		
C301,302	Alum., Axial, 40V, -10% +100%; 470uF	21224-747	SPR	TVA-1315-1000-40	SIE,PAN	
C303,304	Alum., Radial, 25V, -20% +100%; 100uF	21206-710	PAN	ECE-A1EV101S		
C305-308	Monolythic Ceramic, 50V, 20%; 0.1uF	21123-410	SPR	1C25Z5U104M050B		
C309	Alum., Radial, 35V, -20% +100%; 100uF	21207-710	SPR	502D107G035CG1C	PAN	
C310-312	Monolythic Ceramic, 50V, 20%; 0.1uF	21123-410	SPR	1C25Z5U104M050B		
Diodes						
D301-306	Diode, Rectifier, 400V, 1A	22201-400	MOT	1N4004	MANY	
Integrated Circuits						
IC101,102	Linear, Dual Opamp	24206-202	TI	TL072CP	NAT(LF353H)	
IC103,104	Linear, Single Opamp	24001-202	NAT	LM709CN	RAY,TI	
IC105	Linear, Dual Opamp	24204-301	NAT	LM381AN	SIG	
IC106-109	Linear, Dual Opamp	24206-202	TI	TL072CP	NAT(LF353H)	
IC301	D.C. Regulator, 15V Positive	24304-901	FSC	78M15UC	TI	
IC302	D.C. Regulator, 15V Negative	24303-901	FSC	79M15AUC	TI	
Miscellaneous						
T101,102	Transformer, Output, 1:1	29102-000		TA-52		Vendor: Stancor
Modules						
A101	Module Assy, Limiter Module	30105-000				
A102,103	Module Assy, Equalizer Module	30110-000				
Resistors						
R119,120	Trimpot, 1 Turn, 1 Meg; 20%	20501-510	ME	8080NMT105		
R181,182	Trimpot, 1 Turn, 47K; 20%	20501-347	ME	8080NMT473		
R183,184	Trimpot, 1 Turn, 4.7K; 20%	20501-247	ME	8080NMT472		
Transistors						
Q101,102	Transistor, Signal, NPN	23202-101	MOT	2N4400	FSC	
Q103,104	Transistor, JFET/N	23403-101	NAT	J111	INS	

P/L Revisions: Chassis Assembly 06011-000-09
PCB Main Assembly 30100-000-11

FOOTNOTES:
(1) See last page for abbreviations
(2) No Alternate Vendors known at publication
(3) Actual part is specially selected from part listed, consult Factory
(4) Realignment may be required if replaced, see Circuit Description and/or Alignment Instructions

SPECIFICATIONS AND SOURCES FOR REPLACEMENT PARTS
DUAL REVERB MODEL 111B/1

PCB ASSEMBLY:
Capacitors/Diodes/ICs/ Miscellaneous
Modules/Resistors/Transistors

Vendor Codes

AB Allen-Bradley Co.
1201 South Second Street
Milwaukee, WI 53204

AD Analog Devices, Inc.
Route 1, Industrial Park
P.O. Box 280
Norwood, MA 02062

AM Amphenol North America
An Allied Company
2122 York Road
Oak Brook, IL 60521

BEK Beckman Instruments, Inc.
Helipot Division
2500 Harbor Blvd.
Fullerton, CA 92634

BEL Belden Corporation
Electronic Division
Richmond, IN 47374

BRN Bourns, Inc.
Trimpot Products Division
1200 Columbia Avenue
Riverside, CA 92507

BUS Bussmann Manufacturing Div.
McGraw-Edison Company
P.O. Box 14460
St. Louis, MO 63178

CD Cornell-Dubilier Electronics
150 Avenue "L"
Newark, NJ 07101

CH Cutler-Hammer
Landmark Office Center
2081 Landings Drive
Mountain View, CA 94043

CK C & K Components, Inc.
15 Riverdale Avenue
Newton, MA 02158

COR Corcom, Inc.
1600 Winchester Road
Libertyville, IL 60048

CRL Centralab, Inc.
A North American Company
5757 North Green Bay Ave.
Milwaukee, WI 53201

CTS CTS Corporation
905 North West Blvd.
Elkhart, IN 46514

ECI Electrocube
1710 South Del Mar Avenue
San Gabriel, CA 91776

ERE Erie Tech. Products, Inc.
644 West Twelfth Street
Erie, PA 16512

EXR Exar Integrated Systems, Inc.
P.O. Box 62229
Sunnyvale, CA 94088

FDY F-Dyne Electronics Company
449 Howard Avenue
Bridgeport, CT 06605

FSC Fairchild Camera & Instr. Corp.
464 Ellis Street
Mountain View, CA 94042

GI General Instruments
Optoelectronics Div.
3400 Hillview Avenue
Palo Alto, CA 94304

HP Hewlett-Packard Corporation
1501 Page Mill Road
Palo Alto, CA 94304

INS Intersil, Inc.
10710 North Tantau Avenue
Cupertino, CA 95014

IRC TRW/IRC Resistors
401 North Broad Street
Philadelphia, PA 19108

LFE Littelfuse
A Subsidiary of Tracor
800 East Northwest Highway
Des Plaines, IL 60016

MAL Mallory Timers Company
Emhart Electrical/Electronic Gr.
3029 East Washington Street
Indianapolis, IN 46206

ME Mepco/Electra, Inc.
Columbia Road
Morristown, NJ 07960

MIL J.W. Miller Division
Bell Industries
19070 Reyes Avenue
P.O. Box 5825
Compton, CA 90221

MOT Motorola, Inc.
P.O. Box 20912
Phoenix, AZ 85036

NAT National Semiconductor Corp.
2900 Semiconductor Drive
Santa Clara, CA 95051

NOB Noble
Teikoku Tsushin Kogyo Co. Ltd.
335, Kariyado, Nakahara-ku
Kawasaki 211, JAPAN

OHM Ohmite Manufacturing Company
A North American Philips Co.
3601 Howard Street
Skokie, IL 60076

ORB Orban Associates, Inc.
645 Bryant Street
San Francisco, CA 94107

PAK Paktron
Div. of Illinois Tool Works Inc
900 Follin Lane, S.E.
Vienna, VA 22180

PAN Panasonic
Electronic Components Div.
P.O. Box 1503
Seacaucus, NJ 07094

RAY Raytheon Semiconductor Division
350 Ellis Street
Mountain View, CA 94042

RCA RCA Solid State Division
Route 202
Somerville, NJ 08876

SAE Stanford Applied Eng.
340 Martin Avenue
Santa Clara, CA 95050

SCH ITT Schadow, Inc.
8081 Wallace Road
Eden Prairie, MN 55343

SIE Siemens
Components Division
186 Wood Avenue, South
Iselin, NJ 08830

SIG Signetics Corporation
A Sub. of US Philips Corp.
P.O. Box 9052
Sunnyvale, CA 94086

SPR Sprague Electric Co
125 Marshall Street
North Adams, MA 01247

STK Stackpole Components Co
P.O. Box 14466
Raleigh, NC 27620

SYL Sylvania Conn. Prod. Op.
GTE Products Corp.
Box 29
Titusville, PA 16354

TI Texas Instruments
P.O. Box 225012
Dallas, TX 75265

WES Westlake
5334 Sterling Ctr Drive
Westlake Village, CA 91361

WIM WIMA
P.O. Box 2345
Augusta-Anlage 56
D-6800 Mannheim 1
GERMANY

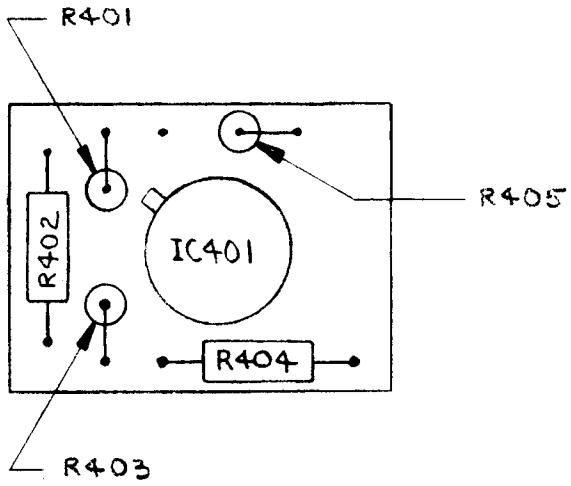

orban	Orban Associates Inc.
TITLE:	ASSEMBLY DRAWING EQ MODULE 30110-000-03

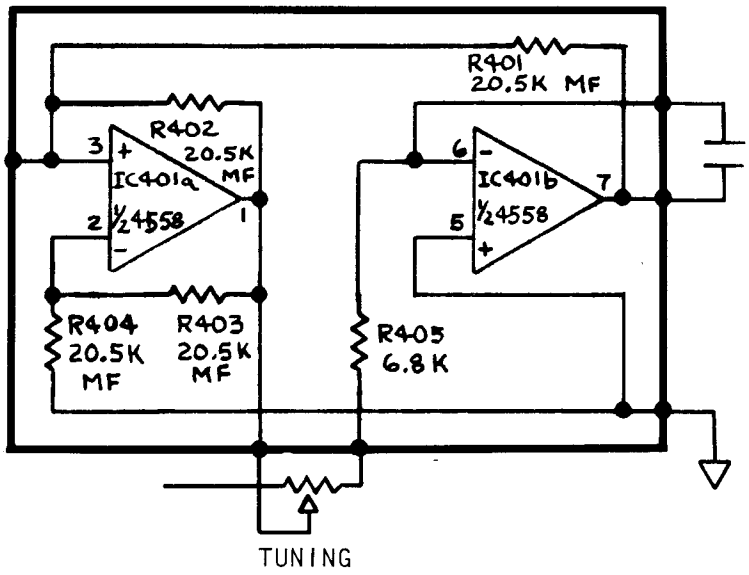

orban	Orban Associates Inc.
TITLE:	SCHEMATIC EQ MODULE 60012-000-05

PARTS LIST, EQ MODULE

IC401	24202-202	IC DUAL OPAMP, RC4558NB
R401-R404	20042-205	RES MF, 1/8W, 1% 20.5K
R405	20001-268	RES CF, 1/4W, 5% 6.8K

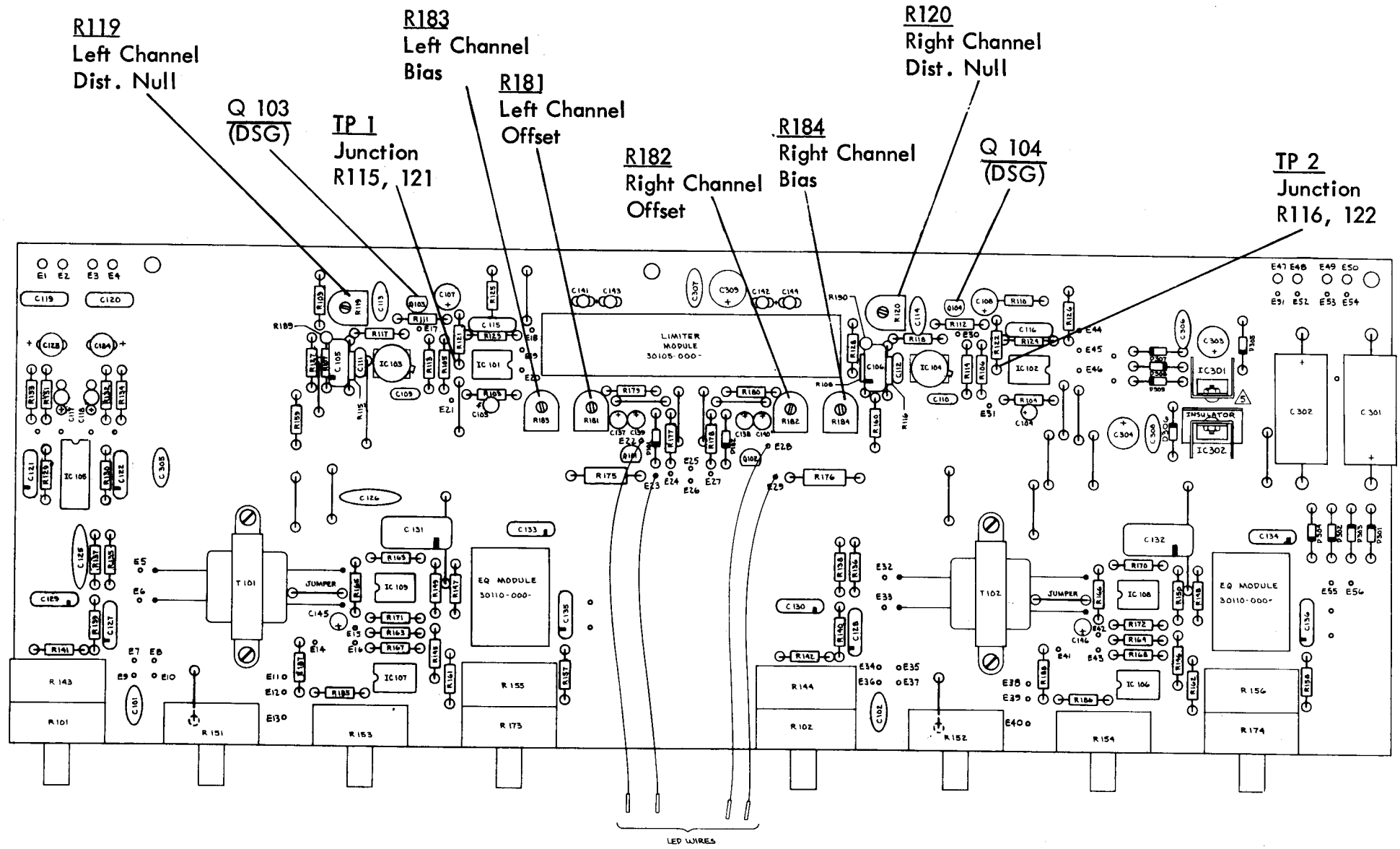

1. TACK SOLDER C311 AND C312, .05/25, BETWEEN PINS 4 AND 9 OF IC103 AND IC104 ON SOLDER SIDE OF PCB.
NOTES:

orban Orban Associates Inc.

TITLE:
ASSEMBLY DRAWING
MODEL 111B/1
30100-000-11

LEFT CHANNEL IN

RIGHT CHANNEL IN

IN ATTN

LIMITER MODULE
(PROPRIETARY)

A101
LIMITER MODULE
P/N 30105-000-

EQ MODULE
(See Separate Dwg)

A102
EQ MODULE
P/N 30110-000-

A103
EQ MODULE
P/N 30110-000-

SP1

SP2

RV101,103

RV102,104

DIST NULL

OUT ATTN

BASS

MIDRANGE

BANDWIDTH

TUNING

FIXED

FLOATING

OFFSET

BIAS

LEFT MIXED OUT

LEFT DIRECT OUT

RIGHT MIXED OUT

RIGHT DIRECT OUT

LOCAL BYPASS

POWER PINS	+15	-15
581	9	
709	7	4
TL072	8	4

orban Orban Associates Inc.

TITLE: SCHEMATIC
MODEL 111B/1
60012-000-05